



WASTEWATER TREATMENT PLANT PRELIMINARY ENGINEERING REPORT





City of West University Place

West University Place, Texas
August 2022
067812102

PREPARED BY
Kimley»Horn

Kimley-Horn and Associates, Inc.
TBPE Firm Registration: F928
11700 Katy Freeway, Suite 800
Houston Texas, 77079

Title

Preliminary Engineering Report for Improvements at Wastewater Treatment Plant

Site Name

AUGUST 2022
PROJECT NUMBER: 067812102

Prepared for:

City of West University Place

Prepared by:

Kimley»Horn

Contents

Section 1 Executive Summary 7
Section 2 WWTP Description 9
2.1 WWTP Discharge Permit Limits 9
2.2 WWTP Location 9
Section 3 Reasons to Upgrade the WWTP 12
3.1 Comparison of Improvement Reasons And Projects 12
3.2 Age and Condition 13
3.3 Flood Protection and Resiliency 14
3.4 Safety Improvements 18
3.5 Operation & Maintenance Cost Savings 19
3.6 Regulatory Compliance 19
Section 4 Equipment Selection 21
4.1 Proposed Equipment Selection 21
Section 5 Master Plan Findings 25
5.1 Equipment Evaluation 25
5.2 Existing WWTP Process Documentation 28
5.3 Solids Handling System 35
5.4 Non-Potable System 38
5.5 Electrical System 40
5.6 Recommended Process Operation 44
Section 6 Analysis Since the Master Plan 50
6.1 Survey 50
6.2 Geotechnical Study 51
6.3 Hydraulic Analysis and Floodplain Permitting 53
Section 7 Structural Design 56
7.1 Design Criteria 56
7.2 Geotechnical Considerations 59
7.3 Structural Assessment 60
7.4 Structural Rehabilitation/Repair Recommendations 69
7.5 Structural Design of New Control Building 70
7.6 Structural Design of Other Proposed Structures 74
Section 8 Electrical Design 77
8.1 Existing Electrical Infrastructure 77
8.2 Proposed Electrical Infrastructure Improvements 80
8.3 Electrical Design Criteria 82
Section 9 Architectural Design 84
9.1 Architectural Program 84
9.2 Building Materials 86

9.3 Operations Building Location Options 88
Section 10 Proposed Projects 93
10.1 Proposed Projects 93
10.2 Proposed Hydraulic Profile 96
10.3 Opinions of Probable Construction Cost 96
10.4 Project Sequencing 97
10.5 Project Schedule 98

Appendix A: Selected Record Drawings

Appendix B: IDS Flood Study

Appendix C: Equipment Technical Data

Appendix D: Process Flow Diagrams

Appendix E: Site Layout Exhibit

Appendix F: Survey Exhibit

Appendix G: Geotechnical Report

Appendix H: Hydraulic Model Output

Appendix I: Electrical Diagrams

Appendix J: Hydraulic Profile

Appendix K: Opinions of Probable Construction Cost

Appendix L: Sequencing Plan

Figures

Figure 1: Location of Proposed Improvements 7
Figure 2: Location of WWTP Relative to City Limits 10
Figure 3: WWTP Aerial Photograph 11
Figure 4: FEMA Map 15
Figure 5: Approximate Flood Level at MCC 16
Figure 6: Site Layout 25
Figure 7: Existing Process Flow Diagram 27
Figure 8: Contact Stabilization Process 45
Figure 9: Complete Mix Activated Sludge Process 45
Figure 10: Existing Flow Pattern Schematic 47
Figure 11: Proposed Flow Pattern Schematic 48
Figure 12: Proposed Process Flow Diagram 49
Figure 13: Portion of Windrose Survey Exhibit 51
Figure 14: Geotechnical Bore Locations 53
Figure 15: Clarifier No. 2 Foundation 63
Figure 16: Shrinkage Cracking 63
Figure 17: Diagonal Cracks at Wall Intersection 64
Figure 18: Vertical and Diagonal Crack Clarifier No. 1 65
Figure 19: Cracking at Effluent 65
Figure 20: Vertical Cracking at Effluent 65
Figure 21: View of Existing Control Building Roof 67
Figure 22: Concrete Spall at Column 68
Figure 23: Corrosion at Building Girts 69
Figure 24: Opening at Overhead Door 69
Figure 25: Control Building West Location Rendering 87
Figure 26: West Option Layout for Admin Building 88
Figure 27: West Option Floor Plan 89
Figure 28: Control Building East Option Rendering 90
Figure 29: Site Plan East Option 91
Figure 30: East Option Floor Plan 92
Figure 31: Proposed Hydraulic Profile 96
Figure 32: Proposed Project Schedule 99

Tables

Table 1: Capital Improvement Projects Summary 8
Table 2: Discharge Permit Effluent Limits 9
Table 3: Comparison of Improvement Reasons and Projects 12
Table 4: Existing Equipment Impacted by Harvey and Not Compliant 16
Table 5: Resiliency Study Recommendations for Raising Equipment 17
Table 6: Equipment Selection 21
Table 7: Existing Basin Geometry Calculations 28
Table 8: Geotechnical Bore Summary 51
Table 9: Storm Event Flow Information 54
Table 10: 100-Year WSEL Comparison 55
Table 11: Cast-in-Place Concrete 57
Table 12: Steel, Aluminum, Miscellaneous Metal, and Anchors 57
Table 13: Mechanical and Electrical Component Weight 58
Table 14: Live Loads 58
Table 15: Geotechnical Parameters 59
Table 16: Lighting Levels and Fixture Types 83
Table 17: Control Building Space Programming 85
Table 18: Summary of Opinions of Probable Construction Cost 97

SECTION 1 EXECUTIVE SUMMARY

The City of West University Place, Texas is the owner and operator of a wastewater treatment plant (WWTP) located at 2801 North Braeswood Boulevard. The WWTP requires significant upgrades to the equipment, process, electrical systems, and facilities.

Kimley-Horn and Associates, Inc. prepared this Preliminary Engineering Report (PER) to accomplish the following goals:

- describe the existing WWTP equipment and facilities.
- identify issues preventing the WWTP from performing as required, and
- describe capital improvement projects to achieve full operational capacity. These projects will improve the WWTP's operational effectiveness, improve resiliency against future flood events, improve efficiency for maintenance, increase safety for plant operators, and improve the ability of the WWTP to comply with state regulations.

Recommended projects include upgrading the biological treatment process, raising equipment and the control building above the flood plain, adding improved screening, and process additions to the plant. Figure 1 shows the general location of proposed improvements described within this PER. Detailed descriptions are shown within this PER.

Figure 1: Location of Proposed Improvements

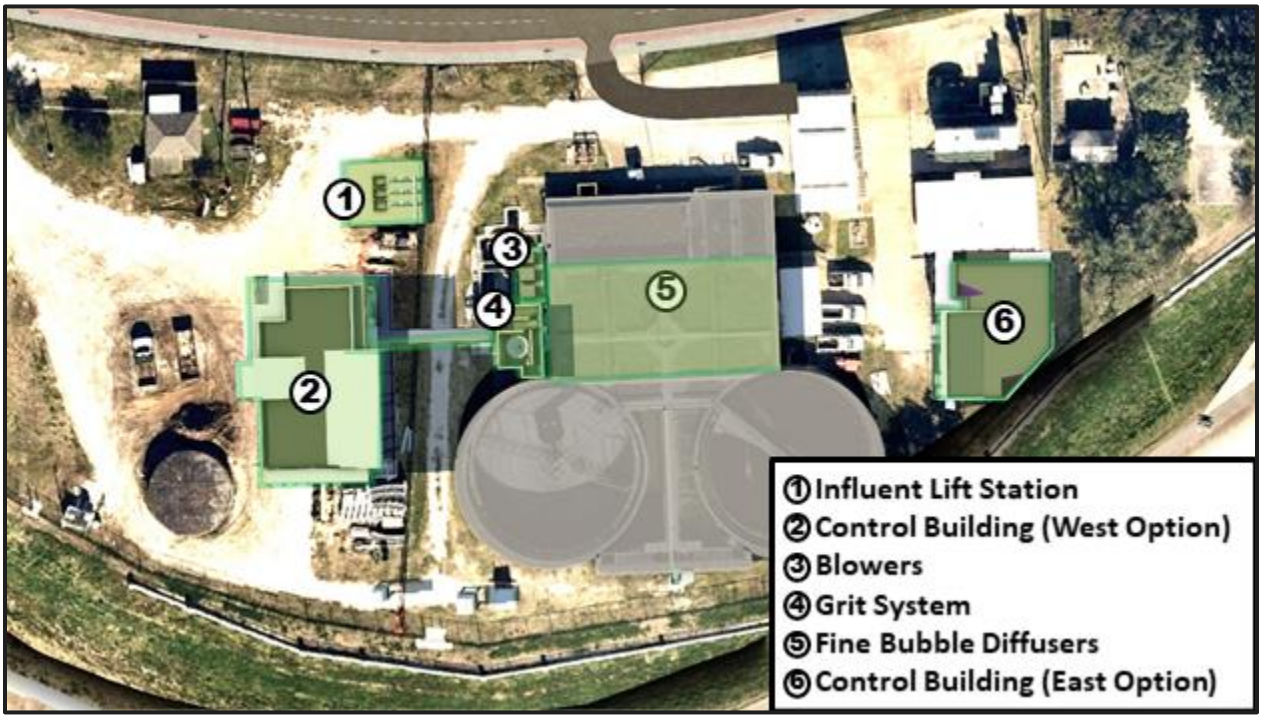

The following table summarizes the capital projects described in this PER. For consistency, the list uses the same project numbers as the 2020 Master Plan; missing projects were already completed between the master plan and this report.

Table 1: Capital Improvement Projects Summary

Project ID	Project Description	PER OPCC
P001	Electrical Power Service Improvements	$640,000
P002	Treatment Process Optimization with Fine Diffusers and Pumps	$3,116,000
P003	Motor Control Center and Controls	$1,201,000
P006	Disinfection Improvements	$405,000
P007	Replace Screw Pumps with Submersible Pumps	$1,532,000
P008	Mechanical Step Screen	$648,000
P009	Grit Chamber	$916,000
P010	Consolidated Operations and Maintenance Manual	$57,000
P011	Control Building	$2,843,000
P012	Site Work	$379,000
P013	WWTP Structural Improvements	$136,000
P014	Convert Thickener to Digester	$337,000
P015	Security Cameras	$39,000
P016	Non-potable Water System	$236,000
	Total	**$12,485,000**

Opinions of probable costs (OPCCs) in Table 1 include engineering or architectural design fees. OPCCs provided herein are based on the information known to consultant at this time and represent only the consultant's judgment as a design professional familiar with the construction industry. The consultant cannot and does not guarantee that proposals, bids, or actual construction costs will not vary from its opinions of probable costs. Project OPCCs in Table 1 are based on construction occurring in 2023. Assume annual escalation of 4% for each additional year for construction cost. The project OPCCs in this PER do not include probable costs for the reclaimed water system (including the filtration system, storage tank, pump systems, transmission pipeline, meters, and control valve). These costs are summarized in the City of West University Place Reclaimed Water Preliminary Engineering Report (Kimley-Horn, March 2022).

SECTION 2 WWTP DESCRIPTION

The City of West University Place Wastewater Treatment Plant (WWTP) was constructed in approximately 1982. The WWTP is permitted for an average daily flow of 2.0 million gallons per day (MGD) and a peak flow of 6.0 MGD.

2.1 WWTP DISCHARGE PERMIT LIMITS

The WWTP is permitted under the Texas Pollutant Discharge Elimination System (TPDES). The current permit expires on September 1, 2022. The WWTP is operated under the direction of a Class A Wastewater Treatment Operator, Mark Wahlstrom, license number WW0019186. The WWTP discharges through permitted outfall 001 to the south of the site to Brays Bayou, which is part of the Houston Ship Channel/Buffalo Bayou Tidal in Segment No. 1007 of the San Jacinto River Basin. Table 2 lists the current permitted plant effluent limits set by TCEQ.

Table 2: Discharge Permit Effluent Limits

Parameter	Daily Average Limit
Flow	2.0 MGD
Carbonaceous Biochemical Oxygen Demand (5-day)	10 mg/L 167 lbs/day
Total Suspended Solids	15 mg/L 250 lbs/day
Ammonia Nitrogen	Report
Total Kjeldahl Nitrogen	Suspended from Reporting Requirement
Total Silver	Report
E. coli	63 CFU (or MPN per 100 ml)
Chlorine Residual	Maximum 0.1 mg/L
Dissolved Oxygen	Minimum 4.0 mg/L

2.2 WWTP LOCATION

The WWTP is located south of the city limits, within the City of Houston, near Brays Bayou. The WWTP address is 2801 North Braeswood, Houston, Texas. Figure 2 shows the location of the plant in relation to the City of West University Place city limits boundary.

Figure 2: Location of WWTP Relative to City Limits

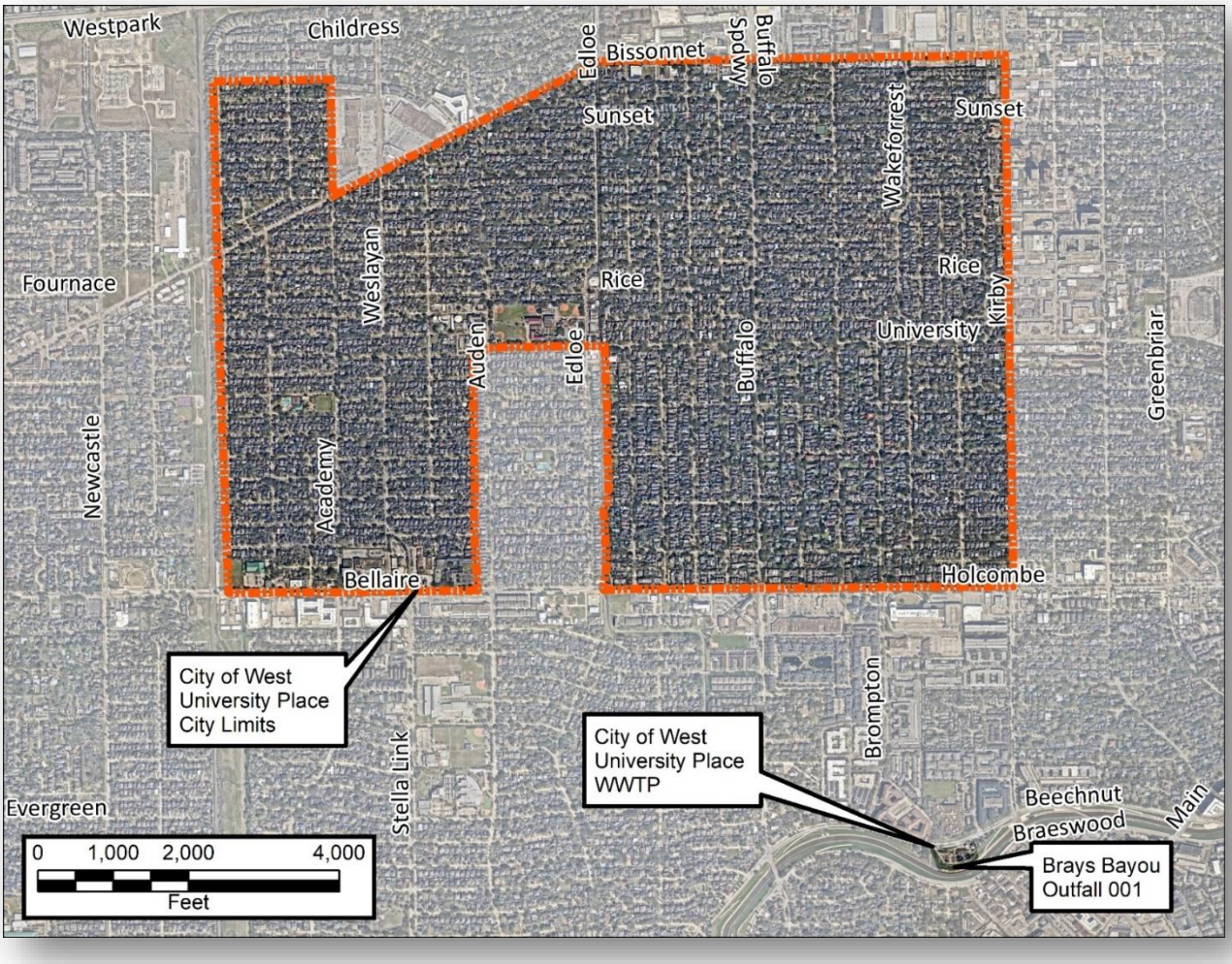

Figure 3 shows an aerial photograph of the WWTP parcel boundaries and the location of Outfall 001. The WWTP is located on a parcel which is approximately 3.7 acres total area.

Figure 3: WWTP Aerial Photograph

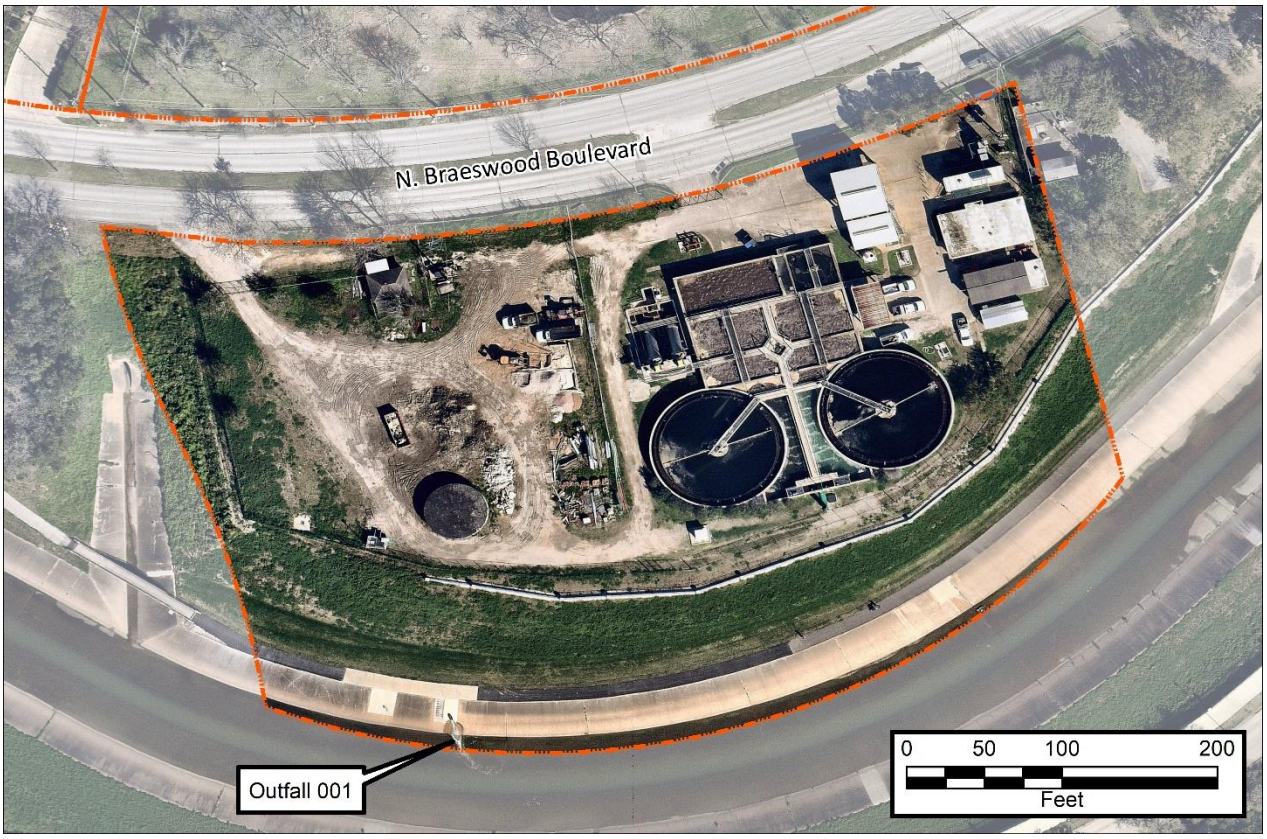

SECTION 3 REASONS TO UPGRADE THE WWTP

In this PER document, Kimley-Horn updates the description of issues and the need for upgrades presented in the Master Plan. The following five key reasons to upgrade the WWTP include:

1. Age and Condition
2. Flood Protection and Resiliency
3. Safety Improvements
4. Operation & Maintenance (O&M) Cost Savings
5. Regulatory Compliance

The following sections describe each reason in additional detail.

3.1 COMPARISON OF IMPROVEMENT REASONS AND PROJECTS

Based on the five reasons to improve the WWTP, the design team has described projects to address these issues. Most of these projects will address multiple issues within the WWTP. Table 3 provides a matrix to show which of the five reasons for upgrading the WWTP relates to a proposed improvement project described in this PER.

Table 3: Comparison of Improvement Reasons and Projects

Project ID	Project	1: Age and Condition	2: Flood Resiliency	3: Safety	4: O&M Cost Savings	5: Regulatory Compliance
P001	Electrical Power Service Improvements	✓	✓	✓		
P002	Treatment Process Optimization	✓	✓	✓	✓	✓
P003	Motor Control Center and Controls	✓	✓	✓	✓	
P006	Disinfection Improvements			✓		✓
P007	Submersible Lift Station		✓		✓	✓
P008	Mechanical Step Screen	✓		✓		
P009	Grit Chamber				✓	
P010	Consolidated Operations and Maintenance Manual				✓	✓
P011	Control Building	✓	✓	✓		
P012	Site Work	✓	✓			
P013	WWTP Structural Improvements	✓		✓		
P014	Convert Thickener to Digester			✓	✓	
P015	Security Cameras			✓		
P016	Non-Potable Water System Improvements	✓			✓	

3.2 AGE AND CONDITION

One reason for upgrading the WWTP is the age and condition of the existing equipment and facilities. The City built the current plant in 1982. Appendix A includes selected sheets from the record drawings prepared by Bayshore Engineers, Inc. Since this project, the City has performed three upgrade projects including the following projects:

- 2011 Belt Press Replacement and Generator
- 2017 Clarifier Upgrade
- 2021 Clarifier Replacement

The Master Plan identified the following equipment at the end of its expected service life:

- Coarse Air Drops: Corroded metal air pipes including multiple missing coarse air diffusers and non-functional valves in the aeration basins and digesters. This reduces the oxygen transfer efficiency of the coarse bubble system and requires operators to run the blowers at a high level to meet effluent limits.
- Influent Gates in the Aeration Basins: Most of the gates between the various aeration basins are inoperable. The gates have either corroded to the point that the gate can't be operated to open or close or they have been welded shut with a plate. This prevents operators from modifying the treatment process when required.
- Electrical Backup Generator: For backup power, the electrical service is connected to a 750 kW / 938 kVA diesel generator via the Automatic Transfer Switch (ATS). The generator is 10 years old with 10 years of design life left. The existing generator does not have capacity to operate the entire WWTP at full capacity.
- Structural Issues: Our structural engineer observed defects in some concrete structures in the WWTP. For example, the effluent box from the Chlorine contact basins has significant vertical and diagonal cracks at the wall corners and end walls. The vertical crack at the wall corner occurs in line with the crack on the inside face of the intersecting wall and beyond. This kind of crack indicated that the steel reinforcing at the wall corner is preventing the wall from pushing further outwards and falling; the concrete is not contributing. If the crack occurs through the entire wall depth, the steel reinforcing will be exposed to process fluids and will corrode over time. With enough section loss due to corrosion, the steel reinforcing will fail in tension and the wall will lose containment. Our

detailed structural section identifies several similar defects and describes proposed repairs including cost estimates.

3.3 FLOOD PROTECTION AND RESILIENCY

Flood protection is an important reason for upgrading the WWTP. Flooding within the plant could prevent the WWTP from operating normally and cause the WWTP effluent to violate the permit limits. Flood events can damage required equipment which prevents the WWTP from operating until the equipment can be repaired or replaced. This damage can be expensive and cause permit violations. According to Federal Emergency Management Agency (FEMA) maps, the WWTP is located withing the Brays Bayou floodway (Zone AE). Figure 4 shows the location of the WWTP in relation to the Brays Bayou floodplain and floodway.

Because the WWTP is located within the City of Houston, the structures are subject to regulations from both the City of Houston and Harris County Flood Control District. These rules require equipment to be located 3-feet above the 0.2% AEP (500-year floodplain). At the WWTP site, the 0.2% AEP elevation is 50.85-feet, therefore the City of Houston criteria is to locate equipment above the 53.85-feet elevation.

A significant portion of the existing equipment and facilities are below the criteria elevation. The following are below the criteria elevation: Electrical Service, Generator, Blowers, Chemical Feed System, Sludge Transfer Pumps, Influent Lift Station, Motor Control Center (MCC) in the existing control building, the dewatering sludge pumps, and the non-potable water system pumps. In 2017, Hurricane Harvey caused Brays Bayou water surface to rise into the WWTP parcel. The existing

Figure 4: FEMA Map

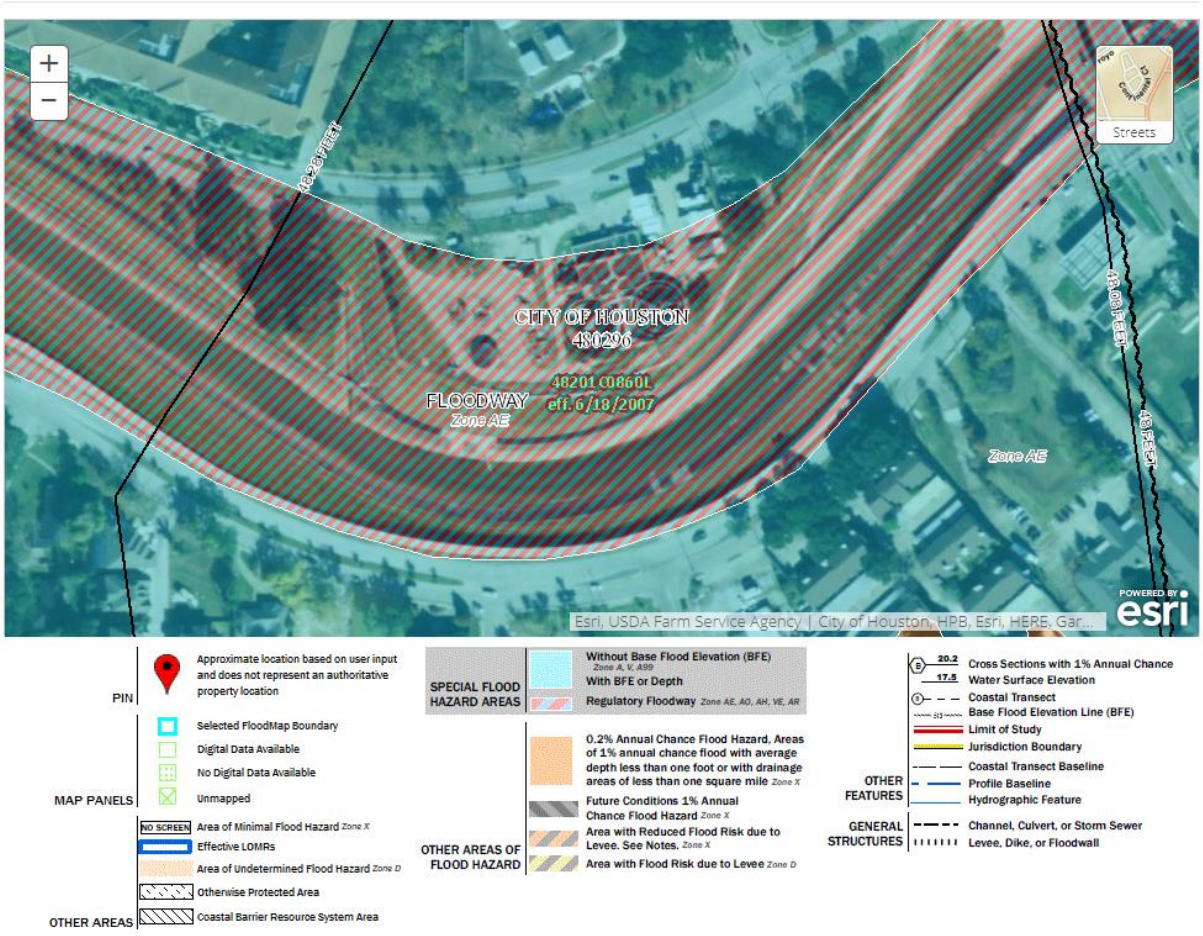

control building was flooded with 4 to 6 inches of water to approximately elevation 47.5-feet. The MCC was within a few inches of flood waters entering the cabinets and the related conduit. If flood waters had entered the conduits, the conductors would require significant rehabilitation and the WWTP would be out of service. The Operators were able to turn off equipment and protect critical facilities during Hurricane Harvey. A similar flood event in the future could cause significant damage to the WWTP especially to the electrical power system. The red line on Figure 5 shows the approximate Harvey flood level relative to the MCC.

Figure 5: Approximate Flood Level at MCC



In October 2020, IDS Engineering Group completed a WWTP Flood Resiliency Study. Appendix B includes the IDS Flood Resiliency Study. The WWTP Flood Resiliency Study identified existing equipment impacted by Hurricane Harvey floodwaters and equipment that does not meet current City of Houston and Harris County Flood Control District requirements. Table 4 copied from the IDS report summarizes the findings.

Table 4: Existing Equipment Impacted by Harvey and Not Compliant

Equipment Unit	Elevation *(Notes 1 & 2)* (ft)	Elevation Subject to Damage from Flooding (ft)	Operation Impacted by Hurricane Harvey Floodwaters	Meets Current Agency Requirements
Electrical Service	49.85-51.80	49.85-51.8	No	No
Bottom of Generator	52.77	52.77	No	No
Blower Equipment	49.58	52.77	No	No
Chemical Feed Equipment Finished Floor Elevation (FF)	46.67	50.6	No	No
Sludge Transfer Pumps	46.67	48.7	No	No
Influent Lift Station Top of Wall	46.67	46.67 *(See Note 3)*	Yes	No
Electrical Control Building FF	47.31	48.15	No	No
Belt Press FF	61.67	62.0	No	Yes
Dewatering Sludge Pumps FF	46.67	48.0	No	No
NPW Pumps and Screen	48.20	50.7	No	No
Top of WWTP Basin Walls	56.17	56.17	No	Yes

The red highlighted cells in Table 4 indicate that all the equipment is either potentially impacted by floodwaters or does not meet agency flood protection requirements. The Flood Resiliency Study recommends raising equipment above the 53.85-foot elevation. Table 5, copied from the IDS study, lists recommendations for raising specific equipment.

Table 5: Resiliency Study Recommendations for Raising Equipment

Equipment Unit	Mater Plan Recommendation	Additional Requirements
Electrical Service	Replace in Project P001/P003	Elevate Bottom of New Pad Mounted Transformer, Power Distribution Panel, Automatic Transfer Switch, and Main Circuit Breaker Panel to El. 53.85'
Generator	Not in Current Plan	Not required to be raised if not substantially modified. It is located above the current 500-year flood plain, however; if installed as new today the Generator would need to be Raised by Approximately 1.2 Feet (Min. El. 53.85')
Blowers	Replace in Project P002	Elevate Blowers by Approximately 4.5 Feet (Min. El. 53.85')
Chemical Feed Equipment	Replace in Project P006	Elevate All Mechanical/Electrical Equipment Associated with New Chemical Equipment and Protect Chemical Tanks to El. 53.85'
Sludge Transfer Pumps	Not in Current Plan	If substantially modified would need to elevate Sludge Transfer Pumps by Approximately 7.5 Feet; this is not practical, and these were not damaged during Harvey. The cost to elevate these would exceed the cost to repair them if they were damaged in an event the exceeded Harvey levels.
Influent Lift Station Top of Wall	Replace Screw Pumps with Submersible Pumps in Project P007	Construct New Lift Station Wet Well with Flood Proof Hatches to Protect to El. 53.85'
Electrical Control Building FF	Replace MCC equipment in Project P001/P003	Elevate New Electrical Enclosures by Approximately 6.5 Feet (Min. El. 53.85')
Belt Press FF	Not in Current Plan	No Additional Requirements
Dewatering Sludge Pumps FF	Not in Current Plan	Elevate Pumps by Approximately 7.5 Feet; Optionally Do Not Raise and Forgo Sludge Dewatering in the Event of Pump Failure due to Flooding
NPW Pumps and Screen	Replace in Project 016	Replace Existing NPW Pumps with Submersible Pumps Installed in the Chlorine Contact Basin
Top of WWTP Basin Walls	Not in Current Plan	No Additional Requirements

As part of this Preliminary Engineering Report (PER), Kimley-Horn created a model to analyze the hydraulic impact of the proposed WWTP improvements. The model analysis shows that the proposed improvements will not cause an increase in water surface elevation at the WWTP site nor upstream in the 10-, 50-, 100-, and 500-year storm events.

3.4 SAFETY IMPROVEMENTS

Another reason for upgrading the WWTP is the need for improving the safety for operators and others working at the WWTP. This PER identified the following potentially hazardous situations:

1. Outdated Electrical Equipment: The Motor Control Center (MCC) and additional panels include equipment which is no longer manufactured, which makes repairs and maintenance difficult.
2. Panel Environment: Panel 'C' is located in a non-air-conditioned space which is not compatible with the equipment in the panel.
3. Fault Current Availability at Electrical Service: The outdoor electrical service receives power from three CenterPoint Energy (CNP) owned 500 kVA pole-mounted transformers. The fault current available from these transformers is a potential safety concern. The amps interrupting current (AIC) rating of Main Switchgear -1 (MSG-1) is listed as 65.0 kAIC, whereas the available fault is 85.9 kA. The AIC rating of equipment identifies the equipment's ability to operate without damage during a fault condition. Because the AIC rating of the equipment is less than the available fault current, there is potential that the equipment would be damaged in the event of a 3-phase bolted fault.
4. Pole Mounted Transformers: Electricity to the WWTP is provided by CNP from an overhead distribution system located on the Northeast corner of the property. This distribution system provides power to the WWTP via three CNP pole-mounted transformers, which have a 500kVA capacity. Current CNP practice is to install pad-mounted transfomers for this size service due to the risk in extreme storm events of winds interrupting the service.
5. Tripping Hazards: Several tripping hazards are located within the WWTP site. For example, there is a tripping hazard between belt filter press units where a floor drain grate has failed which leaves the floor drain open as a tripping hazard. Also, the mixed liquor often splashes on the walkways near the aeration basins which creates a slippery surface.

6. Fall Prevention: The belt filter press building includes an overhead rolling door on the second floor of the east face, which is typically kept open for ventilation. Two chains are draped across the opening which are not adequate for fall prevention.

3.5 OPERATION & MAINTENANCE COST SAVINGS

Another reason for upgrading the WWTP is the opportunity to decrease operation and maintenance costs. This PER identified the following potential cost savings:

1. Decreased Blower Power Demand Due to Fine Bubble System: One of the largest power demands at the WWTP is the blowers serving the aeration system. The proposed project includes changing the aeration system from the current coarse bubble diffusers to fine bubble diffusers. The fine bubble system will reduce the required capacity of the blowers. Specifically, the existing 100 horsepower blowers will be replaced by 80 horsepower blowers. Also, the operational schema will allow one blower to run the system as opposed to the current coarse bubble system which requires continuous operation of two of the three blowers. Overall, the fine bubble system will reduce power costs required for aeration.
2. Decreased Blower Power Demand Due to Dissolve Oxygen Control: The proposed project includes adding probes in the aeration basins to measure the dissolved oxygen (DO) levels within each basin. The signal from these probes will be sent to a controller on the blowers to reduce the blower power consumption based on a set point. The proposed blowers include a variable frequency drive which allows the blowers to pull less electrical power when the set point allows. Overall, this DO control system will reduce the power costs for aeration.

3.6 REGULATORY COMPLIANCE

Another reason for upgrading the WWTP is the opportunity to improve the ability to comply with current regulations and to increase the ability to comply with future regulations. The WWTP is regulated by the Texas Commission on Environmental Quality. This PER identified the following potential regulatory compliance measures:

1. Aeration and Clarifier Basins: per Texas Administrative Code (TAC) §217.153.C.3, “Each aeration basin and clarifier must have gates or valves to allow it to be hydraulically isolated.” Several of the slide gates are in poor condition and require repair or new gates.
2. Process Control: Per TAC §217.159.C, “A wastewater treatment facility with a design flow greater than 0.4 million gallons per day must provide for totalized flow measurement of the return sludge and waste sludge discharges for process control.” The existing facility does not have means to measure the return and waste sludge flow rates on a totalizer.
3. On-Site Lift Station: Per TAC §217.61.E.1, “A lift station or a transfer pumping station located at or discharging directly to a wastewater treatment facility must have a peak pump capacity equal to or less than the peak flow, unless equalization is provided.” The existing lift station capacity is less than the permitted peak flow (2.0 MGD).
4. Future Phosphorus Limits: TCEQ is in the process of updating TAC chapter 217. Some of the anticipated changes include a new design basis for organic loading projections. These organic loading calculation changes would provide a new design requirement for peak month BOD and NH3 loading. While the City of West University Place WWTP would be grandfathered from this regulation, once the WWTP makes any rehabilitation / improvements, the City may have to re-calculate basin size. If TCEQ adds a phosphorus limit, the City would need to add chemical systems to achieve the required removal.

SECTION 4 EQUIPMENT SELECTION

Kimley-Horn reviewed equipment recommendations obtained from multiple vendors, and compared options based on benefits to the WWTP design, capital cost estimate, and 20-year operation and maintenance costs. Kimley-Horn coordinated with City staff including Public Works and WWTP Operators to select equipment for the proposed upgrades. This section summarizes the selected equipment for each process.

4.1 PROPOSED EQUIPMENT SELECTION

In this PER section, Kimley-Horn updates and expands the equipment selections presented in the Master Plan. Table 6 lists each process unit and describes the equipment proposed in this PER.

Table 6: Equipment Selection

Equipment	Proposed Manufacturer
Influent Lift Station Pumps	Flygt
Headworks	Huber Step Screen
Grit System	Hydro International HeadCell
Fine Bubble	Aquarius Quantaer
Blowers	Atlas Copco Screw
RAS Pump	Flygt Concertor N100-6950
Scum Pump	Flygt Concertor
Non-Potable System	Grundfos Hydro MPC-E 3CRE
Gates	Fontaine
Dissolved Oxygen Probes	Hach Swivel Mount

4.1.1 INFLUENT LIFT STATION PUMPS

The selected equipment for the influent lift station pumps are Flygt NP 3171 MT 3~435 in a triplex lift station. The package should include a Flygt control panel and run with Variable Frequency Drives (VFDs). Appendix C includes the pump curves and technical data for the proposed pumps.



4.1.2 HEADWORKS

The selected equipment for the headworks screen is the Huber Step Screen model SSF-HF 3000x and WAP Wash Press. The package should include a Huber control panel. Appendix C includes technical data for the proposed screens.



4.1.3 GRIT SYSTEM

The selected equipment for the grit removal system is the Hydro International HeadCell with a 304 stainless steel enclosure. The package should include a Hydro International control panel including VFDs. Appendix C includes technical data for the proposed grit system.

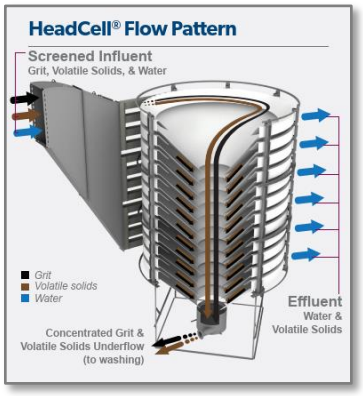



4.1.4 FINE BUBBLE DIFFUSERS

The selected equipment for the fine bubble diffuser system is the Aquarius Technologies, LLC Quantaer system. Appendix C includes technical data for the proposed fine bubble diffusers.





4.1.5 BLOWERS

The selected equipment for the blower system is the Atlas Copco Screw Blowers model ZS4VSD. The package should include an Atlas Copco control panel including VFDs. Appendix C includes technical data for the proposed blowers.

The blowers are shipped with an enclosure that reduces noise, protecting operators and reducing nuisance to neighbors.



4.1.6 RAS PUMP AND SCUM PUMPS

The selected equipment for the RAS and scum pumps are Flygt Concertor N100-6950. The package should include a Flygt control panel and run with Variable Frequency Drives (VFDs). Appendix C includes the pump curves and technical data for the proposed pumps.

The Concertor can direct flow back through the bar screens to remove scum. The system will require constructing pump bays within the basin for submersible configuration.



4.1.7 NON-POTABLE SYSTEM

The selected equipment for the non-potable circulation system is the Grundfos Hydro MPC-E 3CRE. The package should include a Grundfos control panel including VFDs for the four stage pump. Appendix C includes technical data for the proposed pumps.



4.1.8 GATES

The selected equipment for the gates replacement is the Fontaine Sluice Gates. The model will be series 20 model 204-PX. The slide assembly and frame assembly are constructed of 316L stainless steel. Appendix C includes technical data for the proposed gates.

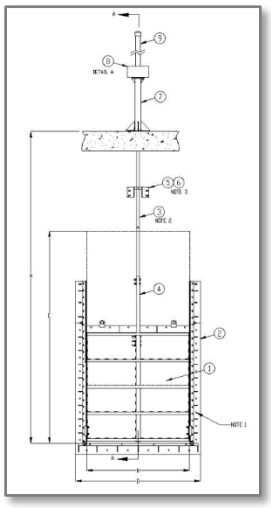

4.1.9 DISSOLVED OXYGEN PROBES



The selected equipment for the dissolved oxygen (DO) probes is the Hach LDO sc Model 2 with Luminescent Technology. Each probe will be attached to the handrail on a swivel mount to allow ease of maintenance. The system will include a sc4500 controller to monitor signals from all 8 probes and provide feedback to the blowers for the appropriate set point. Appendix C includes technical data for the proposed DO probes.

SECTION 5 MASTER PLAN FINDINGS

Kimley-Horn completed a Master Plan for the WWTP in November 2020. The Master Plan includes an evaluation of the existing equipment, documentation of the existing process, alternatives for future operational scenarios, and a capital improvement plan for the WWTP.

In this PER document, Kimley-Horn updates the equipment evaluation presented in the Master Plan. As a basis for the WWTP Master Plan and Capital Improvement Plan, the 2020 Master Plan documented the existing WWTP process. Figure 6 shows a diagram of the existing site layout indicating the location of each major treatment unit.

Figure 6: Site Layout

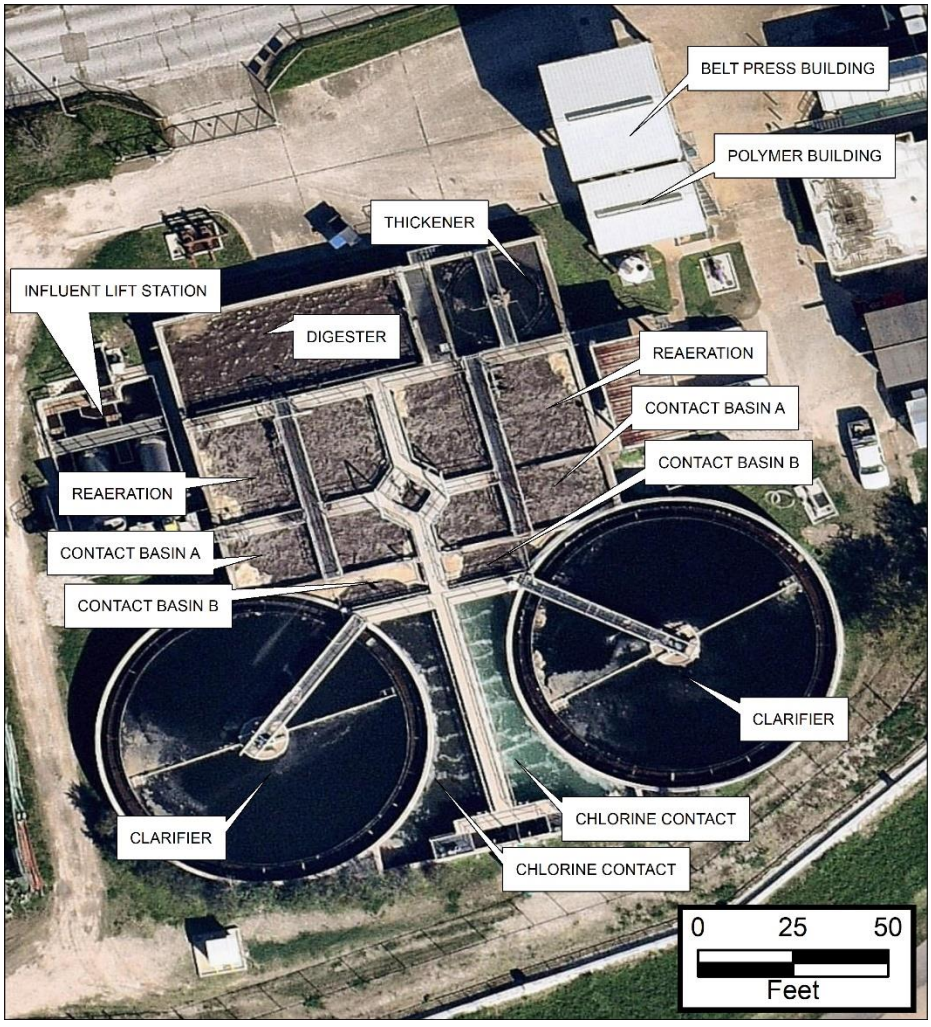

The current operational schema, the WWTP runs in contact stabilization process with coarse diffusers. There are two treatment trains, each consisting of two aeration basin trains that are operated in series. In each train, the first basin is the reaeration basin that receives the return activated sludge (RAS) from the clarifier and reaerates the activated sludge before mixing with the influent sanitary sewage. The second basin is the contact basin, where the activated sludge consumes the biomatter in the influent. The biodegradable carbon in influent wastewater stream is measured as biochemical oxygen demand (BOD), which is limited in the effluent discharge.

After the contact basin, the mixed liquor enters the clarifier where the sludge is settled out and returned to the reaeration basin as RAS. Simultaneously, clarified water spills over the top of a weir. The clarified stream continues to disinfection, dechlorination, metering, and finally discharge at the permitted outfall.

The solids handling process takes the activated sludge from the reaeration basins as Waste Activated Sludge (WAS) to the aerobic digester to further break down the microorganisms and thicken the WAS. The thickened sludge is pumped to the solids handling building where a belt press removes most of the liquid portion and dry sludge cake is received in roll off containers.

Figure 7 shows a detailed flow chart of the existing plant process, called a process flow diagram (PFD). The PFD indicates average and maximum flows through the treatment process. It also indicates the locations of the aeration system including the air lift pumps. Appendix D includes a larger version of the existing process flow diagram.

Figure 7: Existing Process Flow Diagram

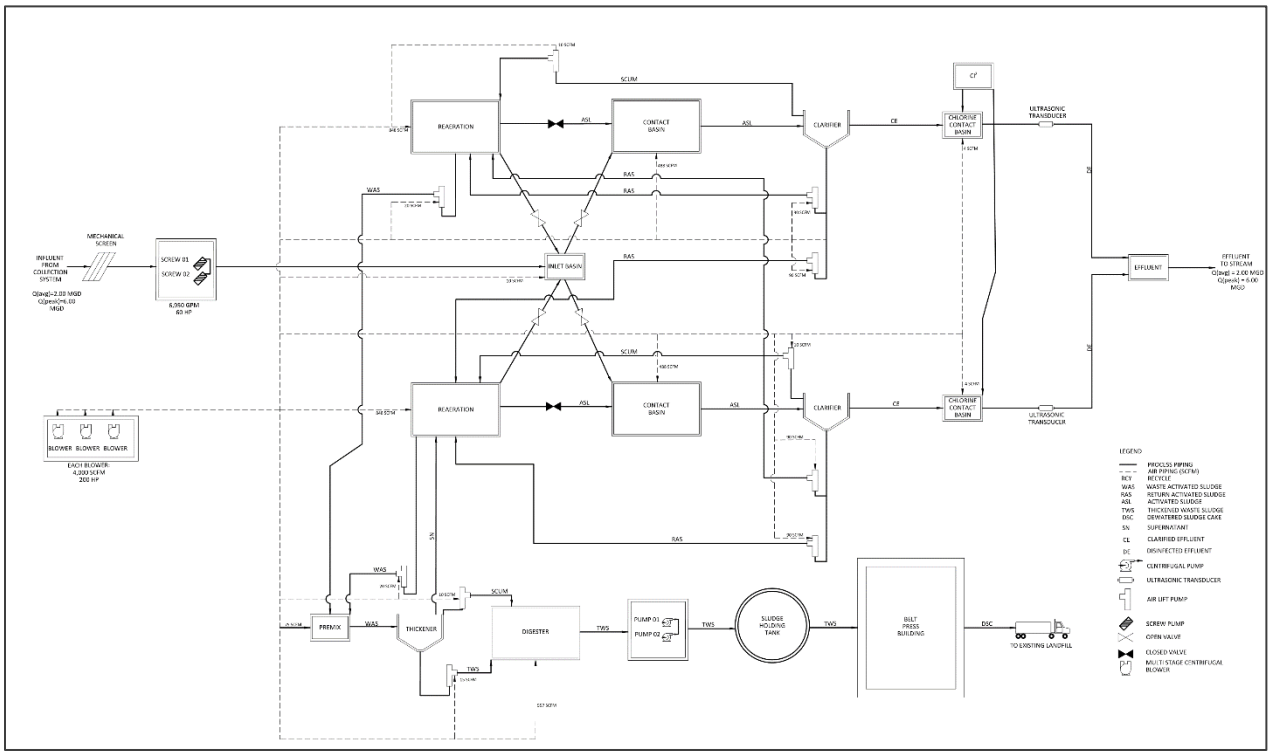

This study confirmed the basin geometry based on dimensions from record drawings and the results of the hydraulic survey. Calculations show that the current WWTP is sized adequately to meet effluent limits and TCEQ design standards. The minimum treatment unit sizes were based on the current permit limits. Table 7 summarizes the minimum sizes of the basins and the current key dimensions of major treatment units.

Table 7: Existing Basin Geometry Calculations

Unit		Total Required		Total Provided	
Contact Basin	Volume	33,494	ft^3	35,376	ft^3
	Airflow	5,494	scfm	6,200	scfm
Clarifier	Weir Length	300	ft	471	ft
	Surface Area	5,347	ft^2	8,836	ft^2
	Volume	60,152	ft^3	99,402	ft^3
Reaeration Basin	Volume	54,809	ft^3	57,420	ft^3
Aerobic Digester	Volume	28,071	ft^3	31,388	ft^3
Chlorine Contact	Volume	11,139	ft^3	27,216	ft^3

5.2 EXISTING WWTP PROCESS DOCUMENTATION

The Master Plan documented the existing treatment units of the WWTP and the condition of the unit. Appendix E includes a site layout exhibit of the WWTP with the volume and dimensions of the treatment units.

The following equipment catalog describes each major process equipment and describes the manufacturer, model, size, and relevant operational parameters. The equipment catalog includes a qualitative condition assessment and notes any issues with condition.

5.2.1 BAR SCREEN

Coarse Bar Screen	
Count:	1
Opening of Bar:	1 inch
Bar Thickness:	¼ inch
Height of Screen:	6 feet - 6 inches
Degree of Incline:	60°

Condition: Good, No visible issues.



5.2.2 LIFT STATION

Screw Pump	
Count:	2
Manufacturer:	Evoqua
Model:	Internalift Pump
Degree of Incline:	45°
Capacity:	6,950 gpm

Condition: Good, Rusting around pump components.



Motor	
Count:	2
Motor HP:	60 HP
Volts:	230/460
Amps	136/68

Condition: Good: No visible issues, inspection recommended due to corrosive environment.



5.2.3 SLUICE GATES

Sluice Gate	
Count:	8
Manufacturer:	Waterman Valve
Gate Style:	Rectangular Butterfly
Opening:	48 inches x 48 inches
Actuator:	Manual

Sluice Gate	
Count:	2
Manufacturer:	Waterman Valve
Gate Style:	Rectangular Butterfly
Opening:	24 inches x 24 inches
Actuator:	Manual

Condition: Poor: Several gates are stuck open and show signs of corrosion.



5.2.4 CONTACT BASINS

Contact Basin A	
Count:	2
Dimensions (LxWxH):	43.5 ft x 15 ft x 24 ft
Side Water Depth:	22 ft
Volume:	28,710 ft^3
Diffuser Type:	Coarse
Diffuser Submergence:	16 ft

Contact Basin B	
Count:	2
Dimensions (LxWxH):	21.8 ft x 10 ft x 16 ft
Side Water Depth:	15 ft
Volume:	6,540 ft^3
Diffuser Type:	Coarse
Diffuser Submergence:	14 ft

Condition: Fair: Cracks in concrete structure need to be evaluated. Catwalks are in poor shape, brackets and bolts loose.



5.2.5 REAERATION BASIN

Reaeration Basin	
Count:	2
Dimensions (LxWxH):	30.0 ft x 43.5 ft x 24 ft
Side Water Depth:	22 ft
Volume:	57,420 ft^3
Diffuser Type:	Coarse
Diffuser Submergence:	16 ft

Condition: Fair: Cracks in concrete structure need to be evaluated.



5.2.6 COARSE DIFFUSERS

Coarse Diffuser	
Size of Drop:	1 inch
Isolation Valve Size:	½ inch

Coarse Diffuser w/ Shear Tube	
Size of Drop:	1 to 2 inches
Isolation Valve Size:	¾ to 1 inch

Condition: Poor. Operator reports corrosion issues during routine maintenance. Multiple air drops have cracks and are missing diffusers. Vibration is causing air drop supports to break off. Orifice at valves are missing on most diffusers.

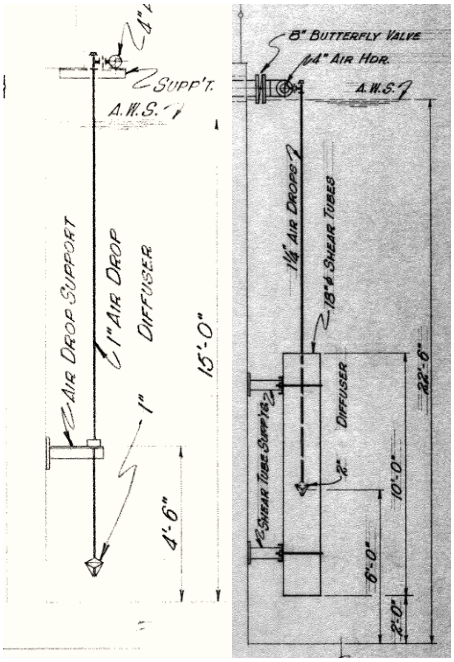

5.2.7 BLOWER

Blowers	
Count:	3
Air Flow:	4,100 scfm
Manufacturer:	HSI
Model Number:	12607
Motor HP:	200 HP
Volts:	460
Amps	219.3
Phase:	3

Condition: Fair: Units have been recently recoated; however, units require regular maintenance. Blowers are approximately 8 years old and require major bearing work every year.



5.2.8 CLARIFIER

Clarifier	
Count:	2
Manufacturer:	Evoqua
Dimensions (Dia x H)	75 ft x 15.8 ft
Side Water Depth:	13.8 ft
Volume:	121,933 ft^3
Surface Area:	8,835 ft^2
Drive HP:	1 HP
Volts:	208-230/460
Amps	3.3-3/1.5



Phase:	3
Power Factor	70%

Condition: Poor: Clarifier components require replacement within the next 5 years. Concrete on perimeter is cracking and chipping away. Skimmer arm on bottom not circulating sludge properly, causing floating sludge. Scum trough requiring constant addition of water to prevent clogging.

5.2.9 CHLORINE CONTACT BASIN

Chlorine Contact Basin	
Count:	2
Dimensions (LxWxH):	64.8 ft x 15 ft x 16 ft
Side Water Depth:	11.25 ft
Volume:	27,216 ft^3
Diffuser Type:	Coarse
Diffuser Submergence:	10 ft

Condition: Good: Concrete on perimeter is cracking and chipping away.



5.2.10 CHLORINE FEED SYSTEM

Chlorine Feed System	
Count:	2
Feed State:	Gas
Vacuum Regulator:	Siemens
Chlorinator:	Flow Paced

Condition: Good: Some wear from being outside. Chlorine warning signs should be replaced. Proximity to adjacent properties raises concerns about on-site storage of chlorine gas as a higher safety concern than other disinfection methods.



5.3 SOLIDS HANDLING SYSTEM

5.3.1 DIGESTER

Digester	
Count:	1
Dimensions (LxWxH):	55.8 ft x 25 ft x 24 ft
Side Water Depth:	22.5 ft
Volume:	31,388 ft^3
Diffuser Type:	Coarse
Diffuser Submergence:	16 ft

Condition: Poor: Concrete on perimeter is cracking and chipping away. Several diffusers are broken and need to be replaced. Grit is collecting in the digester and causing issues with basin circulation.



5.3.2 GRAVITY THICKENER

Gravity Thickener:	
Count:	1
Dimensions (Dia x H)	25 ft x 16 ft
Side Water Depth:	14.5 ft
Volume:	7,118 ft^3
Surface Area:	491 ft^2
Drive HP:	1 HP
Volts:	230/460
Amps	4/2
Phase:	3

Condition: Poor: Corrosion on weirs and metal components above water. Skimmer arm is corroded and needs permanent repair.



5.3.3 SLUDGE TRANSFER PUMPS

Sludge Transfer Pumps:	
Count:	2
Manufacturer:	Gorman-Rupp
Model:	6 A3-B
Impeller Diameter:	11 ¼”

Info taken from O&M manual (pump plates were painted over and unreadable.)

Condition: Good: Pumps have been recently recoated.



5.3.4 SLUDGE HOLDING TANK

Sludge Holding Tank	
Count:	1
Capacity:	800 gals

Condition: Good: Minor wear apparent.



5.3.5 POLYMER SYSTEM

Polymer Feed System	
Count:	1
Manufacturer:	Siemens
Model Number:	M601-D2 5AAC

Condition: Good: Minor wear apparent.



5.3.6 BELT PRESS

Belt Press	
Count:	2
Manufacturer:	Alva Laval

Condition: Good: Belt Presses are designed to run through each other. Electrical modifications should be made to isolate each belt for redundancy and individual operation.



5.3.7 DECHLORINATION FEED SYSTEM

Dechlorination Feed System	
Count:	1
Manufacturer:	Stenner
Max Feed Rate:	40 gpd
Max Feed Pressure:	100 psi
Model Number:	S3007

Condition: Good. System was recently replaced by City.



5.4 NON-POTABLE SYSTEM

5.4.1 NON-POTABLE FEED PUMP

NPW Feed Pump	
Count:	1
Manufacturer:	Gorman-Rupp
Model Number:	4250-95
Motor Size:	10 HP
Volts:	208-230/460
Amps	30.0/15.1
Phase:	3

Condition: Good: No visible signs of damage. NPW system as whole should be redesigned to optimize.



5.4.2 NON-POTABLE WATER FILTER

Water Filter	
Count:	1
Manufacturer:	Orival Water Filters
Model Number:	OR-06-PE

Condition: Good: Minor corrosion on above ground piping.



5.4.3 NON-POTABLE PUMPS

Non-Potable Pumps	
Count:	2
Manufacturer:	Barmesa Pumps
Model:	BMV12-50-753/70120050B
Flow Rate:	53 gpm
Pressure Rating:	114 psi
Motor Size:	10 HP
Volts:	25/13
Efficiency:	87%

Condition: Good: Pumps appear to be in good condition minor corrosion visible.



5.4.4 HYDROPNEUMATIC TANK

Hydropneumatic Tank	
Count:	1
Manufacturer:	Wendland Mfg. Corp.
Serial Number:	39284
Pressure Rating:	125 psi
Air Compressor:	Ingersoll Rand

Condition: Good: no noticeable damage to tank.



5.5 ELECTRICAL SYSTEM

5.5.1 GENERATOR

Generator	
Count:	1
Manufacturer:	Kohler
Model Number:	750PROZMB
Fuel:	Diesel
Kilowatt:	750.00
Phase:	3
KVA:	938.00
Power Factor:	0.8
Voltage:	277/480
Amps:	1,128.00

Condition: Good: Generator at the beginning of its life cycle.



5.5.2 POWER SYSTEM CONDITION ASSESSMENT

The electrical components of the plant were evaluated by Kalluri Group, Inc. The Wastewater Treatment Plant is supplied power at 480/277 volts, three phase by CenterPoint Energy (CNP).

The CNP service is considered reliable and overhead CNP distribution lines in the area appear to be in good condition. The plant's original electrical utility service, rated 1400 Amps, was built in the 1980 2MGD project. Only one major change has been made to the plant's electric utility service. In the 2011 Generator Project the Utility Service was replaced, with larger capacity equipment.

Three 500 kVA CNP owned pole mounted transformers serve the entire plant. The transformers are capable of supplying 1805 amps continuous and developing 85,900 amps of short circuit current. The CNP transformers are connected overhead to a 1600 amp bus weatherhead, installed with the generator project, which increased the plant's power capacity 200 amps from the original service. The CNP billing meter has a communications and processor enclosure installed next to it. The purpose of the enclosure next to the billing meter is not known but it appears to be monitoring power. The plant's main circuit breaker is a Square D PowerPact Series circuit breaker identified in the drawings as Main Switchgear-1 (MSG-1). The main circuit breaker is rated for 1600 amps with a short circuit interrupting rating of 65,000 amps. The Main Breaker enclosure contains the main breaker and a surge protection device (SPD). During the site visit it was observed the main service surge protection unit has failed. The Generator Project also installed a 750 kW generator and a 1600 amp rated Automatic Transfer Switch (ATS). The short circuit interrupting rating of the ATS could not be identified during the site visit. The Power Distribution Panel (PDP), also installed with the generator, is rated for 1600 amps with a short circuit interrupting rating of 65,000 amps. The current Main Breaker, Generator, ATS and PDP all appear to be well maintained and in very good condition. The existing electrical service equipment, ATS and generator are still in the beginning of service life, at 8 years old, however they are a topic of recommendations later in this memo. The equipment ratings are also discussed later in the memo when calculating additional power capacity available.

Two of the feeder breakers in PDP feed control building equipment installed in the original 1980 project. These Feeders are identified as Feeder A and Feeder B in the generator project drawings. The third feeder breaker supplies power to the generator enclosure loads (battery charger, heaters, lights, etc.). Feeder A supplies power to Lift Pump No. 2 and Transformer T1. Feeder A was the original generator circuit feeding the control building and one lift pump to keep the plant in service in the event of utility power outage. Feeder B supplies power to the MCC. The MCC is a Gould/ITE brand 5600 Series unit with 1200 Amp bus installed in the 1980 project and it feeds the balance of plant. The MCC, Transformers T1, T2, and the rest of the equipment

located in the control building appear to be in good condition, for the age of the equipment. The Gould/ITE brand is obsolete and is no longer in production. The original construction documentation, for the ITE 5600 series MCC, now belongs to Curtis-Wright and retro-fit parts are still available. Feeders A and B are routed underground in duct bank. Duct bank is the method of power distribution to the process structures, other buildings and plant loads. The underground conduit and conductors are encased in red concrete, according to Record Drawings. The duct bank condition is not known. Record Drawings do not indicate if steel reinforcing bars were installed in the duct bank, concrete encasement, during the 1980 installation.

Underground duct banks, routed to the process structure, rise adjacent to the structure and conduits are routed on top of the structure walls around to various equipment. One major issue observed onsite is rusted conduit. In 1980 plant construction, rigid galvanized steel conduit was the standard, and it was used throughout the plant. The conduit fittings, anchors, strut and straps installed in 1980 are all ferrous metal, without protective PVC coating. Rusting conduit, fittings, anchors, strut supports, and straps are found all around the structure. This is a common problem for plants built in this time frame since it allows conduit to corrode away and expose conductors to damage, allows conduits to drop from the installed level and equipment supports to fail. The corrosion is most pronounced on the process structure, however around the screw pumps and in chemical areas rust is eroding ferrous metals away. Panel C in the Chlorinator Building and Panels D and F, at the lift station, are in poor condition.

5.5.3 POWER SYSTEM CAPACITY ASSESSMENT

The Wastewater Treatment Plant CNP service is capable of supplying the full capacity of the installed 1600 amp bus weatherhead, however the generator does not have the capacity to supply power to the entire plant without load shedding. The generator project installed inhibit relays, designed to keep specific loads from starting when the generator is in service. These will need to be incorporated into any proposed improvement designs as well. The Main Switchgear-1 (MSG-1), rated for 1600 Amps can support the full capability of the utility connection. The 1600 Amp rated Automatic Transfer Switch (ATS) and Main Power Distribution Panel (PDP) with bus rated 1600 Amp are capable of supporting the full capacity potential of the utility service. The current Utility Service, Main Breaker, ATS and PDP all appear to be capable of serving additional load. The existing MCC, and it's 1200 Amp Bus are the current load increase limitation.

The Load Analysis, created in the 2011 Belt Press project, appears to be accurate and relative to the current equipment installed onsite, with exception of the conveyor system addition. The conveyor system added approximately 11 HP to the MCC.

The Total Connected Load to utility, utilizing the 2011 Load Analysis, and adding the conveyors is calculated at 1325 amps, with an additional ampacity of approximately 275 amps utilizing the existing equipment's nameplate ratings. The conservative additional Capacity of the MCC is calculated to be approximately 155 amps.

5.5.4 SCADA SYSTEM ASSESSMENT

The plant currently utilizes a single SCADAPack brand, 5000 Series, Programable Logic Controller (PLC), located in the control building, in the cabinet. The PLC cabinet is labeled MTU, which indicates the cabinet is from a time when PLCs did not exist and "Terminal Units" with digital controllers were utilized. The PLC collects data from connected instrumentation and equipment. Monitoring is the primary function of the PLC. It does not appear as though many changes have been made to control system wiring. The PLC processor installed is a 5203, it operates at 16 bits and is obsolete, in the SCADAPack product line. It is several generations old and the current unit is known to have a communication issue, with regard to connecting to the existing workstation. The existing PLC also has very limited Input and Output expansion capacity. Although the cabinet is in fairly good condition it contains nonfunctional components and has no expansion space. The control building network switches are adjacent to the plant PLC. The rack and network cabling look new.

Instrumentation is limited onsite. Level switches were being added to the wet well for the lift pumps during the site visit, however the installation was not complete. Dissolved Oxygen (DO) sensors and transmitters have been added to plant process basins and are connected to the SCADAPack. The DO data is not being used for blower or wasting control by the PLC, however the data is an aide for monitoring and verifying that timed operations are proper. An auto-dialer is in service for notification to personnel of alarm levels.

In 2011 the Belt Filter Press (BFP) replacement project installed two control panels, each equipped with an Allen-Bradley (A-B) brand Micrologix 1400 Series PLC. In 2016 the Belt Press Conveyor project installed a new "Belt Filter Press Main Control Panel" with a third A-B Micrologix 1400 PLC in it. These PLCs are not network connected to the SCADAPack PLC. The three BFP

control panel enclosures are in good condition with no sign of internal modification or damage. The A-B Micrologix 1400 PLC is a top shelf unit and is considered current technology. Based on Record Drawing review and observations these are the only PLCs installed onsite. The SCADAPack does have a Desktop Workstation (PC) computer connected to it. The PC is relatively new and is running VT Scada Software, to interpret and graphically illustrate the input and output data collected from the SCADAPack, as well as offsite Lift Station data. The Lift Station aspect of the SCADA system is not in the scope of this document. The PC is receiving lift station data through an ethernet switch, on Cat 6 twisted pair cable. The ethernet switch appears to serve the phones and PCs installed in the control building. The ethernet switch is served by fiber optic cable. The internet service provider is not known, and off-site communications is not in this documents scope.

To summarize the SCADA system condition, the SCADAPack PLC has reached the end of design life. The three A-B Micrologix 1400 Series PLCs installed, in the belt press building, are considered to be current technology and the high end of the A-B PLC line. Instrumentation installed is acceptable for monitoring only. The Plant is Operated in Manual Mode, operators use hand controls for most functions, with limited timer control for some equipment's specific cycles.

5.6 RECOMMENDED PROCESS OPERATION

This study compares the biological treatment process design options for the WWTP.

The current treatment process design is a contact stabilization (CSTAB) process. Figure 8 shows a diagram of the CSTAB process. In CSTAB, two separate basins are used for the biological treatment: one basin is stabilization, the other is contact. The original 1980 record drawings label the stabilization basin as "reaeration". The contact zone has a relatively short contact time with a lower mixed liquor suspended solids (MLSS) concentration, often between 6,000 and 10,000 mg/L of MLSS. The contact zone rapidly removes soluble BOD. The next basin, the stabilization zone, has a longer detention time and much higher MLSS concentration. In the stabilization zone, RAS is aerated. The benefits for the CSTAB process include: 1) rapid BOD removal and 2) smaller aeration basin volume.

Figure 8: Contact Stabilization Process

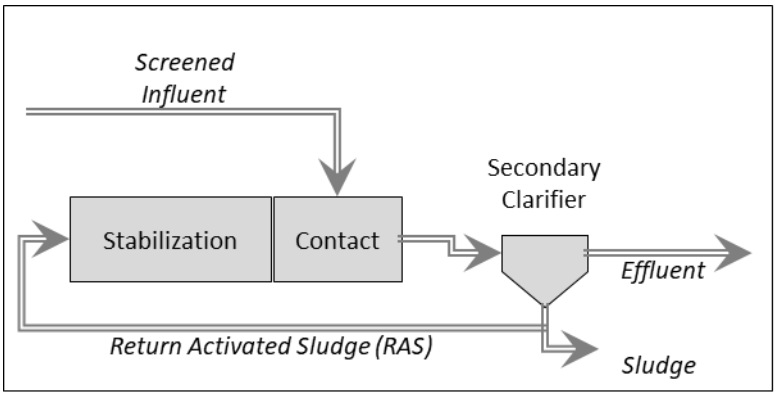

This study compares two alternate biological treatment process designs:

- Process Scenario 1: Existing Contact Stabilization (CSTAB) Process
- Process Scenario 2: Proposed Complete Mix Activated Sludge (CMAS) Process

The proposed biological treatment process would convert the existing basins to complete mixed activated sludge (CMAS) by changing gates and moving the RAS feed locations. Figure 9 shows the CMAS process diagram. In CMAS, screened influent and RAS are both introduced into the same aeration basin. Due to the aeration mixing, the organic load, MLSS concentration, and oxygen demand are uniform throughout the basin. The benefit of CMAS is stability of process due to dilution of shock loads that may occur and straightforward operation.

Figure 9: Complete Mix Activated Sludge Process

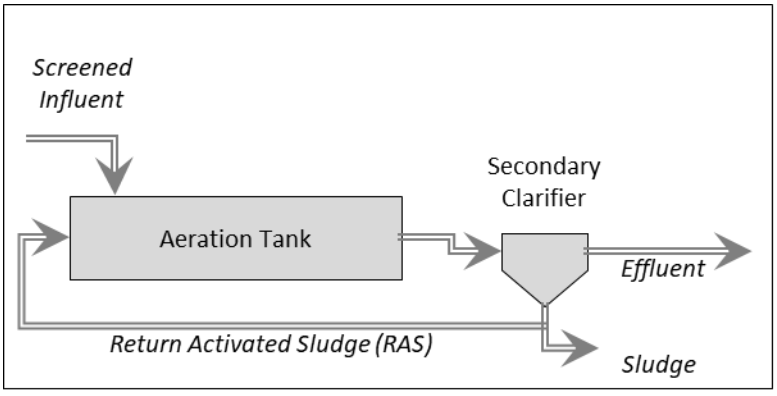

This study recommends conversion of the WWTP process from CSTAB to CMAS. This change will require modification of gates between the existing basins. This process change will not require construction of

additional basins. Due to the different process dynamics, a discharge permit modification is required that may include re-rating the WWTP capacity. The flow analysis in section 4 shows that there is adequate capacity in the WWTP for re-rating the WWTP to a lower discharge flowrate.

One advantage of process conversion would be ability to improve ammonia nitrification. The CSTAB process operates with a higher concentration of sludge than the CMAS process, thereby allowing for a shorter contact time between the activated sludge and the raw sewage entering the WWTP. This shorter contact causes issues for plants that need to convert ammonia to nitrate, a process referred to as nitrification. The TPDES permit still requires sampling of outgoing concentrations of ammonia. Ammonia could become a concern if the plant effluent has a spike since the current permit requires measurements to be taken and reported to TCEQ.

Currently the WWTP discharge has no permit restrictions for phosphorous, ammonia, or nitrate. A 60 MGD WWTP is located upstream of the West University WWTP. The upstream WWTP does not have a permit limitation for phosphorus or nitrate; the WWTP has a 3 mg/l limit on ammonia measured as nitrogen. Because of this, phosphorus will most likely not be required at the West University WWTP in the near future. If ammonia limits were required in the permit, the current contact stabilization would be unable to reliably achieve a concentration below 3 mg/L. A conventional activated sludge treatment process handles ammonia treatment with higher efficiency. If a phosphorus limit was permitted, an alum feed system between the contact basin and the clarifier would be the most cost-effective way to treat the wastewater. This setup would be able to meet an effluent limit of 1 mg/L.

The current CSTAB process aerates the contact basin and reaeration basin with coarse diffusers. While the plant no longer has an ammonia limit, it is still required to report the concentration. If the concentration increases, it could result in the limit returning in subsequent permit renewals. This process change to CMAS would prepare the plant for this potential requirement.

To change the plant would require opening different gates between the aeration basins. Figure 10 shows the flow pattern of the WWTP as it currently operates as a contact stabilization plant.

Figure 10: Existing Flow Pattern Schematic

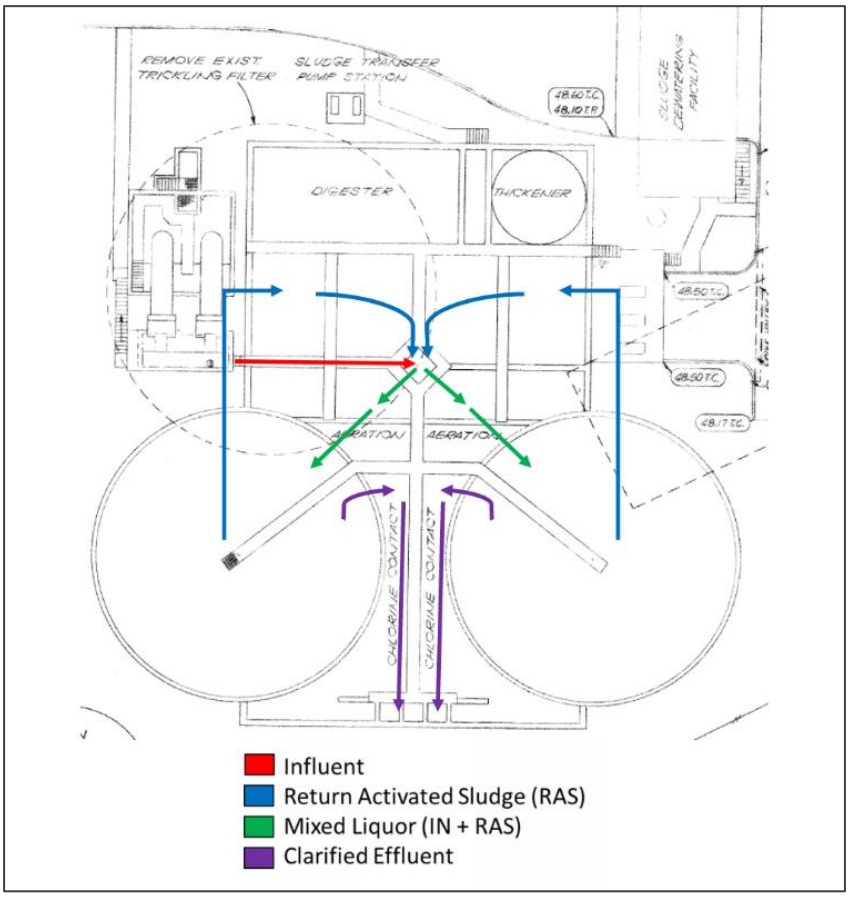

To change to CMAS process, the gates would operate as shown in Figure 11.

Figure 11: Proposed Flow Pattern Schematic

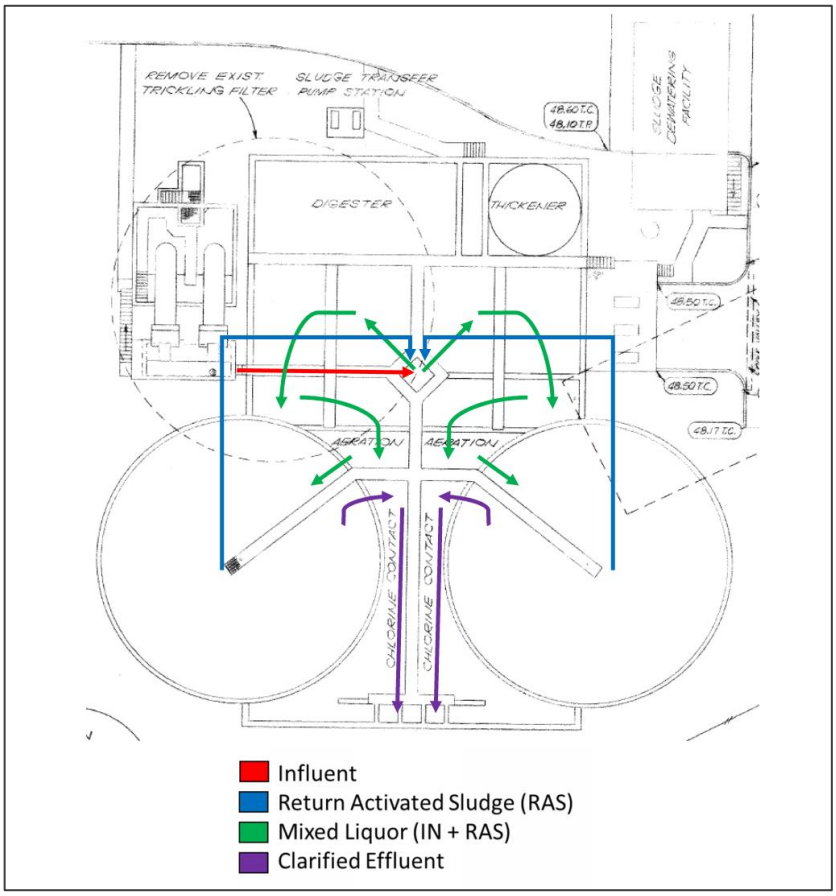

The proposed treatment process will alter the flow of the WWTP by converting the reaeration and contact basin into aeration basins, which have activated sludge and influent combined at the head of the plant. Figure 12 shows the adjusted process flow diagram of the WWTP, an enlarged copy is also provided in Appendix E.

Figure 12: Proposed Process Flow Diagram

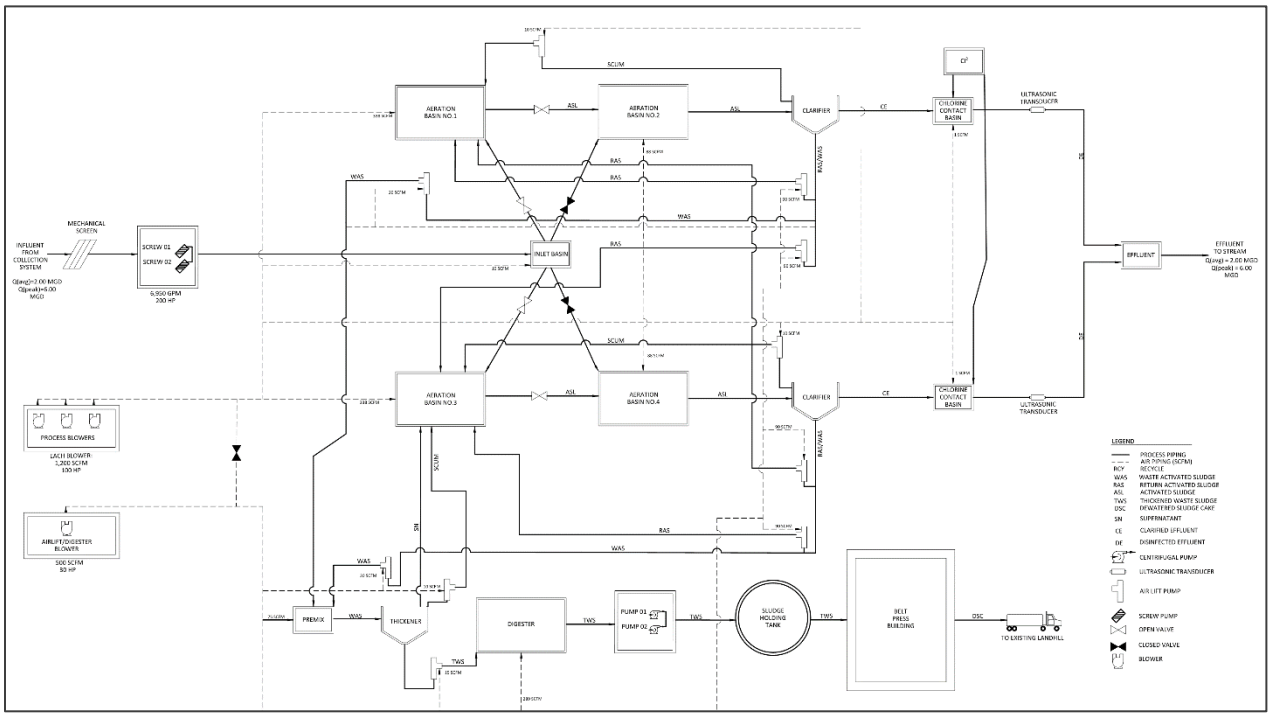

SECTION 6 ANALYSIS SINCE THE MASTER PLAN

This section describes changes in the design based on new information since the publication of the Master Plan. Since the master plan, our team has completed the following tasks:

- Survey
- Geotechnical study
- Hydraulic Analysis and Floodplain Permitting
- Structural Preliminary Design
- Architectural Preliminary Design
- Electrical Preliminary Design

This section describes the Survey, Geotechnical study, and Hydraulic Analysis. The Structural, Architectural, and Electrical preliminary designs are presented in their own sections of this PER.

6.1 SURVEY

Our surveyor, Windrose Land Services, Inc. prepared a land title and topographic survey of the 2.455 acre parcel that includes the WWTP. The parcel is situated in the Pleasant W. Rose League Abstract Number 645 in Harris County, Texas. Appendix F includes the survey exhibit.

The survey identified an issue with the eastern property boundary. A previous survey indicates a property line located on the eastern fence line. Figure 13 shows this property line noted “boundary line shown per survey by Paul P. Kwan RPLS #4313 on 3/16/2015”. Windrose researched Harris County records but could not identify documents which support the Kwan boundary. Figure 13 shows the property line labeled L1 per the county deeds records. The proximity of the boundary as identified in the Windrose survey to the existing control building cases a constructability issue due to the lack of space for construction within the City’s parcel.

Figure 13: Portion of Windrose Survey Exhibit

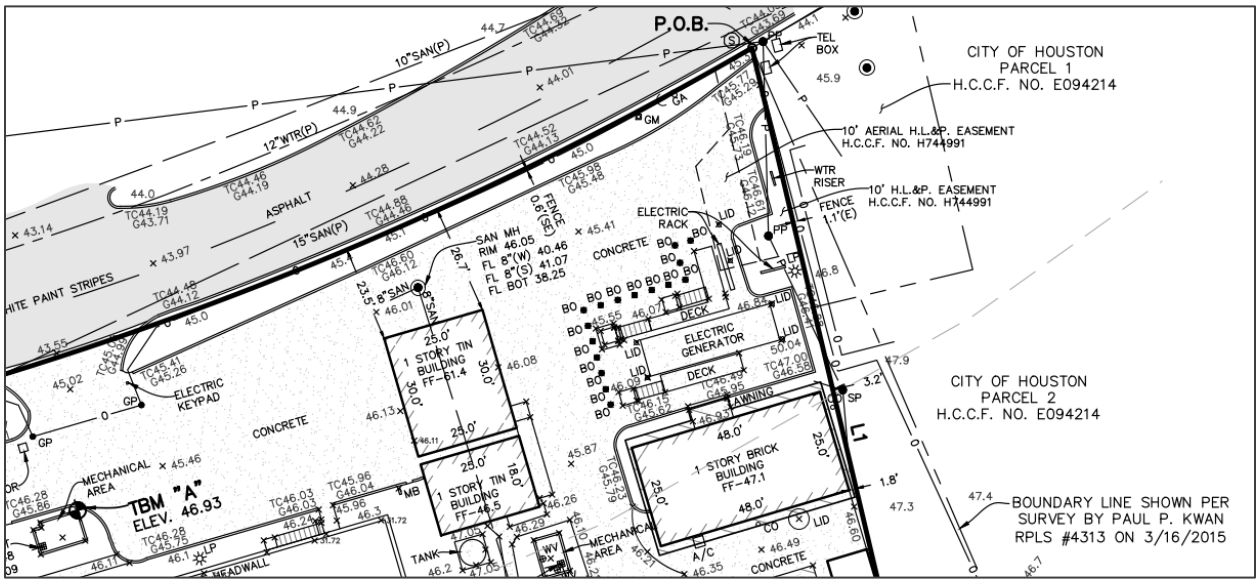

The eastern property line is approximately 3.2-feet from the northeast corner of the existing control building, and approximately 1.8-feet from the southeast corner. This narrow area is insufficient for construction of piers to support a structure above the existing control building. Also, the City of Houston building setback from a side property is regulated by Houston City Ordinances Chapter 42 Division 3.

6.2 GEOTECHNICAL STUDY

Our geotechnical subconsultant, Gorrondona Engineering Services, Inc. (GES) evaluated the general soil conditions at the proposed site and developed geotechnical engineering design recommendations for the proposed project. Appendix G includes the geotechnical report. These recommendations from this study form the basis of the structural analysis. Table 8 shows a summary of the bore results and Figure 14 shows the locations of the six geotechnical bores.

Table 8: Geotechnical Bore Summary

Bore	Depth (feet below ground surface)	Generalized Subsurface Conditions	Groundwater Initially Encountered (feet below ground surface)
B-01	25	Pavement to 7.3-inch Sandy Lean Clay to 4 Feet Fat Clay with Sand to 15 Feet Silty Sand to 35-feet	Not encountered
B-02	25	Sandy Fat/Lean Clay to 6 Feet	Not encountered

Bore	Depth (feet below ground surface)	Generalized Subsurface Conditions	Groundwater Initially Encountered (feet below ground surface)
		Fat Clay with San to 15 Feet Sandy Lean Clay to 20 Feet Clayey Sand to 25 Feet Silty Sand to 35 Feet	
B-03	25	Sandy Fat Clay Fill to 4 Feet Silty Sand Fill to 6 Feet Fat Clay with Sand to 10 Feet Clayey Sand to 15 Feet Silty Sand to 35 Feet	31 Feet
B-04	25	Pavement to 3-inch Sandy Fat Clay to 8 Feet Auger refusal at 8 Feet	Not encountered
B-05	25	Pavement to 3-inch Clayey Sand Fill to 8-feet Fat Clay to 15-feet Sand to 25-feet	Not encountered
B-06	25	Pavement to 5.5-inch Fill to 6-feet Sandy Lean Clay to 25 Feet	Not encountered

The geotechnical report makes recommendations for the design of construction excavation, earthwork including site preparation and fill, demolition, loading on buried structures, retaining structures, buried pipes, erosion protection, and detention ponds.

The geotechnical bores encountered buried structures, possibly from the original WWTP, at B-04 location. The report includes suggestions for exploration and removal or work around these structures.

Figure 14: Geotechnical Bore Locations

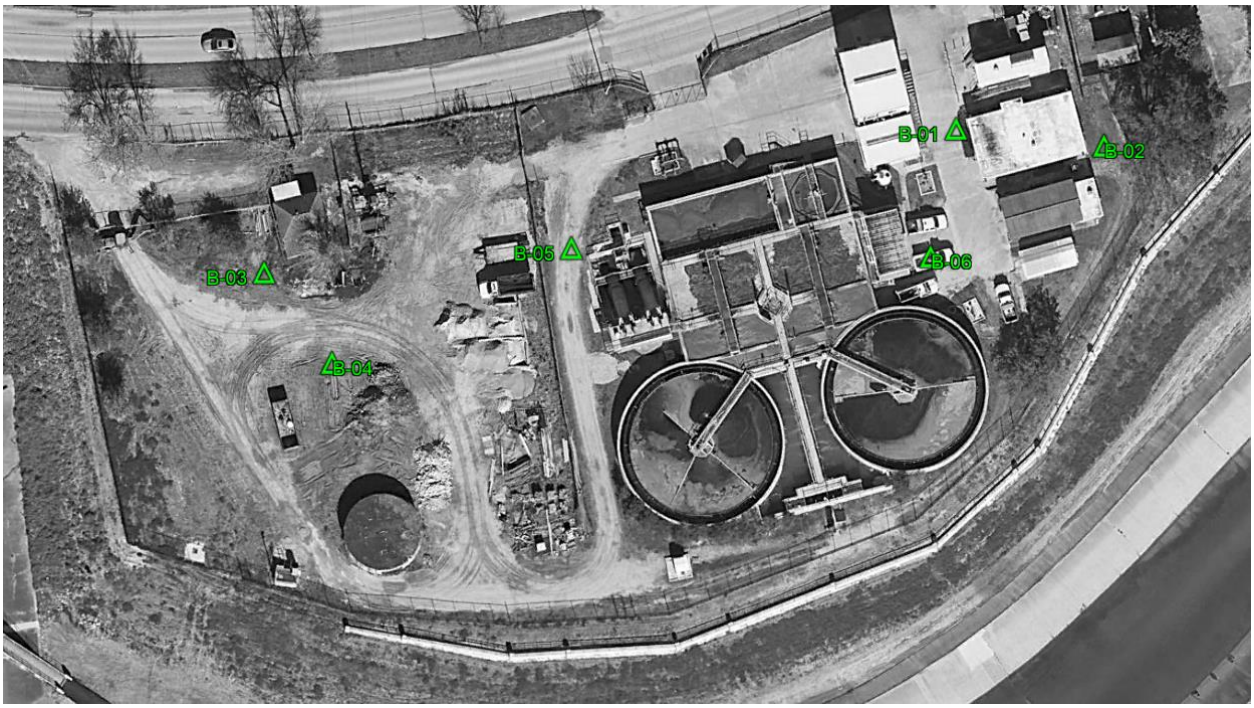

6.3 HYDRAULIC ANALYSIS AND FLOODPLAIN PERMITTING

As part of this Preliminary Engineering Report (PER), Kimley-Horn created a model to analyze the hydraulic impact of the proposed WWTP improvements. The model shows that the proposed improvements will not cause an increase in water surface elevation at the WWTP site nor upstream in the 10-, 50-, 100-, and 500-year storm events.

Portions of the WWTP site have been identified by the Federal Emergency Management Agency (FEMA) to be located within both the floodplain and floodway. Based on the FEMA mapped areas, the City of Houston identified the site to be within a Conveyance Zone due to the floodway buffer. Kimley-Horn performed a preliminary hydraulic analysis to determine the impacts of the proposed improvements associated with the re-development project. The hydraulic analysis was performed using U.S. Army Corps of Engineers (USACE) Hydrologic Engineering Center River Analysis System (HEC-RAS) v.5.0.7 hydraulic modeling software. Kimley-Horn obtained the current effective hydraulic model for D100-00-00 (Brays Bayou) from the Harris County Flood Control District (HCFCD) Model and Map Management (M3) system for the analysis. Topographic information for the subject tract was obtained from on-ground survey provided by Windrose Land Services dated July 8, 2021 and supplemented with 2018 LIDAR topographic information from

Texas Natural Resources Information System (TNRIS). Kimley-Horn used the effective 10-, 50-, 100-, and 500-year flow data for the analysis. Table 9 summarizes the stormwater flow conveying through the WWTP parcel in various storm events.

Table 9: Storm Event Flow Information

Storm Event	10-Year	50-Year	100-Year	500-Year
Flow (cfs)	28,200	30,333	31,831	36,226

6.3.1 REVISED EXISTING MODEL

The effective hydraulic model for Brays Bayou does not include any cross sections within the property boundary of the subject tract. Kimley-Horn added two cross sections to the Revised Existing condition model for this analysis. The cross sections created are at river stations 63311 and 62990. Topographic information for the cross sections were from on-ground survey supplemented with 2018 Light Detection and Ranging (LIDAR) elevation data from Texas Natural Resources Information System (TNRIS). Kimley-Horn verified the effective model's Manning's "n" values used at the cross sections immediately upstream and downstream of the subject tract and maintained those values for the added cross sections. The existing structures were incorporated into the model as blocked obstructions if they were watertight, and as ineffective flow areas if they were not watertight. For comparison with the existing model, the revised model established base level water surface elevations (WSEL) for the 10-, 50-, 100-, and 500-year events. Appendix H includes the revised existing modeling output.

6.3.2 PROPOSED MODEL

From the revised existing model, Kimley-Horn created a proposed condition model by adding the proposed improvements as blocked obstructions. The proposed improvements included the east and west control building options and concrete filtration tank. The proposed improvements affected the geometry of cross sections 63311 and 62990. Water surface elevations were established for the 10-, 50-, 100-, and 500-year events to use for comparison with the revised existing model. Appendix H shows the proposed condition modeling output.

6.3.3 HYDRAULIC MODEL RESULTS

Results of the hydraulic analysis show the proposed improvements will not cause an increase in WSEL at the site nor upstream in the 10-, 50-, 100-, and 500-year storm events. The subject tract covers river stations 62990 to 63311. Table 10 shows the 100-year WSEL for revised existing and proposed conditions and a comparison of the proposed condition WSEL minus the revised existing condition WSEL.

Table 10: 100-Year WSEL Comparison

River Station	Revised Existing WSEL (ft)	Proposed WSEL (ft)	∆WSEL (ft)
63311	48.47	48.46	-0.01
62990	48.43	48.43	0.00

SECTION 7 STRUCTURAL DESIGN

The section presents the structural design criteria and assumptions for the proposed new structures at West University Place WWTP as part of the improvements and rehabilitation of the plant. This section includes the applicable codes and standards, design criteria, design approach, and considerations for the design of the structures.

7.1 DESIGN CRITERIA

7.1.1 APPLICABLE CODES AND STANDARDS

The following is a complied list of the applicable codes and standards used for the preliminary structural design:

- International Code Council (ICC)
  - 2018 International Building Code (2018 IBC)
- American Concrete Institute (ACI)
  - Building Code Requirements for Structural Concrete (ACI 318)
  - Environmental Structures: Code Requirements (ACI 350-06)
  - Foundations for Dynamic Equipment (ACI 351.3R-04)
  - Building Code Requirements for Masonry Structures (ACI 530.1)
  - Seismic Design of Liquid Containing Concrete Structures (ACI 350.03)
- American Society of Civil Engineers (ASCE)
  - ASCE/SEI 7-16 Minimum Design Loads and Associated Criteria for Building and Other Structures.
- Aluminum Association, Inc.
  - Aluminum Design Manual-Specification for Aluminum Structures-Building Load and Resistance Factor Design, 3rd Edition.

7.1.2 MINIMUM DESIGN CRITERIA

The structural design will meet or exceed the minimum design criteria for materials, gravity loads, live loads, and lateral loads as set forth in 2018 IBC. This subsection provides the minimum design criteria of each these load categories to be used on this project.

7.1.3 CONCRETE

The concrete materials used for this project are in accordance with ACI 350 and ACI 318 and are summarized in Table 11.

Table 11: Cast-in-Place Concrete

	Criteria	Notes
Structural Concrete	f'c = 4,000 psi, minimum	
Steel Reinforcement	fy = 60,000 psi, ASTM A615 Carbon Steel	Epoxy coated reinforcing will not be used

7.1.4 STEEL

The materials used in this project will be in accordance with the City's preferred materials and the design codes (see Table 12).

Table 12: Steel, Aluminum, Miscellaneous Metal, and Anchors

	Criteria	Notes
Miscellaneous Metals		Aluminum or Type 316 Stainless Steel as required by application
High Strength Bolts	ASTM A325	
Anchor Bolts	ASTM F1554, Grade 55 Weldable	
Adhesive Anchors		316 Stainless Steel

7.1.5 GRAVITY LOADS

7.1.5.1 Dead Loads

The dead loads used for the structural design will be in accordance with IBC 1606 "Dead Loads". These include but are not limited to the following:

- Weights of the structural components.
- Process fluids in the treatment basins.
- Weights of mechanical and electrical components. See Table 13 below for the operating weights for the components.
- Weights of Architectural components and cladding

Table 13: Mechanical and Electrical Component Weight

	Operating Weight (Each)
Grit Chamber (Dry Weight)	2,200 lbs
Grit Classifier	1,300 lbs.
Mechanical Headworks	2,650 lbs.
Blower Units	3,563 lbs.
Electrical MCC	TBD

7.1.5.2 Live Loads

The minimum live loads requirements used for the structural design will be in accordance with the IBC Section 1607 “Live Loads” (see Table 14).

Table 14: Live Loads

	Uniform Load	Concentrated Load
Laboratory	100 psf	Heaviest Component
Electrical Room	250 psf	2,000 lbs. or Heaviest Component
Control Room	150 psf	2,000 lbs. or Heaviest Component
Elevated Platform/Stairs	100 psf	

7.1.6 LATERAL LOADS

7.1.6.1 Wind Loads

The design wind loads will be in accordance with the IBC Section 1609 “Wind Loads” and ASCE 7-16. The design criteria include, but are not limited to, the following:

- Per Figure 1609.3(2) in the IBC, Harris County design wind speed is between 140 to 150 mph.
- The majority of the structures for this project are considered to be in Occupancy Category III due to the potential economic impact and/or mass disruption of day-to-day civilian lift in the event of failure.
- The location of the treatment plant is in open terrain with limited obstruction in each wind direction; therefore, the design is based on Exposure Category C, per ASCE 7-16, Section 26.7.3.

7.1.6.2 Seismic Loads

The design seismic loads will be in accordance with IBC Section 1613 “Earthquake Loads”, ASCE 7-16, and ACI 350.3. The design criteria for the treatment plant includes, but is not limited to the following:

- The Geotechnical Report (refer to Section 6.2 and Appendix G) specifies the site as Seismic Site Class D.
- The maximum considered earthquake (MCE) spectral response acceleration at 0.2 seconds period (Ss) is equal to 0.067g, and the spectral response acceleration at 1 second period (S1) is equal to 0.039g.
- The Importance Factor for seismic design is 1.25 per Table 1.5-2 in ASCE 7-16 (Occupancy Category III).
- In accordance with ASCE 7-16, the MCE spectral response acceleration parameters are equal to Ss and S1, multiplied by 2/3 and a factor to adjust for the Site Class effects. The parameter for the short period (Sds) is equal to 0.071, and the parameter for the 1 second period (Sd1) is equal to 0.062.
- Based on the above parameters and an Occupancy Category of III, the seismic design category for the structures is specified by ASCE 7-16 Section 11.6 as Seismic Design Category A.

7.2 GEOTECHNICAL CONSIDERATIONS

The final design geotechnical analysis for the project will be completed later in the project design. A draft of the geotechnical engineering report was provided by Gorrondona Engineering Services, Inc., on June 24, 2021. The parameters listed in Table 15 are the initial design criteria used for the preliminary structural design.

Table 15: Geotechnical Parameters

Subject	Criteria	Comments
Seismic Site Class	Site Class D	Stiff Soils
Calculated PVR	1.5 to 2.5 inches	TxDOT Method Tex-124-E
Mat Foundation (Lift Station) 24-ft Below Grade	Allowable Bearing Pressure: 4,000 psf	
Underreamed Drilled Piers	Bearing (Net Total): 5,250 psf Bearing (Net Dead/Live Sustained): 3,500 psf	Shaft/Diameter Ratio: Minimum 2 to 1 Maximum 3 to 1

	Uplift: 1,000 psf on Upper 8-ft Uplift Resistance:	
Design Lateral Pressure at Below Grade Walls	Undrained Equivalent Fluid Pressure: 105 psf/ft	
Extreme Design Case for Buoyancy/High Water Level	500-yr Flood Elevation: 50.85	

7.3 STRUCTURAL ASSESSMENT

This section presents the condition assessment results from the preliminary site visit on May 12, 2021. The observations for each are presented independently for the purposes of documentation, comparison, and pricing.

The approach to performing the condition assessments consisted largely of JQ personnel performing non-destructive visual field assessments of the existing facilities. In addition, JQ performed the following tasks as part of the evaluation:

- Reviewed previous record drawings of the treatment basis and dewatering facility (1980 drawings by Bayshore Engineers, Inc.)
- Reviewed the Flood Resiliency Study performed by IDS Engineering Group in October 2020

Destructive concrete testing (concrete coring) may be required later in the project in the event that conditions are discovered in future site visits that may present difficulties in determining the structural conditions present or in determining appropriate costs for recommended repairs. The assessment for the portions of the structure that could observed indicated that most concrete was in either good condition or was not severely deteriorated.

7.3.1 EXISTING STRUCTURE DESCRIPTIONS

Based on the record drawings, the structural design of the existing treatment plant consists of the following primary design elements:

- Lift Station/Headworks
    - The lift station consists of a screw pump layout with a lower below grade concrete wet well that has an approximate plan dimension of 28-ft by 28-ft.
    - The foundation slab is located at approximate elevation of EL 36.5, and the top of wall elevation is approximately at EL 48.5.

- The foundation slab and perimeter walls of the wet well are approximately 12-in thick.
- The screw pump discharges into an above grade concrete channel that is supported by concrete columns and underreamed drilled concrete piers. The plan dimensions of the elevated channel are approximately 28-ft by 10-ft.
- The lower slab of the channel is located at approximate elevation of EL 58.0, and the wall and slab of the channel have an approximate thickness of 12-in.

- Treatment Basins
  - The digestor, gravity thickener, aeration basins, clarifiers, and disinfection basins are all a part of the same cast-in-place concrete structure. The overall plan dimensions of the treatment basins are approximately 92-ft by 155-ft. The 75-ft diameter circular clarifiers add an additional 30-ft (plus/minus) to each side of the complex.
  - The top of concrete for the walls and walkways is approximately at EL 58.0, and the top of concrete elevation of the foundation slab is at either EL 42.0 or EL 34.0, depending on the basin within structure.
  - Most of the exterior walls for the treatment basins are approximately 18-in thick. Two of the walls for the 16-ft deep gravity thickener are 14-in thick.
  - The circular clarifiers walls are approximately 12-in thick, and the depth of the basin is 16-ft deep at the perimeter wall. The bottom slab slopes down to the center column at a 12:1.75 ratio, and the top of concrete elevation at the center column is approximately at EL 36.73.
  - The foundation slab of the treatment basin is approximately 18-in thick.
- Blower Pad
  - The blower pad consists of the cast-in-place concrete slab bearing on compacted granular fill. There is a perimeter grade with an approximately depth of 5-ft and width of 12-in at the base.
  - The plan dimensions of the pad are approximately 33-ft by 19-ft, and the approximate slab thickness is 6-in.
  - The blowers are covered by a pre-engineered, pre-fabricated galvanized steel canopy.
- Control Building (Office, Laboratory, and Electrical MCC)

- The existing control building consists of a load bearing CMU structure bearing on a cast-in-place concrete slab on compacted subgrade. The roof consists of precast hollow core planks bearing at the top of the CMU walls.
- The CMU walls are 8-in nominal masonry blocks reinforced with an unknown steel reinforcing size and spacing. The callouts on the PDF version of the record drawings are not readable.
- The plan dimensions of the existing control building are approximately 48-ft by 25-ft, and the wall height for the building is approximately 8'-8".
- The precast hollow core planks originally topped with a fiber board insulation and a 4-ply built-up roof.

- Dewatering Facility
  - The dewatering facility consists of an elevated cast-in-place concrete slab supported on column columns and underreamed drilled concrete piers. The facility is enclosed by a pre-engineering metal building anchored to the elevated slab.
  - The top of concrete elevation for the elevated slab is approximately at EL 63.5, the existing grade elevation at the base of the concrete column is at approximately EL 48.0.
  - The facility has a plan dimension of approximately 30-ft by 25-ft.
  - The elevated slab is an approximately 6-in thick concrete slab with 12-in by 18-in deep beams at the perimeter and at the interior along two column lines.
  - There are eight concrete columns supporting the slab, four on the north end and four on the south end. The columns are approximately 12-in by 12-in and are spaced at around 8-ft centers in the east/west direction.
  - The slab and columns act together as a moment frame in each direction to handle the lateral loading from the wind or seismic loads. It is assumed the base of the column is pinned, which means it does not transmit moment into the concrete pier.
  - The underreamed drilled concrete piers have an approximate diameter of 18-in and have a 36-in diameter bell. The piers are called out to bear at approximately 10-ft below grade.

7.3.2 TREATMENT BASINS CONDITION ASSESSMENT

JQ performed observations of the existing treatment basins during a site visit on May 12, 2021. The treatment basins were in-service during the site visit which limited the observations of the

interior surface and foundation slab of the existing structure. Some of the information presented below is based on what the anticipated condition of the concrete from previous experiences with similar treatment basins.

7.3.3 FOUNDATIONS

As mentioned above, most of the treatment basins were in use during the site visit which prevented a visual assessment of the foundation slab from being performed. Clarifier No. 2 and Chlorine Contact Basin No. 2 were drained for current construction within the clarifier which allowed a general overview on the condition of the foundation (shown in Figure 15). The following are the general observations on the clarifier foundation:

- The top surface of the foundation slab is generally in good condition. It is assumed the top surface is the 2-in grout topping called out on the record drawings.
- There are shrinkage cracks (shown in Figure 16) running radially at the outer third of the grout topping, which is typical for unreinforced toppings.

Figure 15: Clarifier No. 2 Foundation



Figure 16: Shrinkage Cracking



It is assumed the top surface for majority of the foundation slabs in all of the basins will generally be in good condition. The only areas that typically see deterioration on the top surface of the foundation slab are at chemical injection points or at locations of high-water velocity which can cause surface erosion.

7.3.4 EXTERIOR AND INTERIOR WALLS

The above grade exterior surface of the perimeter walls of the treatment basins were able to be observed during the site visit. The following are the key observations for the exterior surface:

- The concrete surface for the visible portions of the wall were generally in good conditions.
- There are visible shrinkage cracks spaced about 10-ft to 15-ft along the wall that most likely occurred just after construction was completed. The cracks had some efflorescence on the exterior surface, but no visible active leaking was seen thru the crack.
- There are some diagonal cracks (shown in Figure 17) with efflorescence on the walls of the circular clarifiers near the location of intersecting walls. Circular walls typically want to remain in uniform tension or compression around the entire structure. When other walls intersect the circular wall a zone of stresses transitioning from horizontal to vertical (and vice versa) can create diagonal cracking. Further analysis on the cracks will be performed at the next phase of the project.

Figure 17: Diagonal Cracks at Wall Intersection



- Figure 18 shows vertical and diagonal cracks with heavy efflorescence on the west side of Clarifier No. 1. No active leaking was observed at the time of the site visit. The vertical cracking can occur on circular walls at locations where the tensile stress is the highest, and most likely occurred when the basin was full of water and soil near the wall was excavated. The potential cause of the diagonal cracking will be evaluated during the next phase of the project.

Figure 18: Vertical and Diagonal Crack Clarifier No. 1



- Figure 19 shows the effluent box from the Chlorine Contact Basins No. 1 and 2, there are significant vertical and diagonal cracks at the wall corners and end walls. Figure 20 shows the vertical crack at the wall corner occurs in line with the inside face of the intersecting wall beyond, which means the steel reinforcing at the wall corner is the only thing keeping the wall from pushing further outwards and failing. If the crack occurs thru the entire wall depth, then the steel reinforcing will be exposed to process fluids and corrode over time. With enough section loss due to corrosion, the steel reinforcing will fail in tension and the wall will lose containment.

Figure 19: Cracking at Effluent



Figure 20: Vertical Cracking at Effluent



Most of the interior walls of the treatment basins were not visible during site visit since they were in use. The interior surface of the walls at Clarifier No. 2 and Chlorine Contact Basin No. 2 were visible due to being down for construction. The following are the key observations for the Clarifier and Chlorine Contact, along with assumptions of the remaining interior based on experience:

- The interior surface of the Clarifier walls is generally in good condition. There is minor matrix loss for around 1-ft below the operating level of the clarifier. Aggregate below the surface was not visible in the areas of matrix loss.
- The wall surface of the Chlorine Contact Basin is generally in good condition. There are minimal areas of matrix loss before the operating level.
- It is assumed the condition of the walls in Clarifier No. 1 and Contact Basin No. 1 will be similar to Basin No. 2. It is preferable for a visual observation to be performed if the basin are drained in the future phases.
- Since the treatment basins are open top structures, it is anticipated that concrete deterioration is minor for the majority of the interior wall surfaces. Similar the foundation slab, main areas of concrete deterioration will occur at chemical injection points and locations exposed to high velocity flows.

7.3.5 LIFT STATION/HEADWORKS

The lift station/headworks facility was observed during the May site visit. The key observations are noted below:

- The elevated channel at the discharge of the screw pump has some horizontal cracking in the walls just above the slab of the channel. The cracking appears to be from deflection of the unsupported edge of the channel.
- The concrete surface generally appear to be in good condition.
- Most of the lift station and headworks will be demolished to the new grit chamber and headworks.

7.3.6 CONTROL BUILDING

The existing control building generally appeared to be in good condition during a brief walkthrough the building during the site visit. The following are the key observations of the building:

- Little to no significant cracking was observed on the perimeter CMU walls.
- The bottom side of the precast roof had little to no visible cracking.
- The roofing material over the precast roof planks appear to have reached in the end of its useful service life (shown in Figure 21). The built-up roof plys are sagging into the

insulation board, and multiple areas of deterioration from ponding water are visible on the roof.

Figure 21: View of Existing Control Building Roof



7.3.7 DEWATERING FACILITY

The dewatering facility overall appeared to be in good condition with some of areas of concrete deterioration that need immediate repairs.

7.3.7.1 Columns and Upper Slab

The existing columns and upper slab were visually observed from the ground level and from the operating level of the facility. The following are the key observations from the site visit:

- The center of the north columns of the structure were placed slightly off-center from the top of the piers. Little to no signs of distress were observed due to this condition.
- The concrete surface of the columns is generally in good condition. At the southwest corner of the existing control building, a spall has developed at the column to slab connection which has left a few of the column vertical reinforcing exposed (shown in Figure 22). The steel reinforcing has a moderate amount of corrosion.
- The elevated concrete slab and beams of the facility are generally in good condition. There is a concrete spall along the top of the east beam of the structure, which has an

approximate dimension of 4-ft by 3-in. It located under the base angle of the building enclosure, and there is a longitudinal beam reinforcing exposed due to the spall.

- There is a tripping hazard between the GBT units in the facility, the grate for the floor drain has failed which leaves the floor drain opening exposed to be stepped into.

Figure 22: Concrete Spall at Column



7.3.7.2 Control Building Enclosure

The following are the key observations from the visual assessment of the PEMB enclosure for the facility:

- The visible portions of the building exterior generally appear to be in good condition. The upper surface of the roof was not observed during the site visit.
- The girts and purlins of the building have areas where the galvanizing protection has failed and corroded (shown in Figure 23).
- The primary framing of the building generally appears to be in good condition with minor spots of corrosion.
- The east overhead rolling door remains opened, which creates a potentially dangerous fall condition for personnel when working in the facility (shown in Figure 24). Two chains are currently draped across the opening, but typically are not considered the OSHA recommended fall prevention for that width of opening. The opening should probably be protected by a removable aluminum railing section.

Figure 23: Corrosion at Building Girts



Figure 24: Opening at Overhead Door



7.4 STRUCTURAL REHABILITATION/REPAIR RECOMMENDATIONS

The treatment structures and dewatering facility are approximately 40-years old and are in need of general improvements to structural components to extend the service life of the facility and improve its operational reliability. The primary structure is in good condition and only minor improvements of a maintenance nature are required at this time. The following discussion identifies the recommended improvements.

7.4.1 TREATMENT BASINS

The primary structural repairs recommended consist largely of repair and protection of the concrete walls and walkways for the treatment basins. Specific improvements are as follows.

7.4.1.1 Concrete Wall and Walkway Repairs

- **Repair all concrete deterioration at interior surface of walls**. Since the treatment basins were in service during the site visit, the potential areas of deterioration are assumed to occur within the upper 2-ft to 3-ft of the wall. For cost purposes, the repair of only the upper 30-inches of the walls with a 1/2-inch thick repair mortar to repair any deterioration and correct any deficiencies to accommodate coatings applications. These repairs will be mainly occur at the walls of the Aeration Basin and the Mixing Basin.
- **Inject the structural cracks at the Chlorine Contact Effluent.** The cracks will be repaired with an epoxy injection material similar to Sikadur 52. The epoxy injection materials have a relatively high tensile and compressive strength in relation to the

surrounding concrete. They have a low viscosity that allows penetration into the crack which ensures a permanent and durable load transfer between the elements on each side of the crack. It requires the base material to be in a dry or damp condition, therefore it is preferable for the basin to be drained during the injection process to avoid water running thru the crack and displacing the material before it sets.

- **Inject any other cracks that exhibit recent active leaks.** For cost purposes, it will be assumed that some of the vertical and diagonal cracks observed during the site visit may require repair with a hydrophobic polyurethane injection material typically used to seal active leaks. The material will be similar to SikaFix HH LV or De Neef Flex LV PURe.

7.4.2 DEWATERING FACILITY

The dewatering facility rehabilitation mainly consists of repairs and protection of the existing reinforcing at the top of the concrete columns. Specific improvements are as follows:

- Repair the concrete spall at the southwest corner of the dewatering building. The repair will consist of chipping away any unsound concrete, including around the existing reinforcing if more than one-half of the bar diameter is exposed. Then the exposed reinforcing will be coated with a corrosion protectant similar to Sika Armatec, and the spall will be repaired with an epoxy repair grout.
- Repair the concrete spall along the east edge of the building. The repair process will be similar to the above spall repair. There is some complexity involved with getting access to the spall which may require removal and replacement of the building panels in framing in the immediate area of the repair.
- Clean of the corroded areas of the building's girts and recoat the areas with a zinc rich galvanizing repair paint.
- Provide a removeable railing section at the overhead door opening.

7.5 STRUCTURAL DESIGN OF NEW CONTROL BUILDING

This section provides the design considerations and preliminary structural sizing for the new control building and treatment structures included in the improvements at the plant.

7.5.1 CONTROL BUILDING (WEST OPTION)

The foundation and perimeter walls for the control building will consist of above grade conventionally reinforced concrete slabs and walls supported on concrete piers. As discussed in other sections of the PER, the finished floor of the control building will at least be 3-ft above the 500-yr flood elevation of 50.85. The final elevation will be determined later in the design as coordination with the City of West University Place, City of Houston, and Harris County requirements for structures in a floodway continue throughout the design. The following are the key characteristics for the control building structure:

- The pier will be underreamed drilled concrete piers with an approximate diameter of 30-in and a bell diameter between 72-in to 90-in. The piers will be spaced between 10-ft to 15-ft on center. The preliminary pier total for the west option is twenty (20) piers.
- The bearing stratum for the piers will be the native clayey soils at 10-ft to 11-ft below grade.
- The above grade foundation slab is preliminarily sized as a 36-in thick concrete slab to provide a conservative estimate on the concrete quantity. The approximate plan dimensions for the foundation slab are 42-ft by 70-ft.
- Some cantilever concrete elements will be provided along the edge of the slab to help support the stainless-steel walkway mentioned in the Architectural section of the report.
- The perimeter walls of the control building will be cast-in-place concrete with an approximate thickness of 12-in. The exterior surface will consist of either architecturally exposed concrete or a textured architectural coating.
- The roof framing of the building will consist of either precast double-tees or precast concrete slab supported by cast-in-place beams and columns.

During the geotechnical field investigation, two of the borings (Boring B-04, bored twice) had to be stopped due to refusal. Based on historical photos included in the draft Geotechnical Report and the record drawings for the current plant, the previous wastewater treatment plant was in the general area of the proposed west option. With refusal on the geotechnical boring, it is assumed the below grade foundations of the original plant were abandoned in place. To construct the west option of the control building a portion of the existing foundations will need to be demolished of cored thru to install the concrete piers. Costs were included in the preliminary OPCC to account for excavation and partial demolition of the abandoned foundation.

The west option has advantages and disadvantages compared to the east option. The following are the key advantages/disadvantages of this option:

Advantages:

- Construction access is readily available on all sides of the building.
- Walkway bridge access from the building to the treatment basins will not impede truck traffic on the plant site.
- There are no known electrical ductbanks that conflict with potential pier locations.

Disadvantages:

- Potential demolition required for abandoned concrete foundations from the original plant.

7.5.2 CONTROL BUILDING (EAST OPTION)

Similar to the West Option, the foundation and perimeter walls for the control building will consist of above grade conventionally reinforced concrete slabs and walls supported on concrete piers. The finished floor of the control building will at least be 3-ft above the 500-yr flood elevation of 50.85. The following are the key characteristics for the control building structure:

- The pier will be underreamed drilled concrete piers with an approximate diameter of 30-in and a bell diameter between 72-in to 90-in. The piers will be spaced between 10-ft to 15-ft on center. The preliminary pier total for the east option is twelve (12) piers.
- The bearing stratum for the piers will be the native clayey soils at 10-ft to 11-ft below grade.
- The above grade foundation slab is preliminarily sized as a 36-in thick concrete slab to provide a conservative estimate on the concrete quantity. The approximate plan dimensions for the foundation slab are 39-ft by 55-ft.
- Some cantilever concrete elements will be provided along the edge of the slab to help support the stainless-steel walkway mentioned in the Architectural section of the report.
- The perimeter walls of the control building will be cast-in-place concrete with an approximate thickness of 12-in. The exterior surface will consist of either architecturally exposed concrete or a textured architectural coating.
- The roof framing of the building will consist of either precast double-tees or precast concrete slab supported by cast-in-place beams and columns.

The east option has advantages and disadvantages compared to the west option. The following are the key advantages/disadvantages of this option:

Advantages:

- Close to the location of the current control building.

Disadvantages:

- Limited construction access to the south and east side of the proposed control building.
- Existing electrical ductbanks running from the MCC room to the treatment basins would be in direct conflict with concrete piers at the northwest corner of the building foundation. A large slab cantilever would be required at the northwest corner of the building due to the lack of piers at the corner.
- Any walkway bridge from the east option to the treatment basins would interfere with traffic at the plant unless it was raised above the floor level of the building.

Preliminary design considered an option to construct the east option of the control building above the existing control building. The design team determined that it is not feasible to construct the new building directly above the existing building, the following are the key disadvantages:

- The space between the existing control building and the emergency generator is limited and will be inaccessible for the drilling equipment for the concrete piers. Partial removal and replacement of the operating platform on the southside of the generator could provide additional space, but is it anticipated the northeast corner of the building would still be inaccessible.
- The roof of the existing building would be inaccessible after the new building was constructed. Any current vents at the roof would need to be rerouted or removed. The roof would not be accessible for service or maintenance.
- The existing ductbanks running from the MCC to the basins would prevent the construction of drilled piers at the southwest corner of the building.
- The CMU walls of the existing control building would not be able to support any portion of the new building.

7.6 STRUCTURAL DESIGN OF OTHER PROPOSED STRUCTURES

7.6.1 LIFT STATION

The new lift station will consist of a below grade conventionally reinforced concrete structure to a provide a wet well and foundation for the proposed submersible pumps described in the Mechanical section of the preliminary engineering report. The lift station will be constructed using either a “sunken caisson” method or in an open excavation using braced shoring. The OPCC for the lift station assumes braced shoring will be utilized to provide a conservative cost estimate. The following are the key characteristics for the lift station:

- Circular wet well with an approximate interior diameter of 18-ft, and an approximate depth of 23-ft.
- The wet well walls will have an approximate thickness of 18 to 20-in.
- The foundation slab will be located at EL 23.00 and will have an approximate thickness of 30-in.
- The upper slab will be located at EL 46.00 and will have an approximate thickness of 18-in.
- Protective concrete coating on the interior wall and slab soffit surfaces.
- Grout fillets around the pumps as required for flow/vortex control.

As part of any design for a below grade structure, the hydrostatic uplift (buoyancy) caused by groundwater must be accounted for in the sizing of structural components. During final design the buoyancy will be calculated assuming the groundwater levels are at the 500-year flood elevation of EL 50.85. The resistance to buoyancy will be provided by the self-weight of the structure and soil friction at the exterior surface of the wet well walls. If open excavation is utilized by the Contractor, a slab extension past the face of the wall can be constructed to use the weight of the soil above the extension to resist buoyancy.

7.6.2 GRIT CHAMBER/HEADWORKS

The Grit Chamber and Headworks will consist of a new above grade conventionally reinforced concrete structure supported on piers. The Grit Chamber will have a vortex grit removal system in the basin and a grit classifier at the upper slab/framing of the chamber. The following are the key characteristics of the structure:

- The piers will be underreamed drilled concrete piers with an approximate diameter of 30-in and a bell diameter between 72-in to 90-in. The piers will be founded around 10-ft below grade.
- The foundation slab of the grit chamber will be at EL 52.85 and have an approximate thickness of 24-in.
- The interior dimensions of the grit chamber will be 12-ft by 13-ft, and the depth will approximately be 16-ft.
- The walls of the grit chamber will have an approximate thickness of 18-in.
- The headworks channels will be connected to the exterior face of the grit chamber at approximately EL 62.75. The channel slab will approximately be 24-in thick.
- The walls of the headworks channels will be approximately 12-in thick and will have a height of just over 5-ft.
- The Grit Chamber and Headworks will be covered by aluminum tread plate supported by aluminum structural framing.
- Protective concrete coating will be provided at the interior face of the basin and channels.

Since the structure is entirely above grade, the walls will mainly be exposed to internal pressures of the process fluids acting on the inside face of the wall. This will keep the concrete wall and wall corners in tension for the entire service lift of the basin. As a result, some visible cracking may develop over time at the exterior and interior face of the concrete wall. The design intent will be to limit the crack width by keeping the tensile stress in the steel reinforcing below the minimum allowable by the durability limits in ACI 350. Limiting the crack width reduces the amount of water intrusion into the concrete cracks that can lead to corrosion of the reinforcing and concrete spalling.

7.6.3 BLOWER PAD

The blower pad will consist of an above grade conventionally reinforced concrete slab supported on concrete piers. The slab will be designed, as needed, to provide a fundamental frequency that meets the vibration requirements of ACI 351.3 R-04, but it is assumed the blower units will bear on isolators that limit the amount of vibration transmitted to the concrete structure. The following are the key structural characteristics of the blower pad:

- The piers will be underreamed drilled concrete piers with an approximate diameter of 24 to 30-in, and a bell diameter between 48-in and 72-in.
- The concrete slab will be located at EL 53.85 and will have an approximate thickness of 20 to 24-in.
- Aluminum stairs to provide access to the pad from the ground level

7.6.4 TRANSFORMER PLATFORM

The new electrical transformer will be located on an elevated platform to keep the electrical equipment above the 500-yr flood elevation. A part of the platform will be a conventionally reinforced concrete slab supported by concreter piers, and the rest of the platform will be either aluminum framing or galvanized steel framing supported by concrete piers. The following are the key structural characteristics of the platform:

- The piers will be underreamed drilled concrete piers with an approximate diameter of 24-in, and a bell diameter between 48-in and 60-in.
- The overall platform dimensions will be approximately 16-ft by 24-ft.
- The concrete slab will be located above EL 53.85, and will have an approximate thickness of 18-in.
- Aluminum or steel stairs to provide access to the platform from existing grade.
- Aluminum railing at the perimeter for fall protection.

SECTION 8 ELECTRICAL DESIGN

Electricity to the Waste Water Treatment Plant (WWTP) is provided by CenterPoint Energy (CNP) from an overhead distribution system located on the Northeast corner of the property. This distribution system provides power to the WWTP via three CNP pole-mounted transformers. These transformers convert the overhead primary voltage to a 277/480Y secondary which powers an outdoor electrical service through a bus weatherhead. The outdoor electrical service is located on an elevated platform next to the backup generator platform.

The existing electrical service has a rated utility capacity of 1330 kVA and a backup generator capacity of 750 kW / 938 kVA. Current WWTP loads are calculated at 932 kVA with existing equipment run in a limited fashion when on backup power. Proposed improvements will increase the calculated load to 1059 kVA. The existing service has adequate capacity, but improvements to the utility transformers are needed to remedy a potential equipment failure, as explained in detail below.

Further improvements to the electrical service are also evaluated to address the addition of the proposed control building. These improvements are based on whether the building is located on the east side of the WWTP (east option) or on the east side of the WWTP (west option) and take into account constructability, cost, and ease of future improvements. Appendix I includes exhibit drawings ES-1 and ES-2 showing the proposed electrical site plans for each option.

8.1 EXISTING ELECTRICAL INFRASTRUCTURE

The original electrical distribution for the WWTP was constructed in the 1980 2 MGD project. The primary distribution for power was the 1200 amp motor control center (MCC) located in the existing control building, with a small backup generator and automatic transfer switch (ATS) to power the control building, as well as one of the main lift pumps. In 2011, a generator improvements project upgraded the backup generator for the facility as well as the outdoor electrical service. This allowed the whole facility to be on backup power instead of a small portion. To date, no other significant improvements have been made to the electrical distribution system. Refer to exhibit drawing E-1 for the existing one line diagram for the facility.

8.1.1 OUTDOOR ELECTRICAL SERVICE

The outdoor electrical service is comprised of three major components – a 1600 amp main breaker labeled 'MAIN SWITCHGEAR-1' (MSG-1), a 1600 amp automatic transfer switch labeled 'ATS', and a distribution panel labeled 'POWER DISTRIBUTION PANEL' (PDP). Each piece of equipment is in separate NEMA 3R enclosures and located on an elevated platform. The platform was built to elevation 52.00 to keep the equipment above the 500 year floodplain.

The outdoor electrical service is provided power from three CNP owned 500 kVA pole-mounted transformers. There are significant safety concerns with the current electrical service due to the fault current available from these transformers. The amps interrupting current (AIC) rating of MSG-1 is listed as 65 kAIC, whereas the available fault is 85,900 amps. The AIC rating of equipment identifies the equipment's ability to operate without damage during a fault condition. Because the AIC rating of the equipment is less than the available fault current, there is high probability the equipment will be damaged in the event of a 3 phase bolted fault. Due to the concerns with the high fault availability, it is recommended to address this issue as soon as possible. The recommended approach is to remove the overhead transformers and replace them with a pad-mount transformer. This will reduce the available fault current to levels well below the rating of the equipment. When evaluating the east and west options for the proposed control building, replacing the overhead transformers with a pad-mount transformer will be addressed as the primary concern for the electrical distribution.

For backup power, the electrical service is connected to a 750 kW / 938 kVA diesel generator via the ATS. The generator is also on an elevated structure to put it above the 500 year floodplain. The generator is in good condition, and it is recommended it remain in service for the east option control building evaluation. The generator is 10 years old with 10 years of design life left. For the West Option it is recommended a new generator is installed and the existing generator be removed. Optionally, the existing generator could be relocated instead, but this would limit the plant's ability to operate at full capacity, limit expansion capability, and shorten the design life of the proposed improvements.

8.1.2 Existing Control Building

The existing control building is provided power from the PDP located at the outdoor electrical service, which feeds the motor control center (MCC) located inside the electrical room of the

control building. This equipment provides power to almost all the facility and has not only exceeded its design life, but also the equipment's production cycle. With the proposal to convert this building to storage, the electrical design team recommends removing all electrical equipment from the building. A new electrical distribution would be installed in the building to reconnect HVAC, lighting, and receptacle loads, as well as power nearby buildings and equipment. The distribution would be comprised of a 277/480V panelboard and a 120/240V panelboard fed from a 480 to 120/240V single phase transformer. A new 480V feeder circuit would be provided from the electrical distribution in the proposed control building.

8.1.3 DEWATERING BUILDING

The dewatering building is provided power from a 240V feeder from distribution panel, Panel 'A', inside the existing control building, which feeds Panel 'E' inside the dewatering building. This panel is in good condition and is recommended to remain in service. With the removal of the MCC in the existing control building, Panel 'E' along with 480V electrical equipment at the dewatering building will require new power feeders. A new 480V feeder circuit will be provided from the electrical distribution in the proposed control building to power a new 480V distribution panelboard located next to Panel 'E'. This panelboard will refeed the 480V equipment in the dewatering building as well as a 480 to 120/240V single phase transformer to power Panel 'E'.

8.1.4 CHLORINE FACILITIES AREA

The electrical in the chlorine facilities area is provided power from a 240V feeder from distribution panel, Panel 'A', inside the existing control building, which feeds Panel 'C' inside the Chlorinator Building. For the proposed east option, all electrical in this area would be removed to accommodate the proposed control building. For the proposed west option, all electrical related to the chlorinators would be removed. Panel 'C' would be removed, due to age of equipment and being in a non-air-conditioned space, with the remaining lights, receptacles, and miscellaneous equipment being refed from the proposed control building.

8.1.5 MAIN PROCESS AREA

The equipment in the main process area is comprised of lift pumps, blowers, clarifiers, and transfer pumps. This equipment is powered from the MCC located in the existing control building. Equipment to remain, removed and replaced, and new proposed equipment will be powered from

a new Motor Control Center (MCC) located in the proposed control building. Underground feeder circuits will be abandoned in place, and above ground circuits will be replaced in their entirety.

The underground duct banks have been deemed unusable due to the age and construction materials used. Duct bank construction in the 1980s used galvanized rigid steel conduit embedded into concrete, which rusts and corrodes over the last 40 years, leaving the conduit raceway in a near non-existent state. Conductors can no longer be removed from long raceway runs and can only be removed if the duct bank itself is removed.

Existing panelboards 'F' and 'D' will be removed, and circuits will be refed from the proposed control building.

8.2 PROPOSED ELECTRICAL INFRASTRUCTURE IMPROVEMENTS

For the proposed improvements to the WWTF, a new CNP pad mount transformer is to be installed on an elevated concrete platform to meet the CNP service standard requirements of having the transformer located at least 1-foot above the floodplain elevation. This improvement is required for both design options to reduce the available fault current to the service equipment.

8.2.1 CONTROL BUILDING EAST OPTION

This option evaluates constructing a new control building on the east side of the plant, located at current chlorine facilities, south of the existing control building. The electrical design for this location poses significant design challenges.

The first major challenge is constructability. Because the WWTP must stay in operation during construction, to install a new service to the east option control building, the existing service must be partially removed. There is limited space along the east property line to install new feeder duct bank to the new control building, therefore the existing feeder to the MCC in the control building must be removed. The proposed pad mount transformer cannot be located south of the proposed control building as there is not enough room at this corner of the facility.

To facilitate the installation of these feeders, a temporary MCC would first need to be set up to keep the WWTP in operation. This would require a new service connection from the existing transformers to the MCC, along with temporary power and control conduits routed to equipment located in the process area. These temporary conduits also inhibit construction and would likely

create significant coordination issues with the plant rehab. With the work likely proceeding in a West to East fashion, it does not work well having the temporary and permanent conduit routing coming from the East. New work must be protected during renovation of existing because they cross each other in the process areas.

The second challenge is cost. As noted above, a temporary service would be required in order to build the proposed control building on the east side of the plant. Temporary conduit and conductors would need to be run to existing equipment, all of which has to be removed for the installation of the permanent conduit runs. Additionally, a significant portion of the existing duct bank will need to be removed to facilitate new duct bank runs from the existing control building. This is also needed to build an overhead conduit rack from the existing control building to the aeration basins. Refer to exhibit drawing ES-1 in Appendix I for proposed routing.

The third challenge is future expandability. With the proposed control building located on the far east side of the facility, any future planned expansion to the west is hampered by trying to cross the process area with power and control conduits. The east option presents significant cost, coordination, and constructability issues, from the electrical design perspective.

8.2.2 CONTROL BUILDING WEST OPTION

This option evaluates constructing the proposed control building on the West Side of the plant. It is proposed to be located West of the process area. Electrically, this presents a more ideal design as it locates the building near most of the proposed improvements.

For constructability, the west option is preferred for construction of a new electrical service while using the existing service to keep the WWTP in operation. The proposed pad mount transformer shall be located north of the proposed control building. The proposed control building can be constructed and permanent power can be provided to the building. As the renovations are being done in the process area, the permanent power and control conduits can be routed to the new equipment via an overhead conduit rack. This rack will extend from the proposed control building to the aeration basins, where the power and control conduits will separate and route to the equipment.

It is also recommended the generator be located next to the proposed transformer platform. The electrical design team recommends installing a new generator to maximize the design life of the

generator, in lieu of relocating the existing. Refer to exhibit drawing ES-2 in Appendix I for the site layout of the west option.

Cost is reduced with the west option as there is no need for significant temporary power for existing equipment. The existing blowers, clarifiers, and sludge pumps can remain in service until they are removed or refed from the existing control building. Electrical demolition work would also coordinate with the process mechanical work sequencing, proceeding from west to east.

Future expandability is simplified as the main electrical distribution is now more centrally located. Any future improvements on the west part of the site can be powered from the proposed control building.

8.3 ELECTRICAL DESIGN CRITERIA

The WWTP expansion design criteria are based on the current codes and standards in effect. Changes to criteria will reflect current applicable design/code standards where necessary.

8.3.1 ELECTRICAL CODES AND STANDARDS

The electrical system will be designed to meet or exceed all applicable codes and standards including the following:

- National Electrical Code
- IEEE-519 for VFDs
- National Safety Fire Protection Code
- MG-1: Motors and Generators
- MG-2: Installation and Operation of Electric Motors
- MG-3: Sound Level Prediction for Installed Rotating electrical Machines
- UL 1004: Standard for Safety for Electric Motors.
- ANSI C37.20: Metal-Clad Circuit Breaker Switchgear
- ANSI C57.12.00: Power, and Distribution Transformers
- IEEE 242-86: Recommended Practice for Electric Power Distribution for Industrial Plants
- IEEE 242-86: Recommended Practice for Protection and Coordination of Industrial and Commercial Power Systems

8.3.2 ELETRICAL MATERIALS OF CONSTRUCTION

The electrical system to be designed with the following materials:

- All wiring to be copper. Wiring to be installed in a conduit system.

- Exposed conduits to be rigid aluminum except where designated to be Schedule 80 PVC in chemical areas and PVC coated rigid aluminum in corrosive areas such as the lift station.
- All exposed electrical fittings to be aluminum.
- Underground to above ground conduit transition to be epoxy fiberglass. The conduits shall also have a concrete curb above grade.
- Underground conduits to be Schedule-40 PVC. Conduits outside of buildings to be installed in reinforced concrete underground duct banks.
- Spare conduits to be installed in all duct banks.
- 600-volt Insulated conductors to have Type XHHW-2 insulation.
- Analog signals to be connected with #16 twisted shielded pairs or triads, 600 volt insulated with a 100% mylar shield and drain wire.
- A grounding grid system to be installed per NEC requirements to reduce the hazards of an abnormal electrical condition.
- All junction boxes, pull boxes, control panels and electrical enclosures to be NEMA 4X, Type 316 stainless steel.
- All metallic supports to be 316 stainless steel strut channel with 316 stainless steel hardware.
- All non-metallic supports in designated chemical areas to be epoxy fiberglass.
- Plated copper bus to be used in motor control centers.
- Equipment to have appropriate arc flash warning labels.
- Electrical equipment to be UL listed where available.
- All transformers to have copper windings.

8.3.3 LIGHTING DESIGN

Table 16 below lists the lighting levels and types of fixtures that are proposed for the project.

Table 16: Lighting Levels and Fixture Types

Area	Lighting Levels	Fixture Type
Interior Process Areas	40 footcandles	LED moisture resistant
Electrical Rooms / Labs	50 footcandles	LED
Emergency Egress Lighting	-	LED with batter backup
Exterior Process Areas	1 – 5 footcandles	LED with local manual switch control
Office Areas	15 – 20 footcandles	LED with occupancy sensor control

SECTION 9 ARCHITECTURAL DESIGN

The existing 2.455 acres site in Houston, is located off North Braeswood Boulevard which borders the north property line of this site. A concrete drainage channel borders the south property line. The existing Wastewater Treatment Plant is located within residential neighborhoods with single family homes and apartments surrounding the site. Larger homes are across the drainage channel to the south. The existing facility contains various structures including clarifiers, control building, an emergency generator, as well as other structures. This PER describes a proposed control building that contains various functions such as the Motor Control Center, Laboratory, and offices. The proposed control building will need to have a minimum finish floor height of elevation 53.85' and be located so that there are clear views from the building interior to the site's operations. Another consideration due to the site location, is to be a good neighbor to the surrounding residences since the new building will be visible to many of homes.

9.1 ARCHITECTURAL PROGRAM

The program for the proposed control building has been developed from meeting with the users and operators as well as additional discussions with KHA, and from referencing other similar projects. The building's primary purpose is to house the laboratory, offices meeting space, and the Motor Control Center (MCC) in addition to other associated auxiliary spaces. The laboratory and offices will have direct visual observation of the site activity with priority to areas where the lift station, digester, thickener, and clarifiers are located. In addition to line of sight, direct access from the laboratory to these areas is also important with a direct connection to the existing elevated walkway at the existing aeration tanks. The control building also includes restrooms, a shower, and a small entry lobby. These rooms are located so that they are easily accessed upon entry and to limit tracking possibilities. A sink area and boot washing station would likely be provided in the entry lobby. Table 17 includes a breakdown of building usages.

Table 17: Control Building Space Programming

Operations Building Rooms		Square Footage
	Entry/Lobby	150
	Laboratory	220
	Office 1	145
	Office 2	145
	Open Workstations/Meeting Area	260
	Break Room	300
	Men's Toilet	60
	Women's Toilet	60
	Staff Shower/Locker Room	100
	Mechanical Room	80
	Motor Control Center/Electrical Room	290
	Janitors Closet	20
	IT/DATA – Closet	60
	General & File Storage	100
	Subtotal Square Footage	**1,990**
	Corridor/Circulation Space (15%)	299
	Walls (14%)	279
	Total Square Footage	**2,567**
	Design Contingency (5%)	128
	Total Square Footage w/ Design Contingency	**2,695**

Although the minimum required finish floor elevation is 53.85-feet, the ideal height would be 61.0-feet so that the finish floor height matches the height of the existing catwalk and a connection between the control building and existing catwalk could be accomplished without traversing steps. With the existing grade at approximately 46', the new building would need to be elevated on piers since the finish floor would be about 15' higher than the existing grade.

Regarding accessibility, the current design makes no provisions for an elevator, connecting the ground level to the proposed control building interior which is located approximately 15' above grade. Stairs only are provided. Texas Accessibility Standards require that at least one accessible route shall connect each story. However, there is an exception with conditions that states that in private buildings or facilities that are less than three stories, or that have less than 3,000 square feet per story, an accessible route shall not be required to connect stories. In past

similar projects the State has allowed this exception, but it is at their discretion upon viewing the plan. A plan has been submitted for their review and we await their decision on this matter.

9.2 BUILDING MATERIALS

There are several factors related to selecting appropriate building materials. Materials that are relatively maintenance free, durable, and have a history of longevity are essential. They will also need to be suitable for this caustic environment. With this in mind, a concrete structure is planned at this early phase of concept design along with concrete walls for the building envelope. This will offer the characteristics mentioned, as well as provide a continuity of materials with the existing concrete structures on the site. In lieu of using multiple materials for added interest, the concrete will be articulated with subtle texture patterns, with a courser pattern used at certain surfaces and a smoother pattern at the others. The concrete walls will extend up past the roof, creating a parapet that will screen most roof top mechanical equipment that may be needed. The roof will be a low sloping modified bitumen roof with an internal roof drain system. Insulated glazing is planned for all offices, the lab, break room, and lobby, to offer maximum visibility to the site from the building as well as offer the benefits of daylight to the staff.

The proposed control building is categorized by International Building Code as a Category II Structure and will require design for 139 mph wind speed. All windows will be equipped with motorized coiling screens/shutters for window protection that can be activated in anticipation of a wind event. With the building elevated above the grade, elevated walkways at the building perimeter are necessary for connecting exterior doors and ultimately to stairs that lead back to grade.

The walkway and railings will be a non-corrosive metal such as stainless steel and sloped and/or perforated to drain. This metal walk and railing will add interest and contrast to the concrete of the building. These materials are reflective of the concrete and metal facilities that are existing on the site.

Figure 25: Control Building West Location Rendering



The control building interior will need to be equipped with finishes that are appropriate for each room type but also durable, forgiving of exhibiting dirt, and relatively easy to clean. The flooring will likely be epoxy flooring for areas like the entry lobby, corridor, laboratory, and break room.

The epoxy flooring with integral cove base offers a non-permeable surface that is seamless and that is excellent for areas where items may be spilled, or soil tracked in. Porcelain tile is recommended for the restroom and shower floors and walls and vinyl flooring for the offices. Many of the interior partitions will be the typical gypsum board walls and will be equipped with stainless steel corner guards at all outside corners. Ceilings will likely be 2'x 2' lay-in acoustical tiles, apart from the restrooms and shower which will have gypsum board ceilings. Built-in cabinets will be covered with plastic laminate with solid surface counter tops. The counter tops in the laboratory will be stainless steel with stainless steel backsplash suitable for possible chemical spills. Emergency eye wash equipment will be included in the Laboratory. A stainless steel sink is included in the entry lobby for quick access and clean-up, along with a boot washing station.

9.3 OPERATIONS BUILDING LOCATION OPTIONS

Figure 26 shows two locations on the site are under consideration for the proposed control building. One located at the west portion of the site and the other at east side of the site near the east and south property lines.

Figure 26: West Option Layout for Admin Building

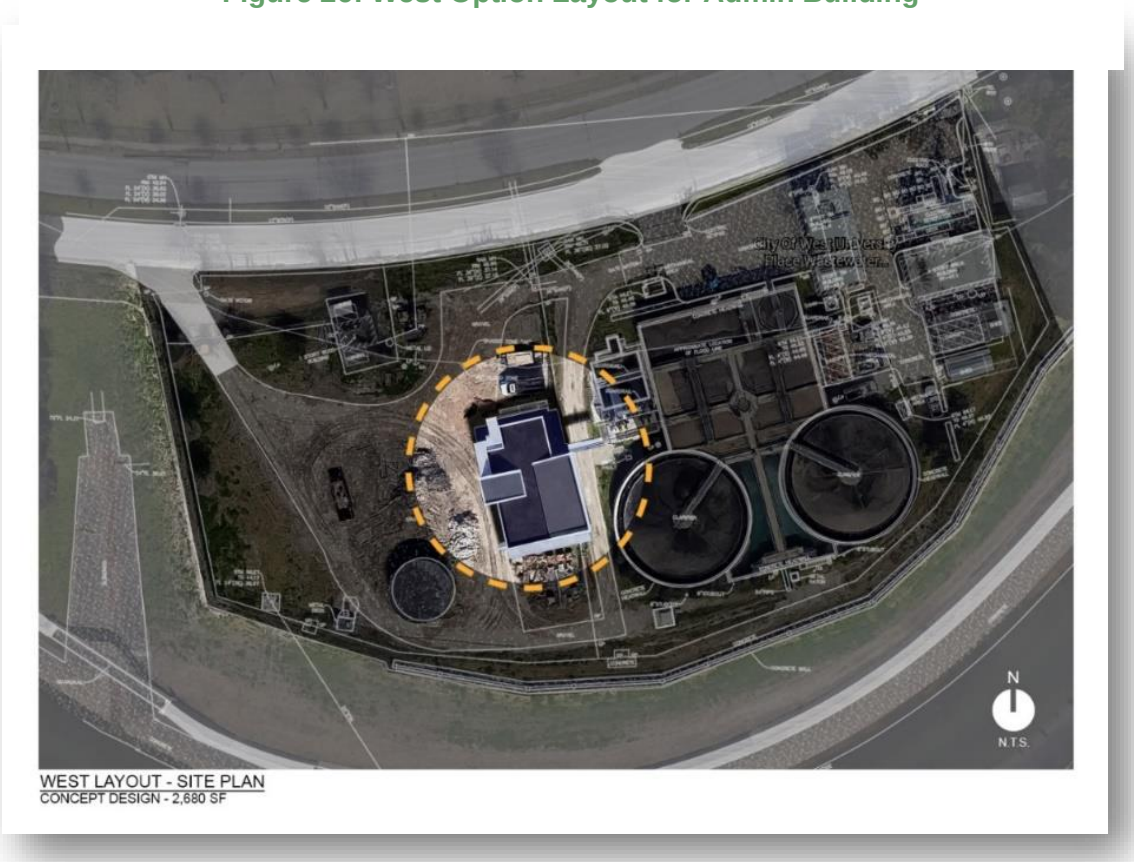

The west location is almost centered in the site and lies just west of the existing lift station. This area is a less congested area of the site and offers enough room for the Program of spaces to be fully executed.

The result is a control building that is roughly 2,700 square feet in area and containing all the rooms listed in the program (shown in Figure 27). In this scenario, the laboratory and offices face east towards the digester, thickener, aeration basins. These rooms will have large windows offering high visibility to the equipment and structures mentioned. The entry and lobby are also on the east side of the building and positioned so that there is a direct route from the building entry to the aeration basin catwalk.

Ideally the finish floor should be at elevation 61.0 feet so that it matches the catwalk elevation, which would provide a somewhat seamless circulation path without any steps between the two.

Figure 27: West Option Floor Plan

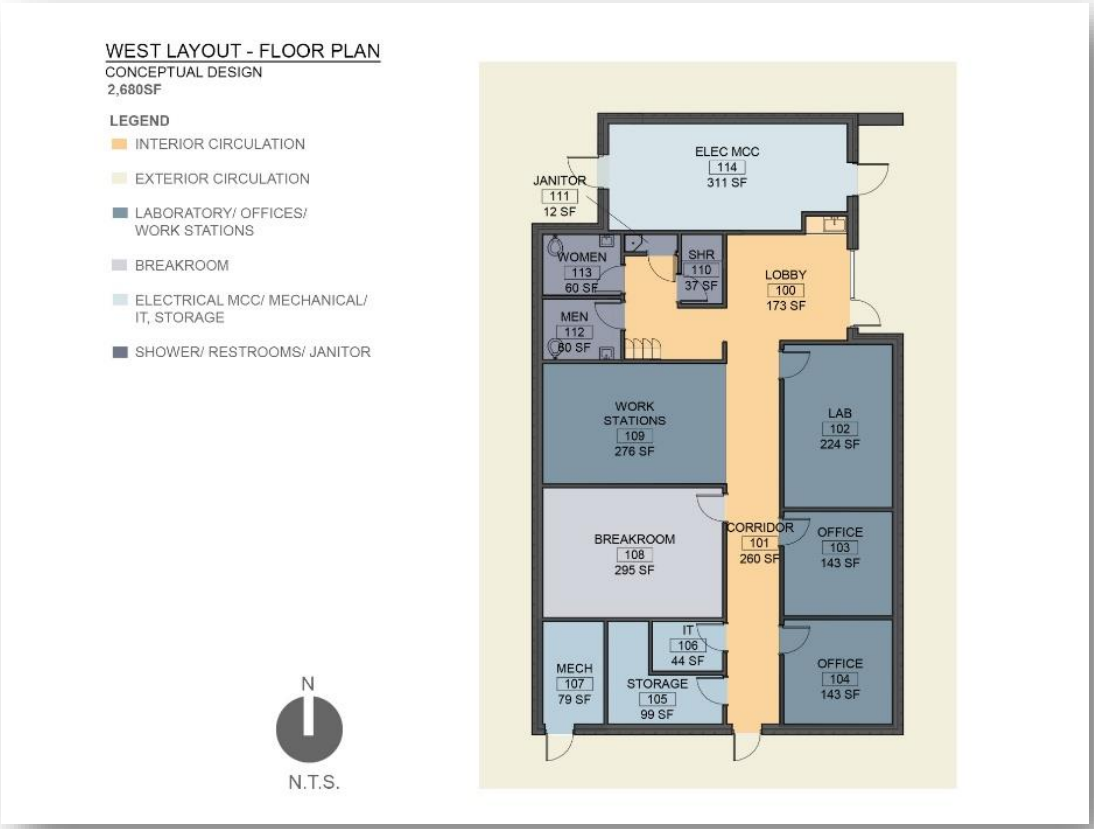

The MCC is placed at the north side of the building with independent exterior doors. Due to the type of electrical equipment contained in the space, code is requiring two egress doors from the MCC that are equipped with panic hardware. Because of the available space at this part of the site, a walkway is provided around the entire perimeter of the building to accommodate the multiple exits from the MCC room as well as help with building maintenance.

This allows for staff to observe any part of the site with a high vantage point. Not including the MCC, the control building size and occupancy load requires only one emergency exit from the building. However, because of the proposed walkway circling the building, this allows for a second exit which provides convenience and added safety in an emergency where a second exit would be valuable.

Figure 28: Control Building East Option Rendering

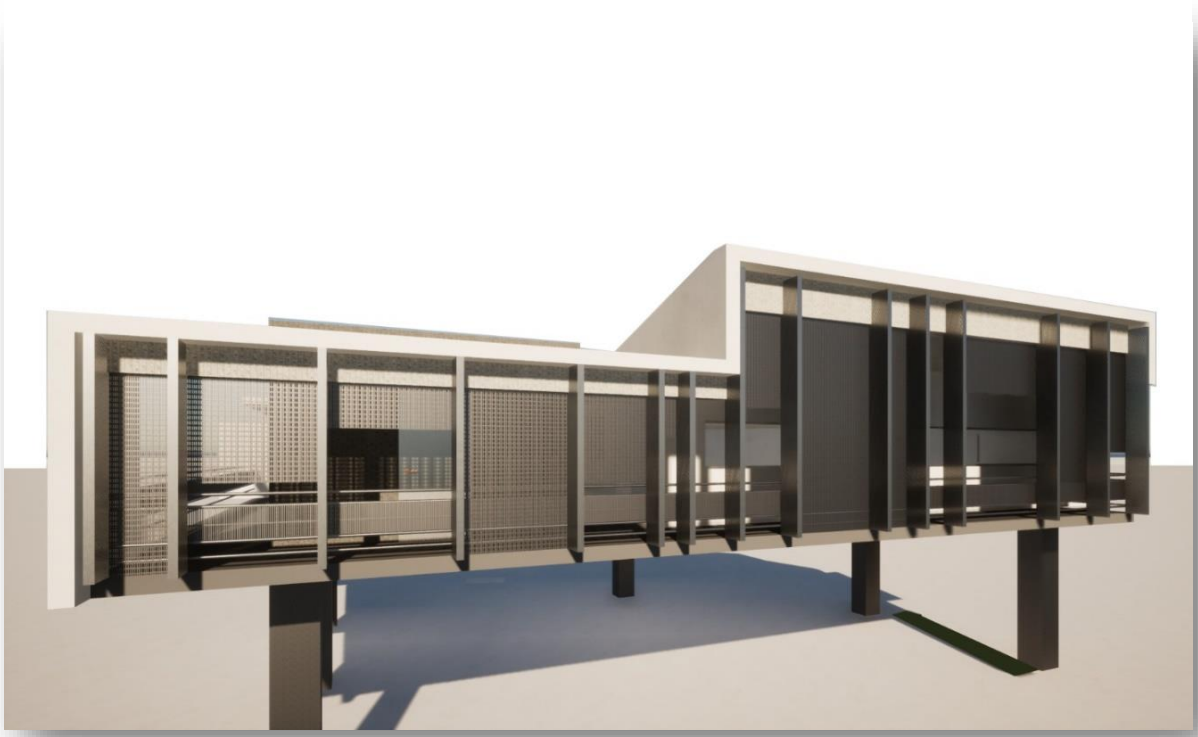

The east location is located at the southeast corner of the site and essentially aligns with the building line which is the permitted setback from the property line that a structure may be built. Five feet is the assumed setback amount. The building line location is currently being verified with the city and may be a different amount than the assumed five feet. The initial design approach for the east location was to place the proposed control building directly above the existing building. However due to the proximity of the existing emergency generator, limited accessibility for equipment, machinery and rigs for construction, power pole and existing underground conduit banks, the feasibility of this approach is very unlikely. The new structure would need to span the existing control building, which is to remain, and there is not enough clearance between the existing building and the existing emergency generator to excavate and place piers for the new building.

Additionally, the interstitial space between the existing roof and building would prohibit roof repairs

Figure 29: Site Plan East Option



EAST LAYOUT - SITE PLAN
CONCEPT DESIGN - 1,920 SF

and maintenance, since we would not be able to completely enclose the existing building roof, due to the limitations listed above and the setback requirements. The better option is to place the new building south of the existing control building and remove the existing chlorinator buildings and adjacent shed to the south. There are still challenges in this approach since existing underground conduit will still be a concern and will need to be considered in placing the structural piers at the northwest corner of the building. Other challenges associated with building in this confined area of the site include limited access and lack of space for construction equipment and staging of materials. During construction, the contractor will need to pursue creative methods for construction since the restricted access and lack of space will not allow for more conventional methods. This will certainly have an impact on the construction timeline and project cost. Careful coordination will need to be exercised so that plant operations hindered during construction.

At the east location, the Laboratory and an office will have windows facing the west for visibility to equipment and structures to the west which is the worst direction for building orientation. The MCC room conditions are the same here as in the proposed west location so a walkway will be needed for egress from the two required exit doors of the room. The walkway is only located at the north and west sides of the building since site constraints prohibit it from circling the building. There are a few negative points regarding the proposed east location. The existing structures, equipment, property lines, electrical distribution equipment and underground conduit limit the available space for a new building. The result is a square footage of approximately 1900 square feet which is approximately 70 percent of the amount needed to satisfy the square footages in the program. Because of the reduced square footage, the east location floor plan does not include a break room. For this same reason, the offices and work areas are smaller than the amounts listed in the program and thus, the plan does not

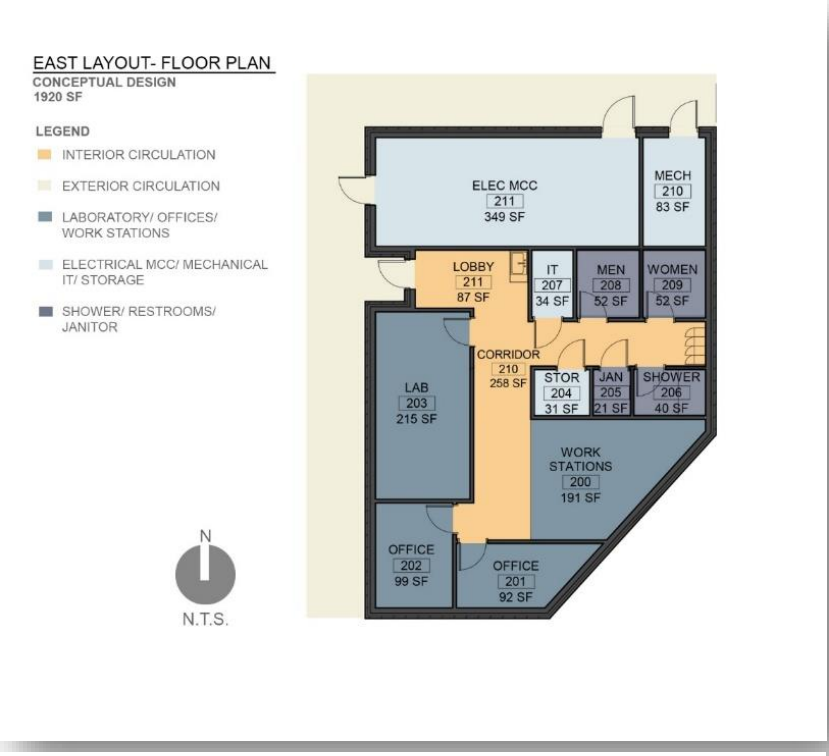

Figure 30: East Option Floor Plan

K:\HOU_Utilities\067812102_West U WWTP Improvements\04_Design\07_Design Report\202206 Final PERprescribed. Other negative conditions include laboratory and office windows facing the west sun and the problems associated with the afternoon sun heat and glare. The direct connection between the lab and the aeration basin catwalk is not possible here. The building is further south than the basin catwalk and the existing drive to the compressors building interrupts an opportunity for a direct route between the two.

SECTION 10 PROPOSED PROJECTS

This section provides recommendations for the project(s), phasing of projects, continuity of operation for the WWTP, and estimates of required laydown areas, staging, and equipment storage.

10.1 PROPOSED PROJECTS

This PER describes 14 projects which contribute to the WWTP Improvements.

10.1.1 ELECTRICAL POWER SERVICE IMPROVEMENTS

The Electrical Power Service Improvements project includes upgrades to the electrical utility service main disconnect to protect the existing WWTP from single point failures and increase power reliability. The project is located in the northwest corner of the site near the electrical service and transformers. The project includes installing a new pad mounted transformer, relocation of the existing generator set, temporary service for the switchover, demolition and recycling of the old power service equipment, and structural supports to raise the new service above the floodplain.

10.1.2 TREATMENT PROCESS OPTIMIZATION WITH FINE DIFFUSERS AND PUMPS

The Treatment Process Optimization Project includes blower equipment, piping, fine bubble diffusers, and gates to convert the plant from Contact Stabilization mode to Complete Mix Activated Sludge mode as described in the section on Recommended Process Operation.

10.1.3 MOTOR CONTROL CENTER AND CONTROLS

The Electrical Improvements project includes upgrades to the Motor Control Center and demolition of various power control panels located in and around the current administration building.

10.1.4 DISINFECTION IMPROVEMENTS

The Chlorine Conversion and Dechlorination Improvements Project includes replace the existing dechlorination system and building, and converting the existing chlorine gas disinfection system to liquid bleach. The dechlorination system needs to be replaced to fix existing components which

are leaking. The conversion to liquid chlorine system is a lower risk alternative to chlorine gas system.

10.1.5 REPLACE SCREW PUMPS WITH SUBMERSIBLE PUMPS

The submersible lift station project includes removing the existing screw pumps that lift influent into the WWTP headworks. A wet well will be constructed, and submersible pumps will be installed to replace the screw pumps. Submersible pumps are more energy efficient than the current screw pumps which operate continuously. Also, submersible pumps are less susceptible to flooding cutting down on operational cost and increasing the WWTP's resiliency to flooding events. The new lift station will include a force main to the new headworks (mechanical step screen and grit chamber).

10.1.6 MECHANICAL STEP SCREEN

The mechanical step screen project includes installation of a mechanical step screen in a new structure for the headworks. This will include relocating the bar screen to act as an emergency bypass screen during maintenance of the proposed screen, and sluice gates to allow operation to direct flow as necessary. The mechanical step screen will remove a higher amount of solids that have a negative impact to the biological processes in the plant. These solids include floatables which are difficult to remove as well as heavier solids that would settle in the basins.

10.1.7 GRIT CHAMBER

The grit chamber project includes installation of grit removal chamber at the proposed headworks structure channel where the existing screw pumps discharge. The grit chamber will remove inert solid material that interferes with the biological process of the plant and settles out in the basins that needs to be periodically removed at a cost to the WWTP operations.

10.1.8 CONSOLIDATED OPERATIONS AND MAINTENANCE MANUAL

The consolidated operations and maintenance manual project includes development of a single WWTP operation and maintenance manual to provide guidelines for plant maintenance schedule and operational guidelines. Helps ensure longevity of equipment and creates action plan during disruptive plant events.

10.1.9 CONTROL BUILDING

The Control Building Project includes construction of a new elevated building on the west side of the site. The existing control building had flooded during Hurricane Harvey. The new building would provide continuity of operation for the laboratory and facility critical infrastructure during future emergency events.

10.1.10 SITE WORK

Site improvements will include concrete paving, grading, drainage improvements, and fence improvements. The new site plan will improve site access and provide a safe area for vehicles to enter from North Braeswood Boulevard. The new alignment will also allow for a safe distance to pull off of North Braeswood and secure the west side of the site to allow for future improvements and site access.

10.1.11 WWTP STRUCTURAL IMPROVEMENTS

This PER included a structural evaluation of the plant, including buildings and concrete treatment units. There are signs of wear on several areas of the plant. The structural analysis was performed to ensure there are no safety or structural concerns that need to be addressed immediately. This project includes following the recommendations from this PER for structural repairs.

10.1.12 CONVERT THICKENER TO DIGESTER

The digester conversion project includes removing the internal components of the existing gravity sludge thickener and convert to a pre-digester basin. Scope includes installing air line piping from the blower header to the proposed digester location, installing fine bubble diffusers, decant line and sludge transfer lines to serve the digester. Sludge coming from existing gravity thickener is a lower concentration than anticipated. Modifications will allow for greater operator flexibility.

10.1.13 SECURITY CAMERAS

The WWTP Security Camera project will install additional security cameras for plant security. The cameras will be viewable from the adminstration system in the control building. Additional cameras will help ensure public safety and deter unauthorized people from entering the WWTP.

10.1.14 NON-POTABLE WATER SYSTEM IMPROVEMENTS

The Non-potable water (NPW) system project will replace the existing NPW System with new pumps and intake screen. The existing NPW system utilizes multiple pumps to supply water to components vital to plant operation. New system will simplify system and eliminate potential point of failure.

10.2 PROPOSED HYDRAULIC PROFILE

Figure 31 shows the proposed hydraulic profile, which is also provided at a larger scale in Appendix J. The major changes to the hydraulic profile include the new lift station and headworks, and the accommodation of possible tertiary filters. The proposed hydraulic grade line will remain the same as existing through the aeration basins, clarifiers, and the chlorine contact basins.

Figure 31: Proposed Hydraulic Profile

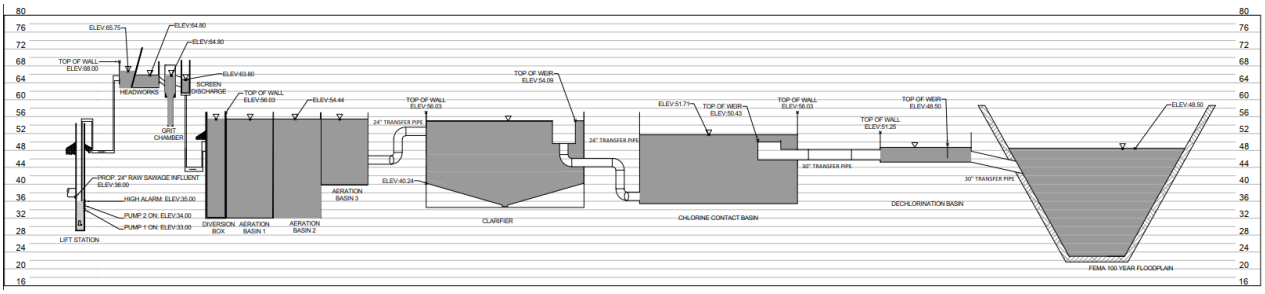

10.3 OPINIONS OF PROBABLE CONSTRUCTION COST

Table 18 provides the updated opinion of probable construction cost (OPCC) for the projects described in this PER. Appendix K includes detailed OPCC sheets for each proposed project.

Table 18: Summary of Opinions of Probable Construction Cost

Project ID	Project Description	PER OPCC
P001	Electrical Power Service Improvements	$640,000
P002	Treatment Process Optimization with Fine Diffusers and Pumps	$3,116,000
P003	Motor Control Center and Controls	$1,201,000
P006	Disinfection Improvements	$405,000
P007	Replace Screw Pumps with Submersible Pumps	$1,532,000
P008	Mechanical Step Screen	$648,000
P009	Grit Chamber	$916,000
P010	Consolidated Operations and Maintenance Manual	$57,000
P011	Control Building	$2,843,000
P012	Site Work	$379,000
P013	WWTP Structural Improvements	$136,000
P014	Convert Thickener to Digester	$337,000
P015	Security Cameras	$39,000
P016	Non-potable Water System	$236,000
	Total	**$12,485,000**

Project OPCCs in Table 18 are based on construction occurring in 2023. Assume annual escalation of 4% for each additional year for construction cost. If construction occurs in 2024, the total OPCC increases to $12,992,000, for construction in 2025 the OPCC would be $13,511,680. The project OPCCs in this PER do not include probable costs for the reclaimed water system (including the filtration system, storage tank, pump systems, transmission pipeline, meters, and control valve).

Opinions of probable costs (OPCCs) in Table 18 do not include engineering or architectural design fees. The Engineer has no control over the cost of labor, materials, equipment, or over the Contractor's methods of determining prices or over competitive bidding or market conditions. OPCCs provided herein are based on the information known to Engineer at this time and represent only the Engineer's judgment as a design professional familiar with the construction industry. The Engineer cannot and does not guarantee that proposals, bids, or actual construction costs will not vary from its opinions of probable costs.

10.4 PROJECT SEQUENCING

This section describes a sequencing plan for maintaining current operations and treatment capacity of the existing WWTP while constructing the proposed equipment and facilities. Appendix L includes a detailed project sequencing plan for both the west building and east

building options. The plan is designed to keep the existing WWTP in operation by building projects in sequence that allows operation of portions of the WWTP.

The generalized sequence of construction for the west building option is as follows:

1. Perform WWTP Structural Improvements (P013)
2. Begin Site Work: Drainage and Detention Improvements (P012)
3. Install Security Cameras (P015)
4. Construct West Control Building (P011)
5. Construct new Motor Control Center (MCC) and bring power to the MCC (P001 and P003)
6. Construct Submersible Lift Station (P007) with temporary screen over east aeration
7. Test and commission the new lift station (P007)
8. Demolish existing screw pumps (P007)
9. Construct Headworks (Mechanical Step Screen P008 and Grit Chamber P009)
10. Take west train offline (P002)
11. Construct Blowers (P002)
12. Construct Fine Bubble Diffusers in west train (P002)
13. Test and commission the west blowers and diffusers (P002)
14. Construct Fine Bubble Diffusers in east train (P002)
15. Test and commission the east blowers and diffusers (P002)
16. Convert Thickener to Digester (P014)
17. Construct Chlorine Conversion and Dechlorination Improvements (P006)
18. Complete Site Work: Paving (P012)
19. Provide Consolidated O&M Manual (P010)
20. Complete the non-potable water system upgrades (P016)

10.5 PROJECT SCHEDULE

This section describes a general schedule for the project. Figure 32 shows the proposed project schedule. The design and permitting phase begins in February 2022 and runs through December 2022. The bid phase begins in December 2022 and continues through February 2022. The construction period begins in February 2022 and continues through March 2024.

Figure 32: Proposed Project Schedule

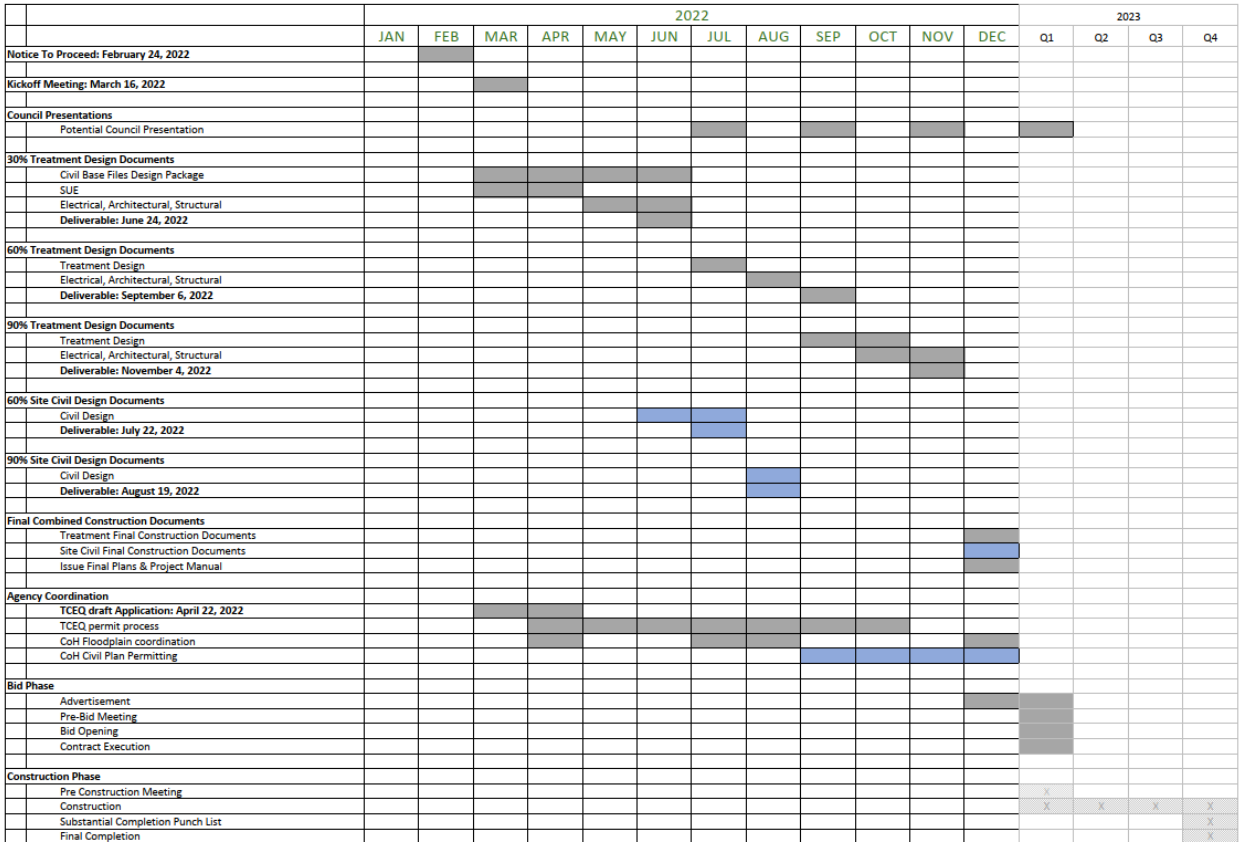

Appendix A: Selected Record Drawings

WEST UNIVERSITY PLACE

HARRIS, COUNTY
TEXAS

PLANS FOR CONSTRUCTION
OF

2 MGD SEWAGE TREATMENT PLANT
C-48-1403-03

West University Place
Harris County, Texas
Plans for Construction of 2 MGD Sewage
Treatment Plant, C-48-1403-03
Bayshore Engineers, Inc
Consulting Engineers
P.O. Box 627
Deer Park, Texas
File No. 31-01-78
1 Print Set of Mylar (40 Sheets)
17 Sheets Recorded

MAYOR
RUFUS F. STANLEY, JR.

COMMISSIONERS
MARLA FORRISTALL
PHILIP LEWIS
JOE POLICHINO
JERRY JACKSON

CITY MANAGER
RICHARD ROCKENBAUGH

CITY SECRETARY
MRS. LEE LOCKARD

DIRECTOR OF PUBLIC WORKS
A.L. BEARDEN (ACTING)

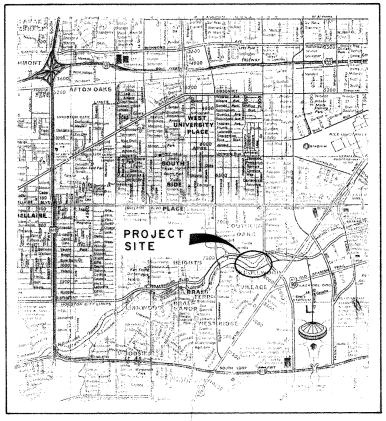

VICINITY MAP

INDEX OF DRAWINGS

SHEET NO.	TITLE
1.	Cover Sheet & Location Plan
2.	Plot Plan
3.	Process Flow Schematic
4.	Hydraulic Profile
5.	Yard Piping I
6.	Yard Piping II
7.	Lift Station Plan & Elevation
8.	Lift Station Wet Well Mechanical
9.	Lift Station Head Works Mechanical
10.	Lift Station Plan & Sections Structural
11.	Aeration Basins Mechanical - North Plan
12.	Aeration Basins Mechanical - South Plan
13.	Aeration Basins Section & Details Mechanical
14.	Aeration & Clarifier Basins Sections & Details
15.	Aeration & Clarifier Basins Plan & Sections Structural
16.	Aeration & Clarifier Basins Sections & Details Structural
17.	Compressor Station & Effluent Flume
18.	Chlorination Facilities Elevations
19.	Chlorination Facilities Details
20.	Office & Laboratory Building Elevations
21.	Office & Laboratory Building Details
22.	Sludge Dewatering Facility Elevations
23.	Sludge Dewatering Facility Plan & Details
24.	Sludge Dewatering Facility Sections
25.	Sludge Dewatering Facility Structural
26.	Sludge Holding Tank & Transfer Pumps
27.	Miscellaneous Details
28.	Electrical Yard Plan I
29.	Electrical Yard Plan II
30.	Electrical One Line Diagram
31.	Conduit & Cable Schedule
32.	Sludge Transfer Pumps - ASP Panel Electrical
33.	Electrical Details I
34.	Electrical Details II
35.	Lift Station Electrical
36.	Chlorination Facilities Electrical
37.	Office & Laboratory Electrical
38.	Sludge Dewatering Facility Plan - Electrical
39.	Sludge Dewatering Facility Sections - Electrical
40.	Control Schematic Diagram - Electrical

DATE
SEPTEMBER, 1980

BEI
BAYSHORE ENGINEERS, INC.
CONSULTING ENGINEERS
P.O. BOX 627
DEER PARK, TEXAS

FILE NO. 31-01-78

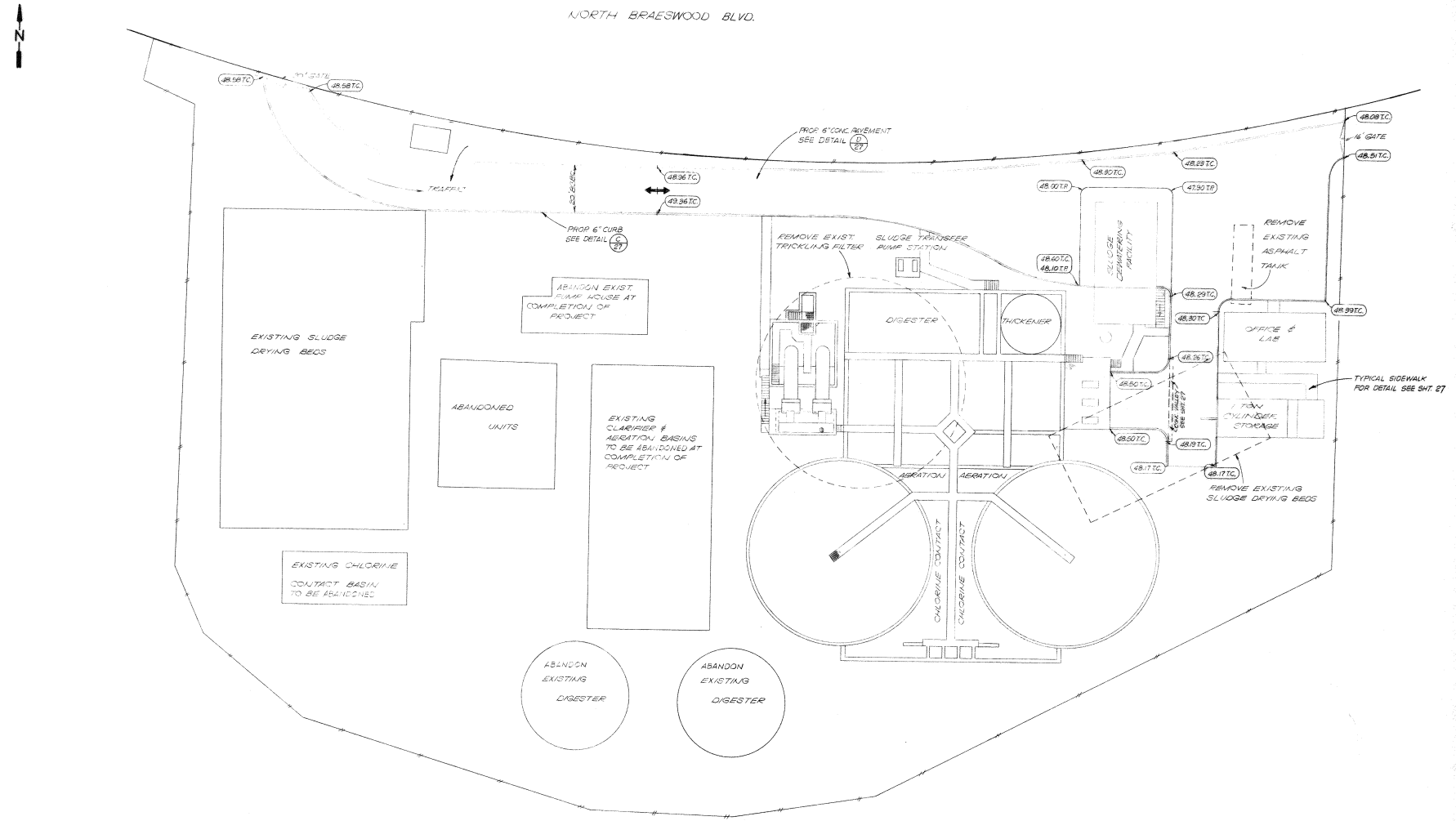

No.	Revision	Date	No.	Revision	Date

BEI

BAYSHORE ENGINEERS, INC.
CONSULTING ENGINEERS
P.O. BOX 627
DEER PARK, TEXAS 77536

Scale: 1" = 20'
Dwn. By: M.G. Date: 9/80
Chkd. By: MEC Date: 10/80

WEST UNIVERSITY PLACE
SEWAGE TREATMENT PLANT
PLOT PLAN

Project No: 31-01-78
Drawing No:
Sheet 2 of 40

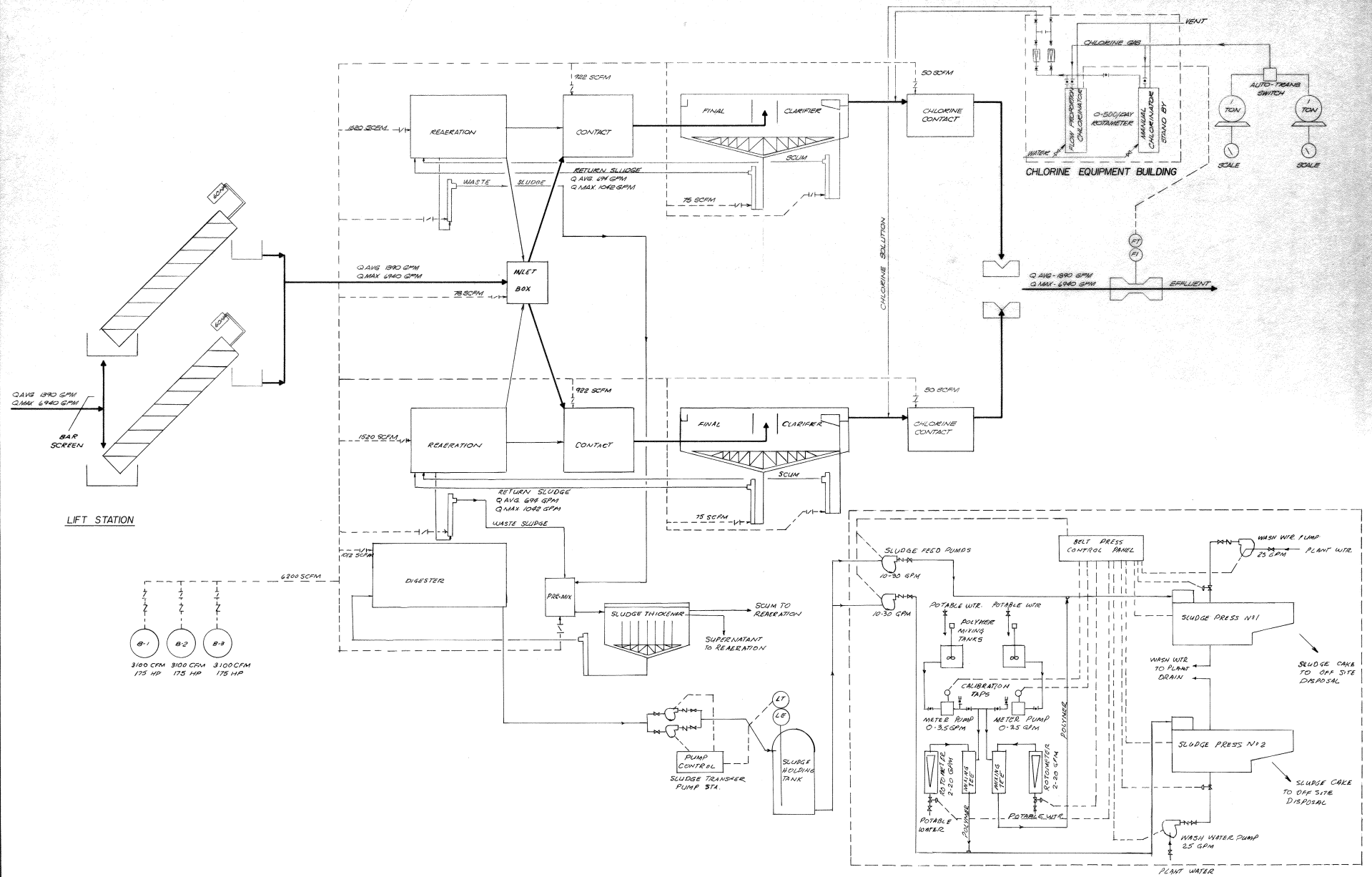

No.	Revision	Date	No.	Revision	Date

BEI

BAYSHORE ENGINEERS, INC.
CONSULTING ENGINEERS
P. O. BOX 627
DEER PARK, TEXAS 77536

Scale: NONE
Dwn. By: D O Date: 9/80
Chkd. By: MEC Date: 9/80

WEST UNIVERSITY PLACE

SEWAGE TREATMENT PLANT

PROCESS FLOW SCHEMATIC

Project No: 31-01-78
Drawing No:
Sheet 3 of 40

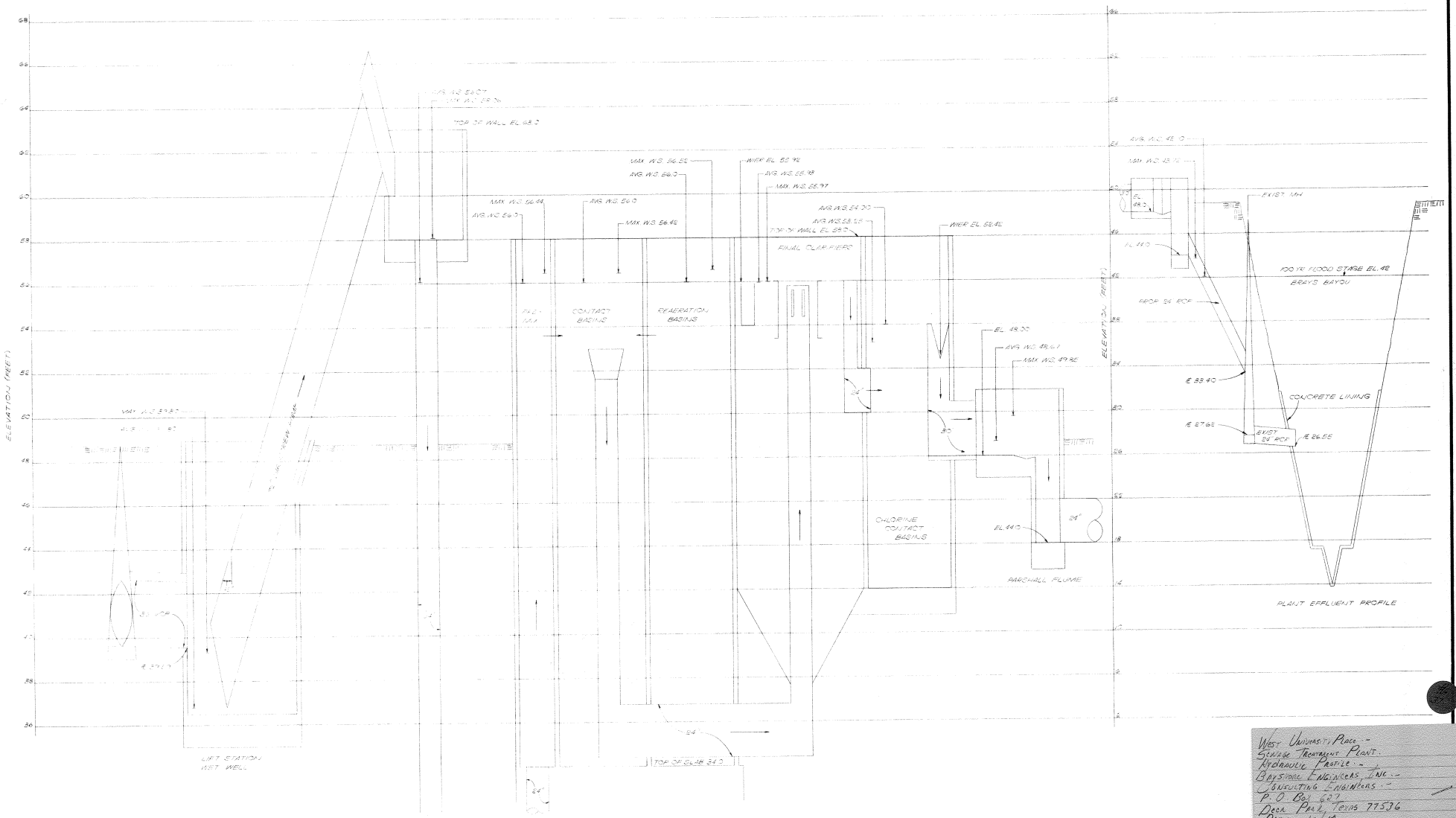

West University Place -
Sewage Treatment Plant -
Hydraulic Profile -
Bayshore Engineers, Inc. -
Consulting Engineers -
P.O. Box 627
Deer Park, Texas 77536
Date: 10/80 -

No.	Revision	Date	No.	Revision	Date

BEI

BAYSHORE ENGINEERS, INC.
CONSULTING ENGINEERS
P.O. BOX 627
DEER PARK, TEXAS 77536

Scale: AS SHOWN
Dwn. By: M.G. Date: 10/80
Chkd. By: Date:

WEST UNIVERSITY PLACE
SEWAGE TREATMENT PLANT
HYDRAULIC PROFILE

Project No: 31-01-78
Drawing No:
Sheet 4 of 40

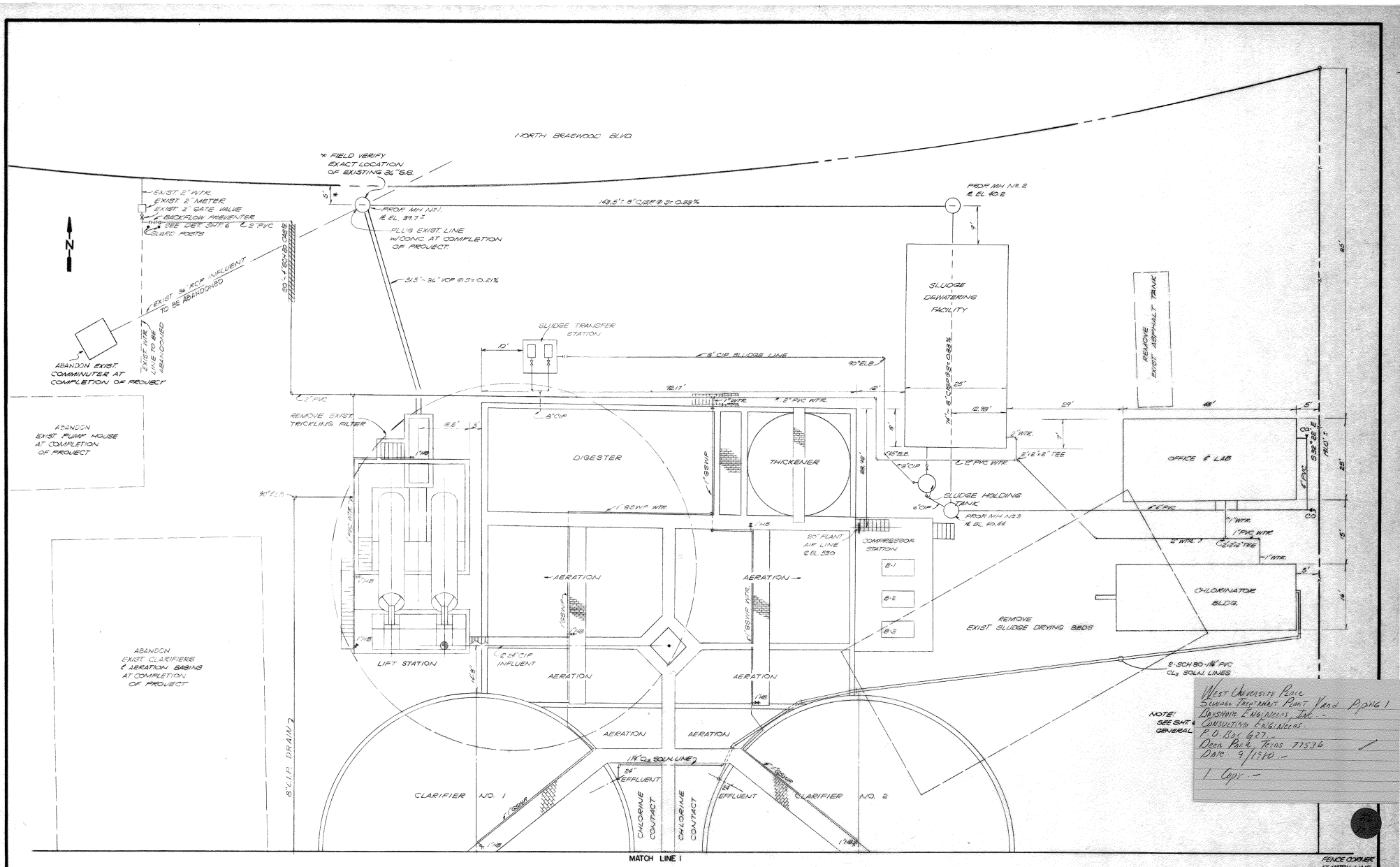

NOTE: SEE SHT. 6 GENERAL

West University Place
Sewage Treatment Plant Yard Piping I
Bayshore Engineers, Inc. -
Consulting Engineers
P.O. Box 627
Deer Park, Texas 77536
Date 9/1980
1 Copy -

No.	Revision	Date	No.	Revision	Date

BEI

BAYSHORE ENGINEERS, INC.
CONSULTING ENGINEERS
P.O. BOX 627
DEER PARK, TEXAS 77536

Scale: 1" = 10'-0"
Dwn. By: DO Date: 9/80
Chkd. By: MEC Date: 10/80

WEST UNIVERSITY PLACE
SEWAGE TREATMENT PLANT
YARD PIPING I

Project No: 31-01-78
Drawing No:
Sheet 5 of 40

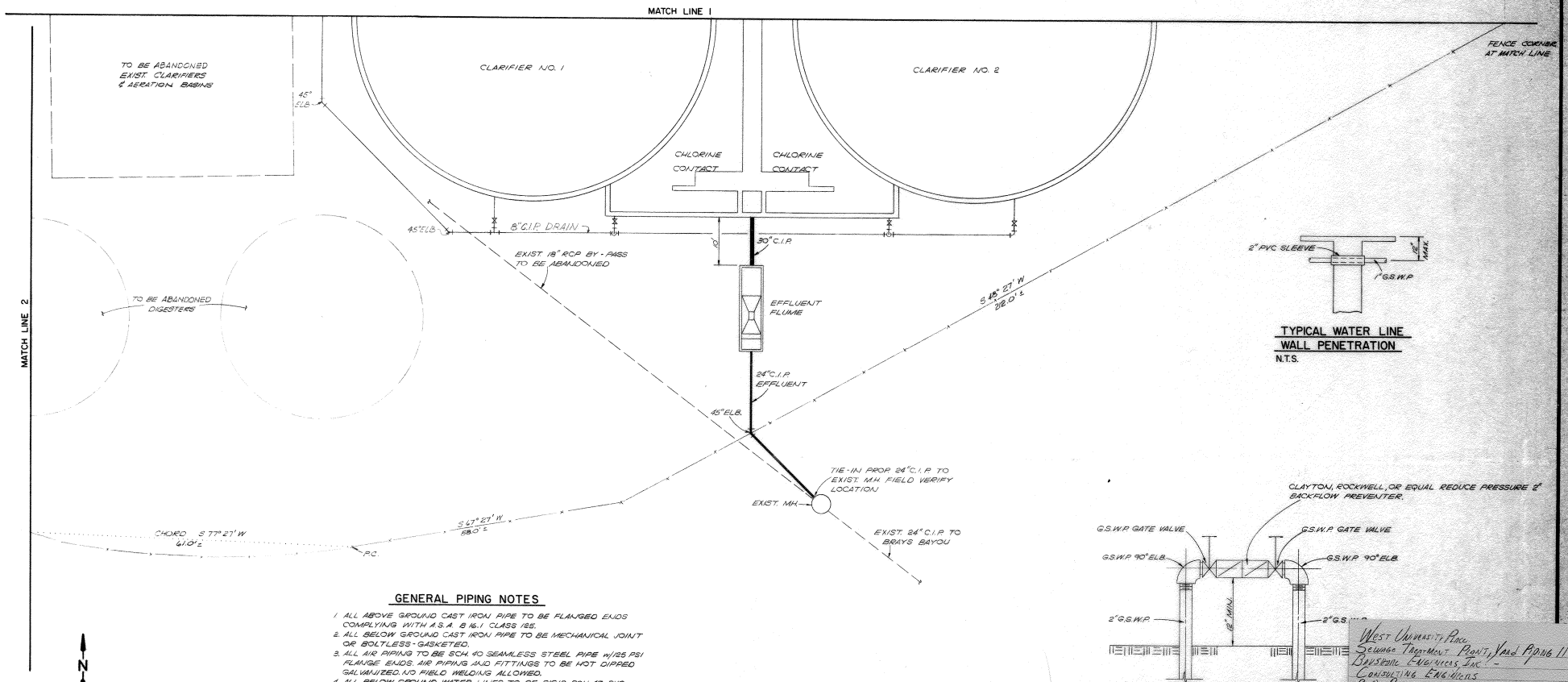

TYPICAL WATER LINE WALL PENETRATION
N.T.S.

BACKFLOW PREVENTER DETAIL
H1/2" = 1'-0"

GENERAL PIPING NOTES

1. ALL ABOVE GROUND CAST IRON PIPE TO BE FLANGED ENDS COMPLYING WITH A.S.A. B 16.1 CLASS 125.
2. ALL BELOW GROUND CAST IRON PIPE TO BE MECHANICAL JOINT OR BOLTLESS-GASKETED.
3. ALL AIR PIPING TO BE SCH. 40 SEAMLESS STEEL PIPE w/125 PSI FLANGE ENDS. AIR PIPING AND FITTINGS TO BE HOT DIPPED GALVANIZED. NO FIELD WELDING ALLOWED.
4. ALL BELOW GROUND WATER LINES TO BE RIGID SCH. 40 PVC WITH SOLVENT WELDED JOINTS. NO PVC PIPE ALLOWED ABOVE GROUND.
5. ALL ABOVE GROUND WATER LINES TO BE STANDARD WEIGHT GALVANIZED STEEL WATER PIPE WITH THREADED CONNECTIONS OR COPPER WATER PIPE WITH SWEATED SOLDER CONNECTIONS.
6. ALL SANITARY SEWER LINES 4 INCH AND SMALLER TO BE SCH. 40 RIGID PVC.
7. SANITARY SEWER 6" AND LARGER TO BE CAST IRON SOIL PIPE WITH RUBBER GASKET BELL & SPIGOT CONNECTIONS.
8. INSULATE ALL EXPOSED WATER LINES WITH ALUMINUM BACKED PIPE WRAP.

No.	Revision	Date	No.	Revision	Date

BEI

BAYSHORE ENGINEERS, INC.
CONSULTING ENGINEERS
P.O. BOX 627
DEER PARK, TEXAS 77536

Scale: 1" = 10'-0"
Dwn. By: MG DO Date: 9/80
Chkd. By: WC Date: 10/80

WEST UNIVERSITY PLACE
SEWAGE TREATMENT PLANT
YARD PIPING II

Project No: 31-01-78
Drawing No:
Sheet 6 of 40

West University Place
Sewage Treatment Plant, Yard Piping II
Bayshore Engineers, Inc. -
Consulting Engineers
P.O. Box 627
Deer Park, Texas 77536 -
Date 9/80 -
Copy -

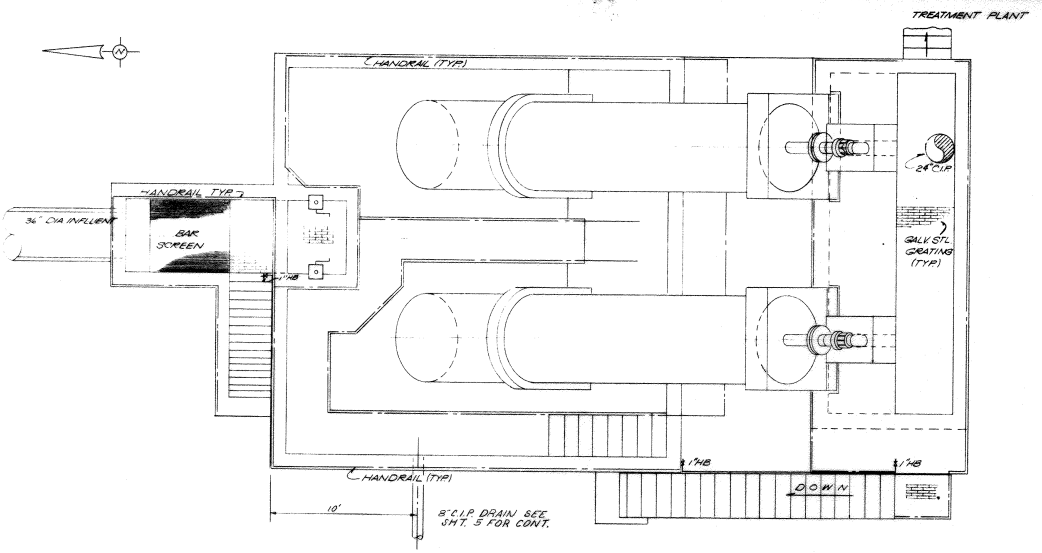

PLAN
1/4"=1'-0"

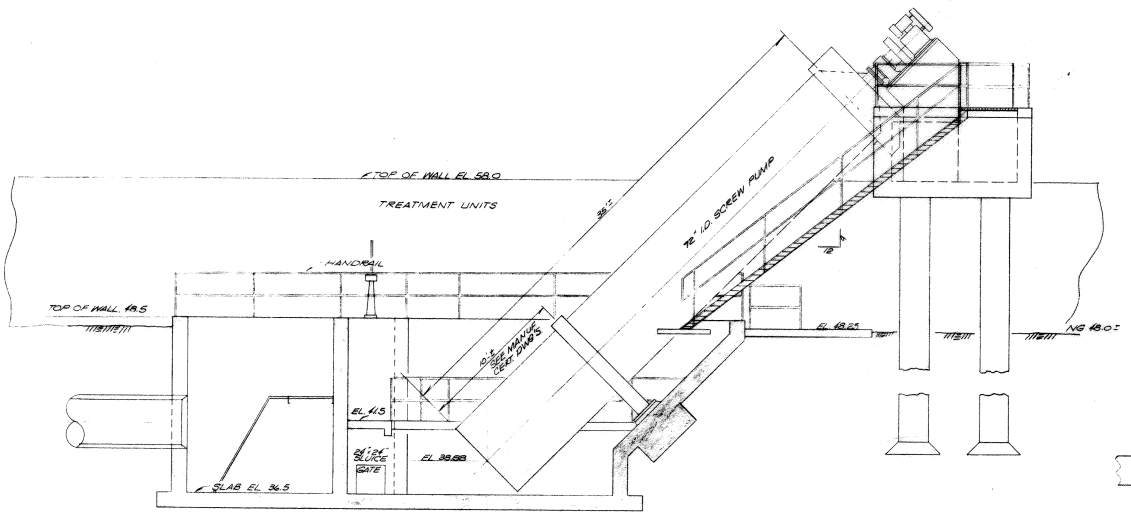

TYPICAL ELEVATION
1/4"=1'-0"

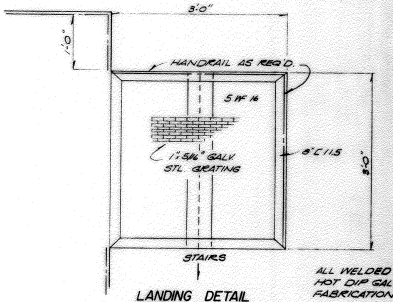

LANDING DETAIL
1"=1'-0"

ALL WELDED CONST. HOT DIP GALV. AFTER FABRICATION.

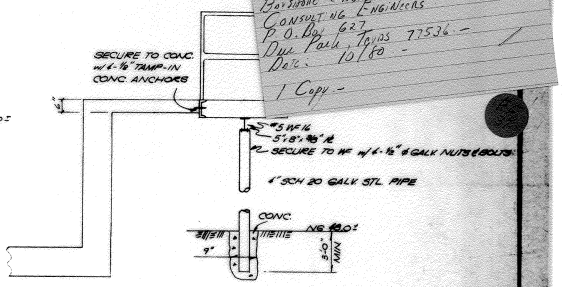

PLATFORM DETAIL
1/2"=1'-0"

West University Place
Sewage Treatment Plant
Lift Station Plan & Elevation
Bayshore Engineers, Inc
Consulting Engineers
P.O. Box 627
Deer Park, Texas 77536
Date: 10/80
1 Copy

No.	Revision	Date	No.	Revision	Date

BEI

BAYSHORE ENGINEERS, INC.
CONSULTING ENGINEERS
P. O. BOX 627
DEER PARK, TEXAS 77536

Scale: NOTED
Dwn. By: D.O. Date: 10/80
Chkd. By: Date:

WEST UNIVERSITY PLACE
SEWAGE TREATMENT PLANT
LIFT STATION PLAN & ELEVATION

Project No: 31-01-79
Drawing No:
Sheet 7 of 40

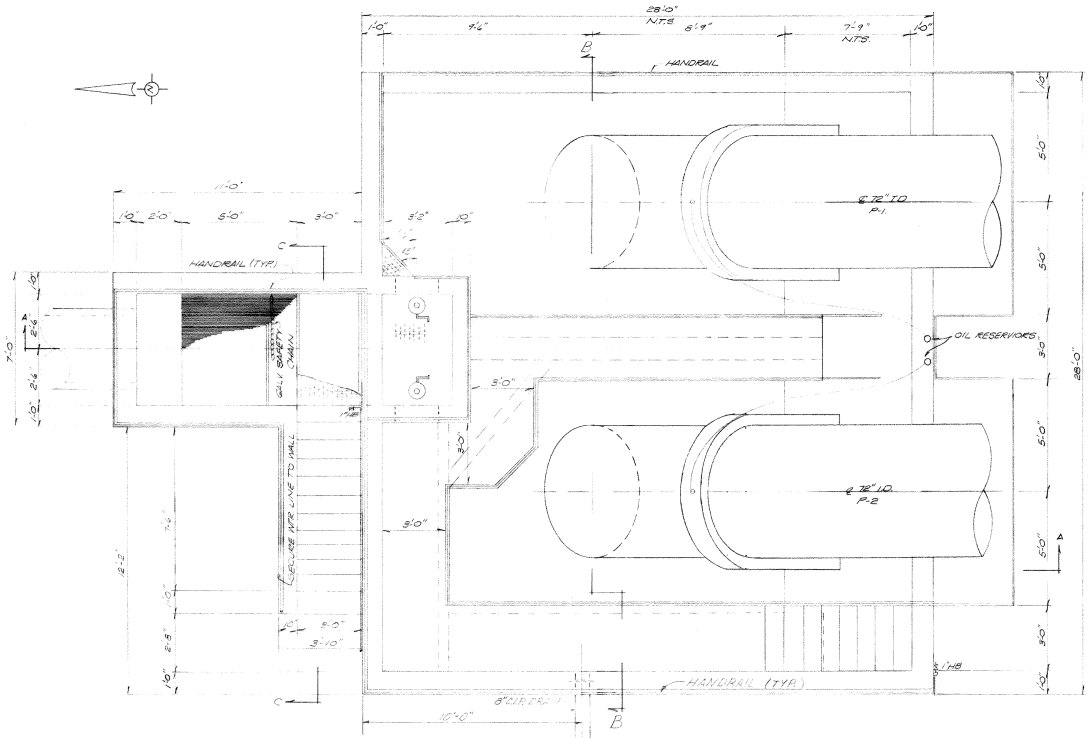

WET WELL PLAN
SCALE: 3/8"=1'-0"

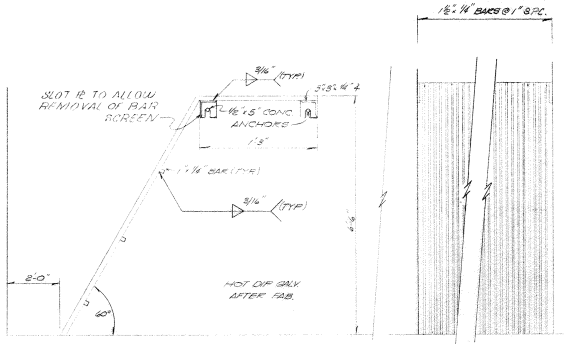

BAR SCREEN DETAILS
N.T.S.

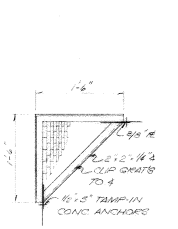

DETAIL 1
N.T.S.

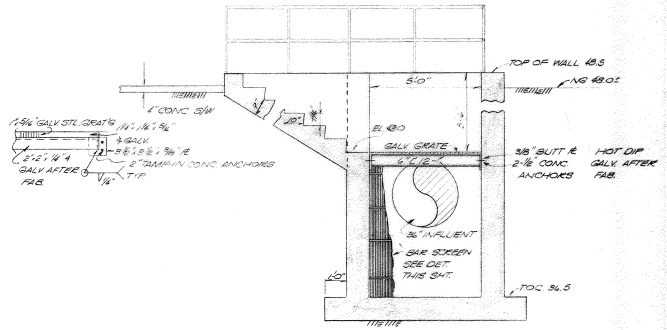

SECTION C-C
SCALE: 3/8"=1'-0"

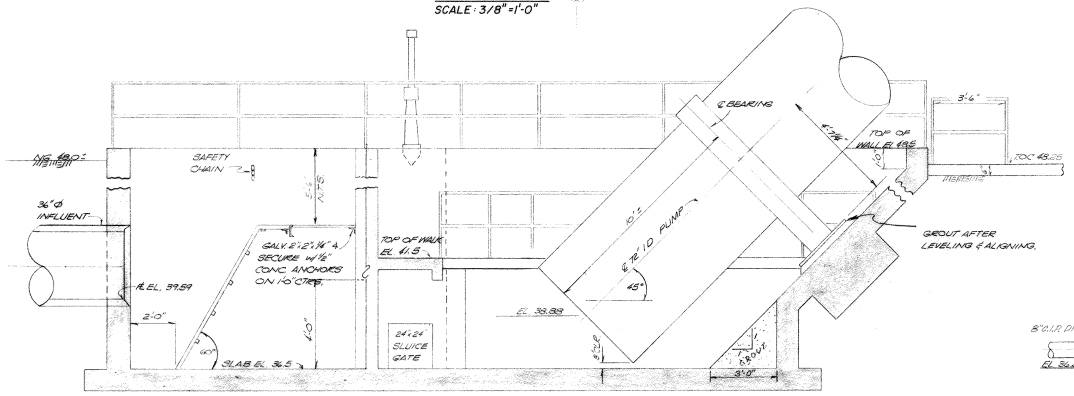

SECTION A-A
SCALE: 3/8"=1'-0"

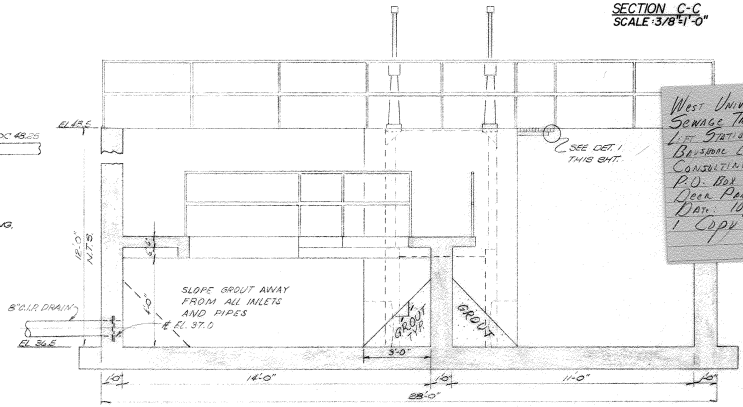

SECTION B-B
SCALE: 3/8"=1'-0"

West University Place
Sewage Treatment Plant
Lift Station Wet Well Mechanical
Bayshore Engineers, Inc.
Consulting Engineers
P.O. Box 627
Deer Park, Texas 77536
Date: 10/80
1 Copy

No.	Revision	Date	No.	Revision	Date

BEI

BAYSHORE ENGINEERS, INC.
CONSULTING ENGINEERS
P. O. BOX 627
DEER PARK, TEXAS 77536

Scale: NOTED
Dwn. By: D.O. Date: 10/80
Chkd. By: MEC Date: 10/80

WEST UNIVERSITY PLACE
SEWAGE TREATMENT PLANT
LIFT STATION WET WELL
MECHANICAL

Project No: 31-01-78
Drawing No:
Sheet 8 of 40

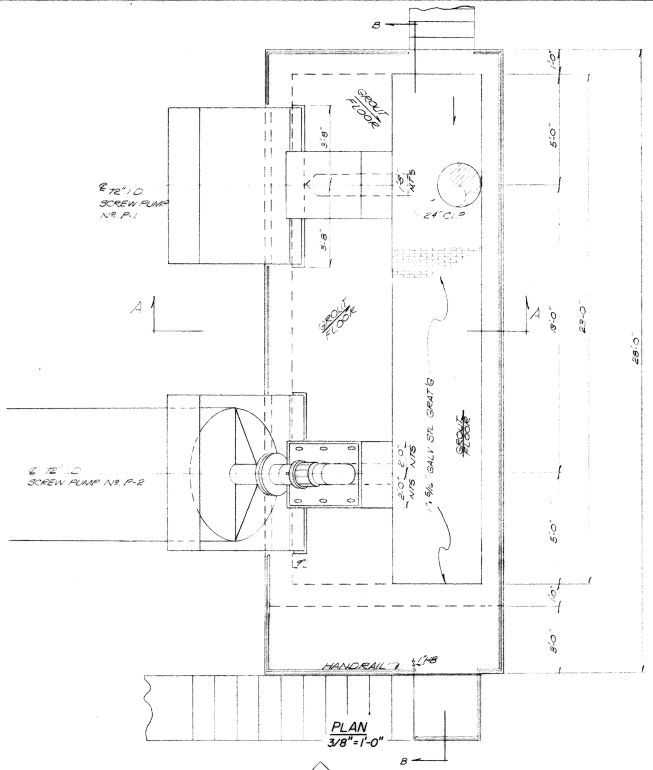

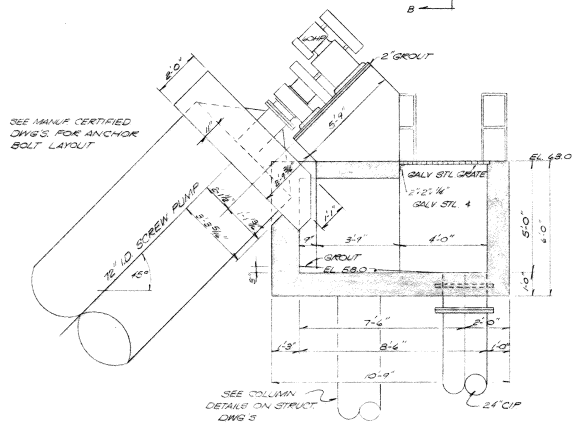

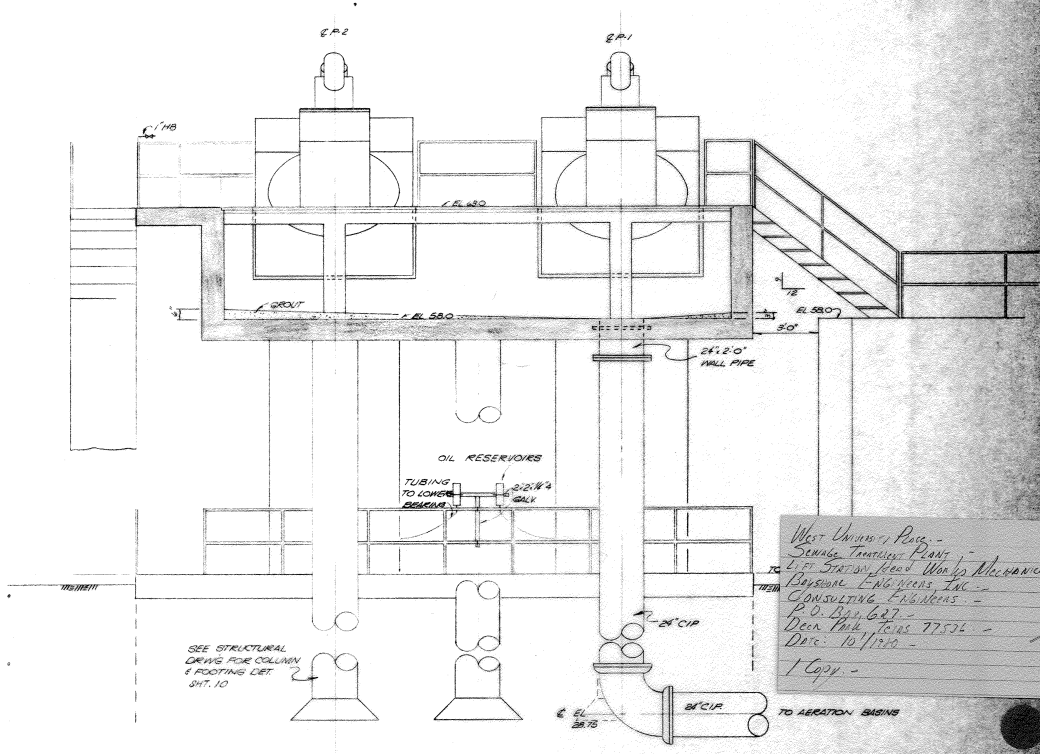

West University Place -
Sewage Treatment Plant -
Lift Station Head Works Mechanical -
Bayshore Engineers, Inc. -
Consulting Engineers -
P.O. Box 627
Deer Park, Texas 77536 -
Date: 10/1/80 -
1 Copy -

No.	Revision	Date	No.	Revision	Date

BEI

BAYSHORE ENGINEERS, INC.
CONSULTING ENGINEERS
P.O. BOX 627
DEER PARK, TEXAS 77536

Scale: NOTED
Dwn. By: DO Date: 10-80
Chkd. By: [illegible] Date: 10/80

WEST UNIVERSITY PLACE
SEWAGE TREATMENT PLANT
LIFT STATION HEAD WORKS
MECHANICAL

Project No: 31-01-79
Drawing No: [illegible]
Sheet [illegible] of 40

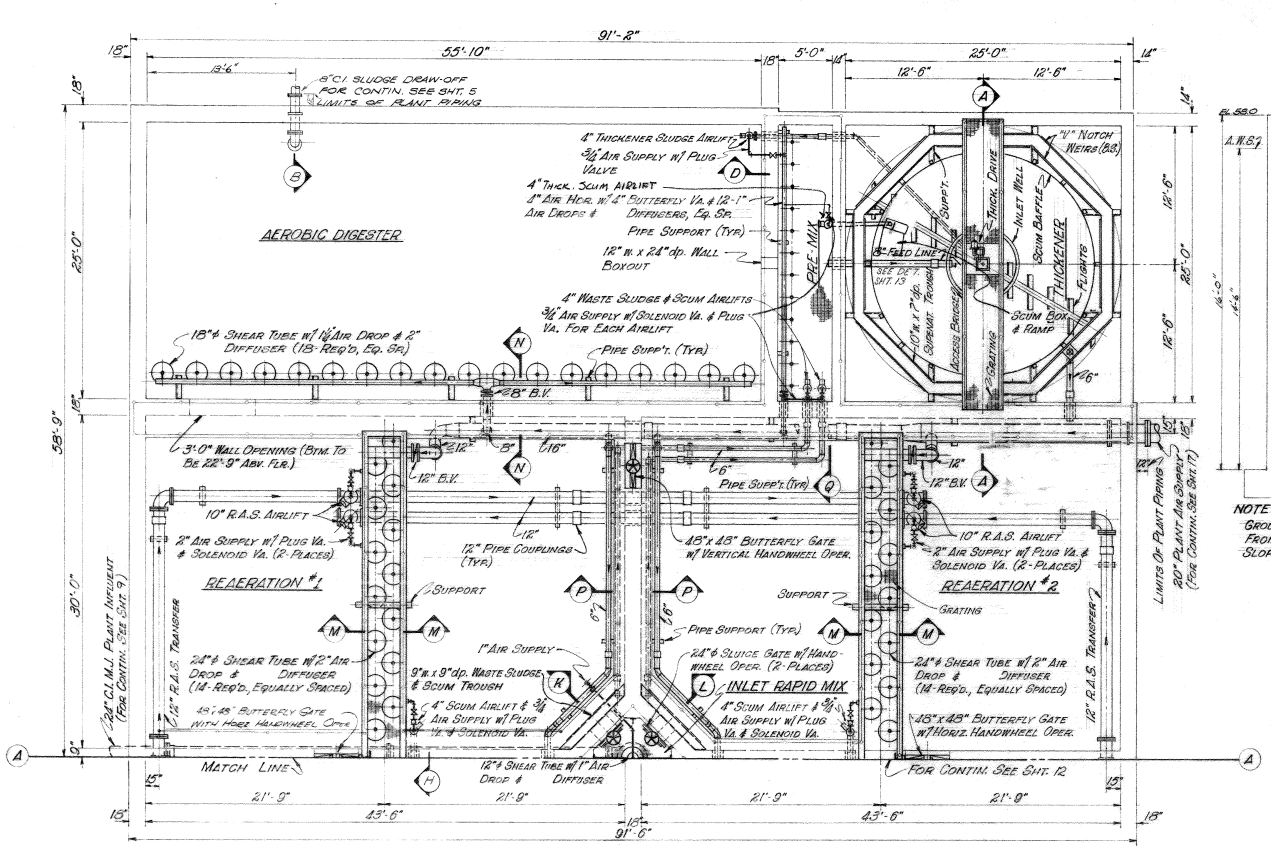

PLAN
SCALE: 3/16" = 1'-0"

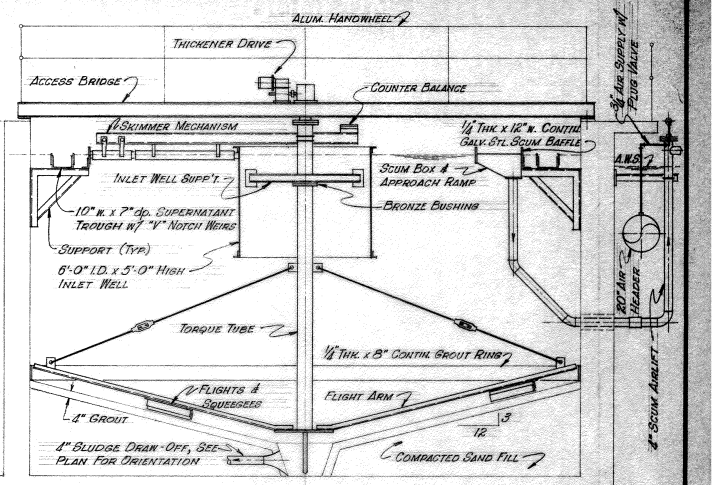

NOTE:
GROUT ALL CORNERS IN THICKENER FROM GROUT RING UP TO WALL W/ SLOPE OF 60° MIN.

SECTION A-A
SCALE: 3/8" = 1'-0"

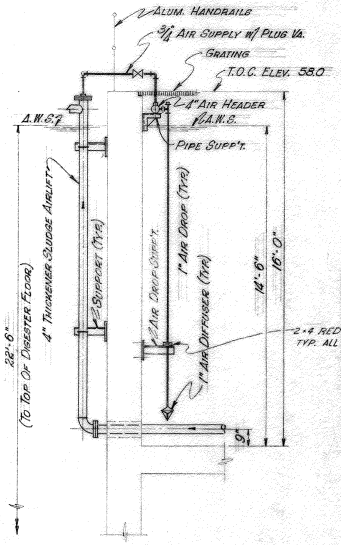

NOTE: 1" G.S.W.P. HAS BEEN DELETED FOR CLARITY. SEE SHT. 5 FOR WATER LINE ROUTING & HOSE BIBB LOCATIONS.

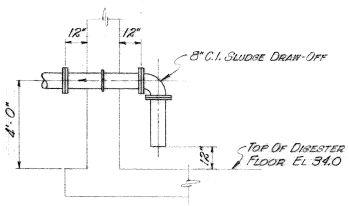

SECTION B-B
SCALE: 3/8" = 1'-0"

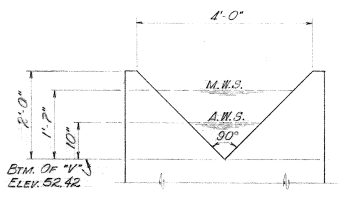

PLANT EFFLUENT WEIR DETAIL
SCALE: 3/4" = 1'-0"

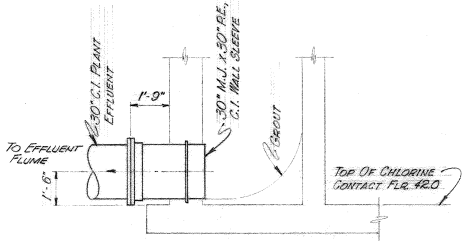

SECTION C-C
SCALE: 3/8" = 1'-0"

SECTION D-D
SCALE: 3/8" = 1'-0"

West University Place
Sewage Treatment Plant North Plan
Aeration Basins-Mechanical
Bayshore Engineers, Inc -
Consulting Engineers -
P.O. Box 627
Deer Park, Texas 77536
Date: 9/25/1990 -
1 Copy -

No.	Revision	Date	No.	Revision	Date

BEI

BAYSHORE ENGINEERS, INC.
CONSULTING ENGINEERS
P.O. BOX 627
DEER PARK, TEXAS 77536

Scale: As Noted
Dwn. By: H.D.W. Date: 9-25-90
Chkd. By: [illegible] Date: 10/90

WEST UNIVERSITY PLACE
SEWAGE TREATMENT PLANT
NORTH PLAN
AERATION BASINS - MECHANICAL

Project No: 31-01-78
Drawing No:
Sheet 11 of 40

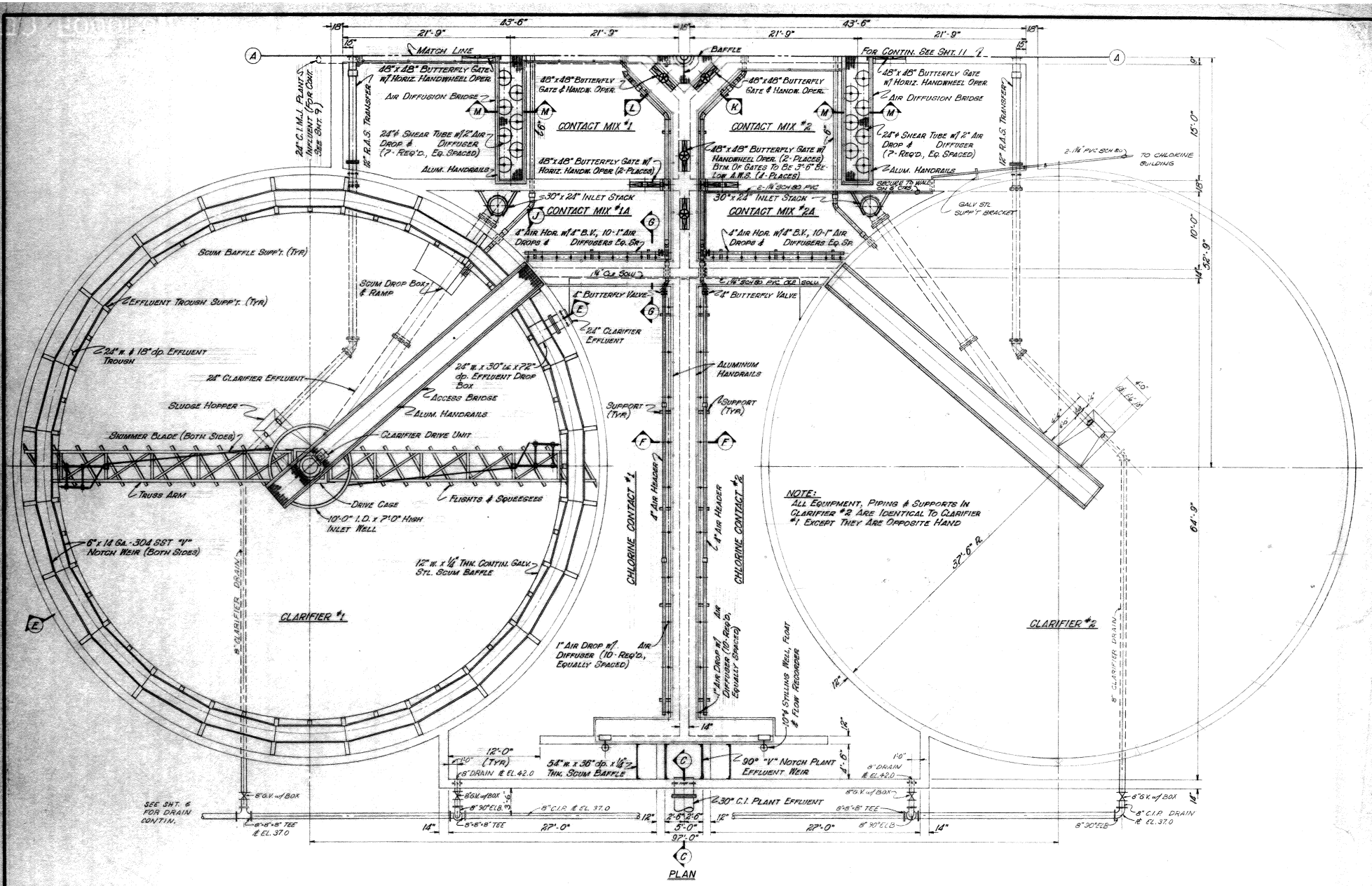

PLAN

No.	Revision	Date	No.	Revision	Date

BEI

BAYSHORE ENGINEERS, INC.
CONSULTING ENGINEERS
P.O. BOX 627
DEER PARK, TEXAS 77536

Scale: 3/16" = 1'-0"
Dwn. By: H.D.W. Date: 9-23-81
Chkd. By: [illegible] Date: 10/81

WEST UNIVERSITY PLACE
SEWAGE TREATMENT PLANT
SOUTH PLAN
AERATION BASINS - MECHANICAL

Project No: 31-01-78
Drawing No:
Sheet 12 of 40

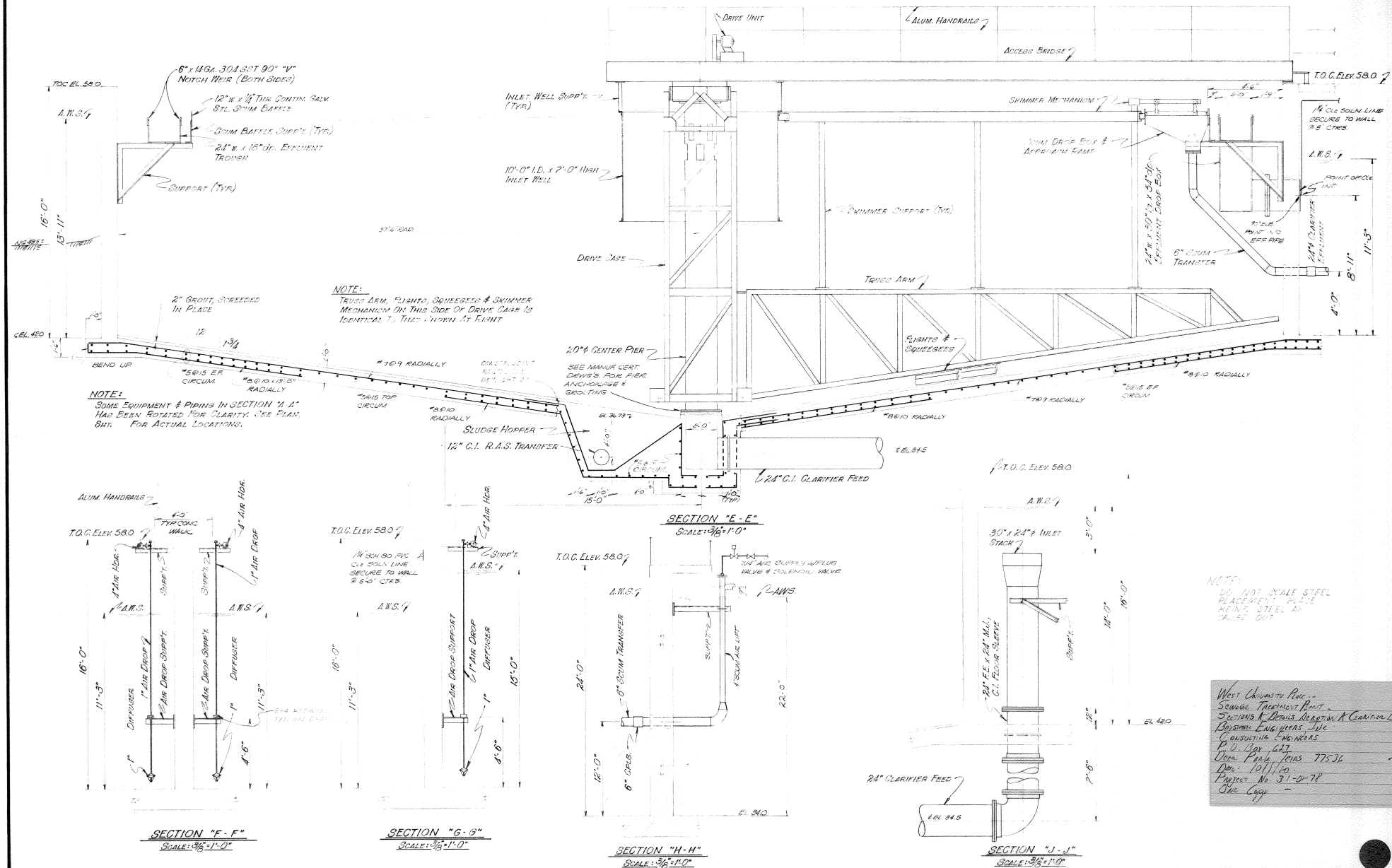

West University Place
Sewage Treatment Plant
Sections & Details Aeration & Clarifier Basins
Bayshore Engineers, Inc.
Consulting Engineers
P.O. Box 627
Deer Park, Texas 77536
Date 10/1/80
Project No. 31-01-78
Shop Copy

No.	Revision	Date	No.	Revision	Date

BEI

BAYSHORE ENGINEERS, INC.
CONSULTING ENGINEERS
P.O. BOX 627
DEER PARK, TEXAS 77536

Scale: As Noted
Dwn. By: H.D.W. Date: 10-1-80
Chkd. By: Date:

WEST UNIVERSITY PLACE
SEWAGE TREATMENT PLANT
SECTIONS & DETAILS
AERATION & CLARIFIER BASINS

Project No: 31-01-78
Drawing No:
Sheet 14 of 40

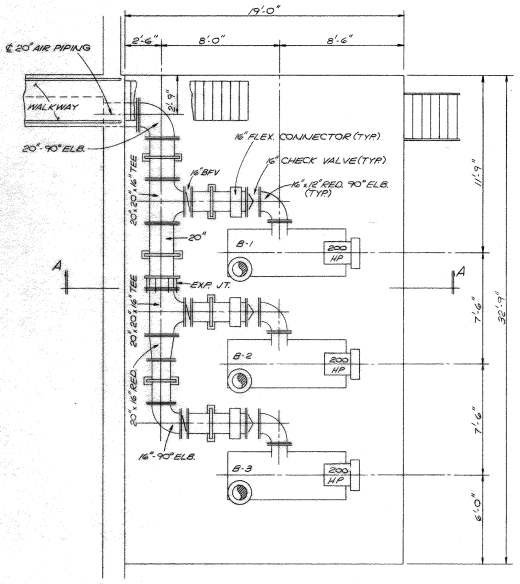

PLAN
1/4"=1'-0"

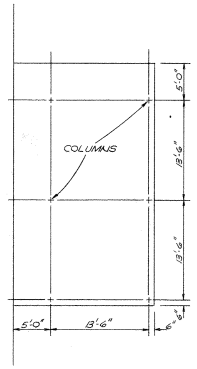

ROOF SUPPORT PLAN
1/8"=1'-0"

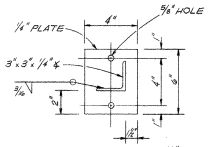

DETAIL 1
N.T.S.

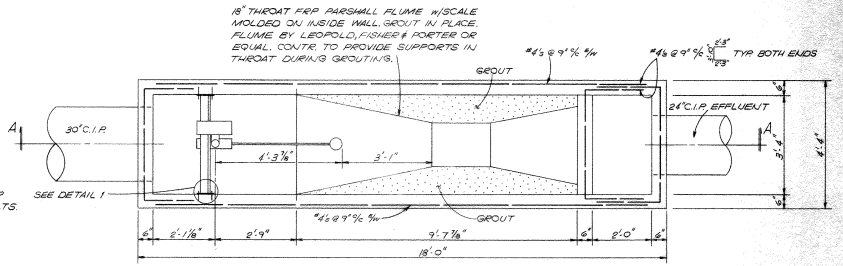

PLAN
1/2"=1'-0"

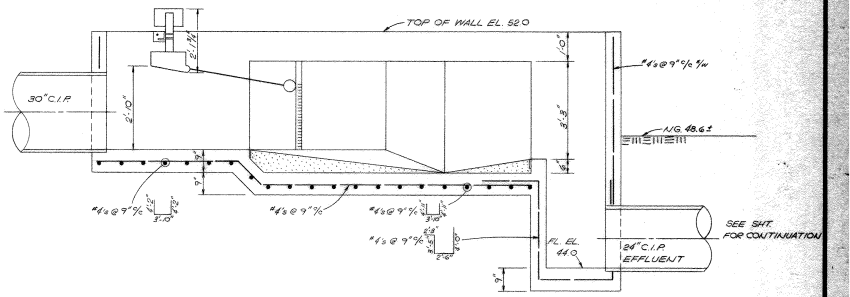

SECTION A-A
1/2"=1'-0"

EFFLUENT FLUME

NOTES

1. DIMENSIONS SHOWN FOR SPENCER COMPRESSORS. CONTRACTOR TO MODIFY PIPING & SLAB ELEVATION AT NO EXPENSE TO OWNER TO ACCOMODATE COMPRESSORS BY HOFFMAN, LAMSON, OR EQUAL.
2. ALL AIR PIPING TO BE SCH. 40 GALV. STL.

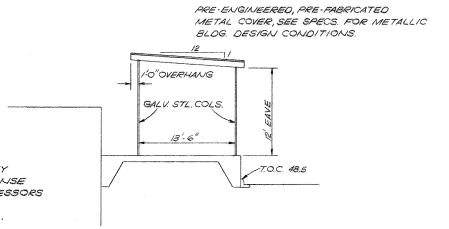

ROOF ELEVATION
1/8"=1'-0"

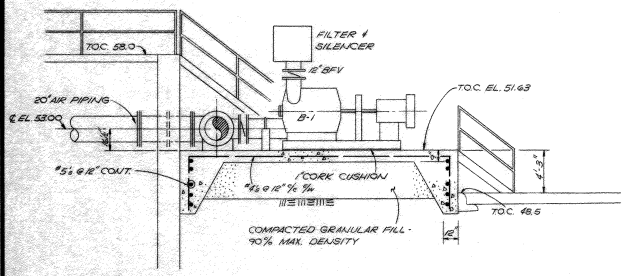

SECTION A-A
1/4"=1'-0"

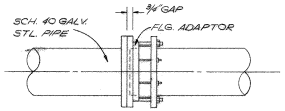

TYPICAL EXPANSION JOINT
N.T.S.

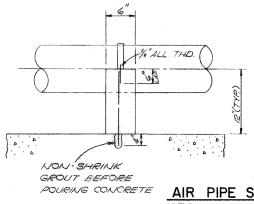

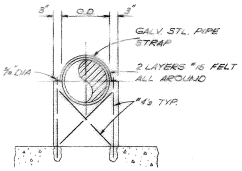

AIR PIPE SUPPORT
N.T.S.

West University Place
Sewage Treatment Plant
Compressor Station & Effluent Flume
Bayshore Engineers, Inc.
Consulting Engineers
P.O. Box 627
Deer Park, Texas 77536
Date 10/80
1 Copy

No.	Revision	Date	No.	Revision	Date

BEI

BAYSHORE ENGINEERS, INC.
CONSULTING ENGINEERS
P.O. BOX 627
DEER PARK, TEXAS 77536

Scale: AS NOTED
Dwn. By.: M.G. Date: 10/80
Chkd. By: Date: 10/80

WEST UNIVERSITY PLACE
SEWAGE TREATMENT PLANT
COMPRESSOR STATION 8
EFFLUENT FLUME

Project No: 31-01-78
Drawing No:
Sheet 17 of 40

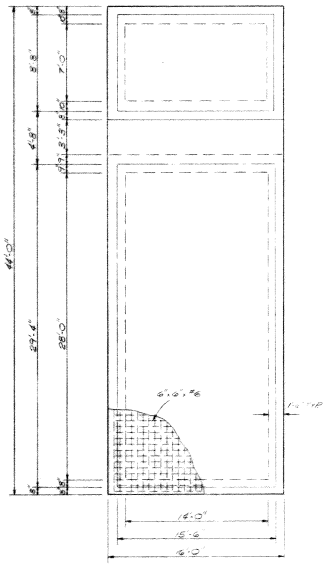

FOUNDATION PLAN
3/16"=1'-0"

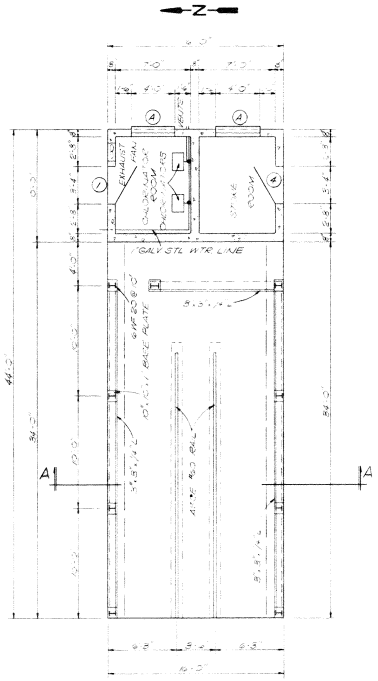

PLAN
CHLORINATOR & PUMP ROOM
3/16"=1'-0"

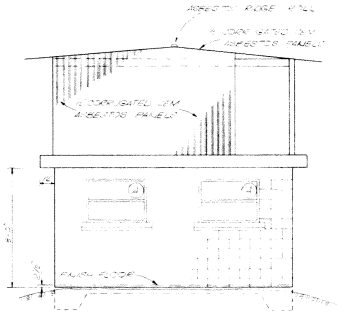

EAST ELEVATION
1/4"=1'-0"

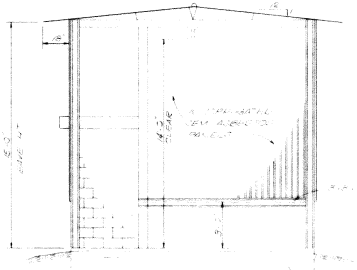

WEST ELEVATION
1/4"=1'-0"

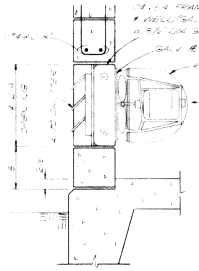

EXHAUST FAN DETAIL
N.T.S.

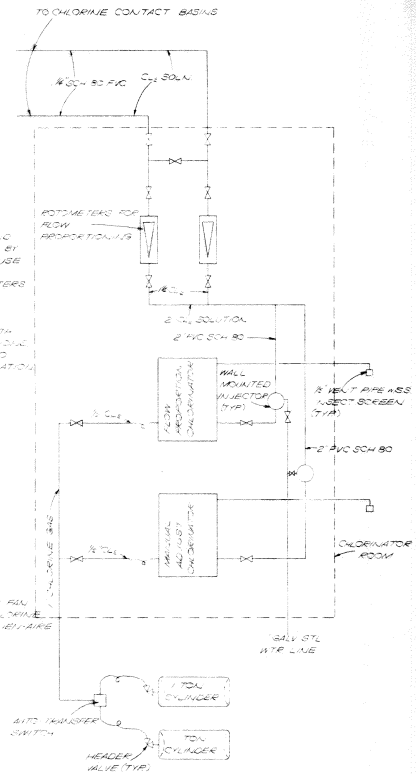

CHLORINE PIPING SCHEMATIC
N.T.S.

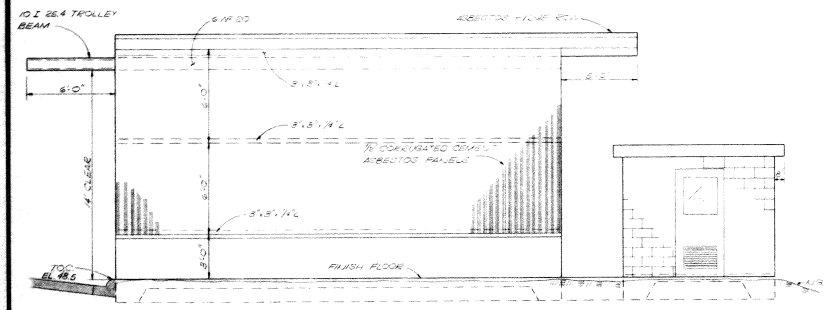

SOUTH ELEVATION
1/4"=1'-0"

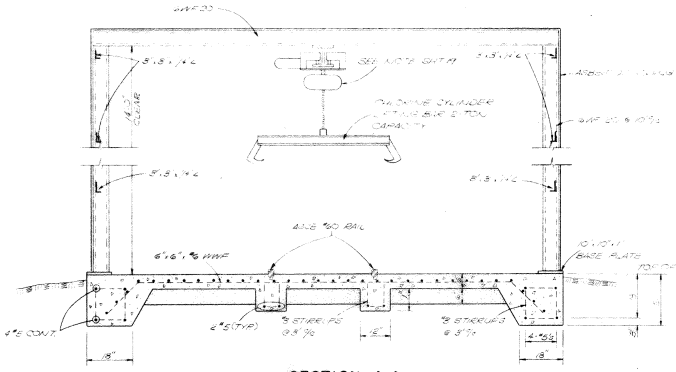

SECTION A-A
1/2"=1'-0"

West University Place -
Sewage Treatment Plant, Chlorination Fac-
ilities Elevations -
Bayshore Engineers Inc. -
Consulting Engineers -
P.O. Box 627
Deer Park, Texas 77536 -
Date: 7/80 -
1 Copy -

No.	Revision	Date	No.	Revision	Date

BEI

BAYSHORE ENGINEERS, INC.
CONSULTING ENGINEERS
P.O. BOX 627
DEER PARK, TEXAS 77536

Scale: AS NOTED
Dwn. By: M.G. Date: 7/80
Chkd. By: M.E.C. Date: 7/80

WEST UNIVERSITY PLACE
SEWAGE TREATMENT PLANT
CHLORINATION FACILITIES
ELEVATIONS

Project No: 31-01-78
Drawing No:
Sheet 18 of 40

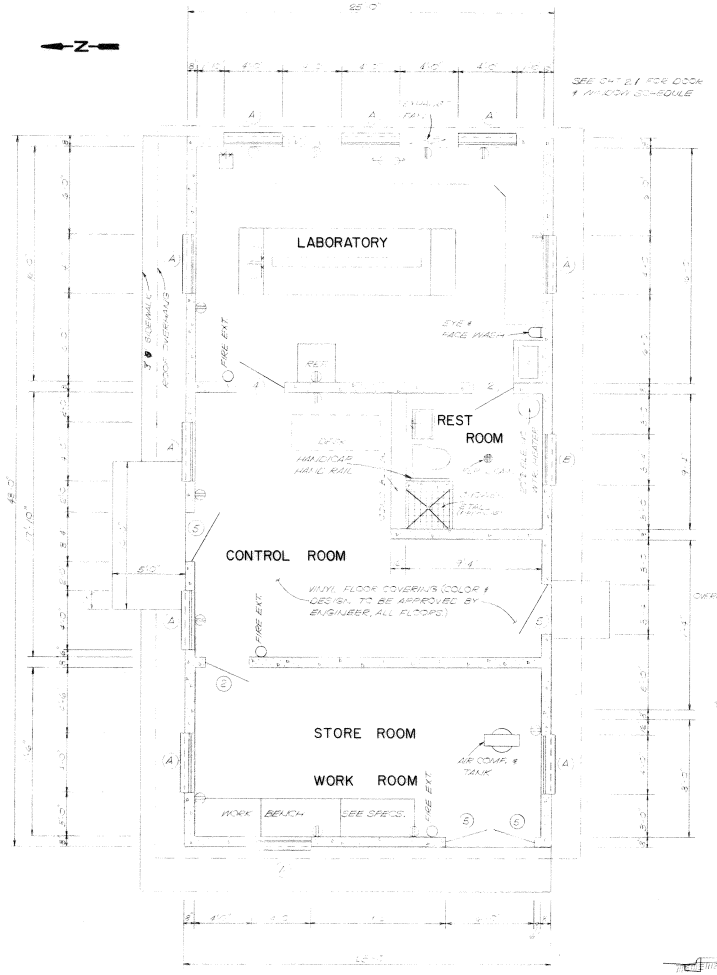

FLOOR PLAN
1/4" = 1'-0"

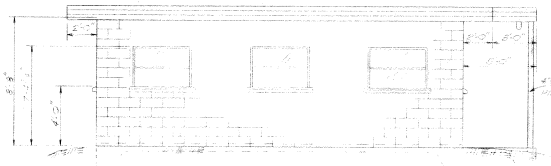

EAST ELEVATION
1/4" = 1'-0"

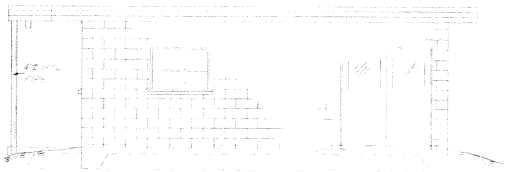

WEST ELEVATION
1/4" = 1'-0"

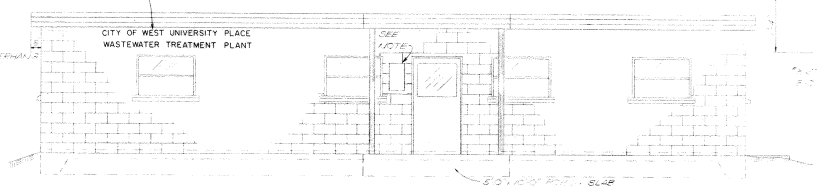

NORTH ELEVATION
1/4" = 1'-0"

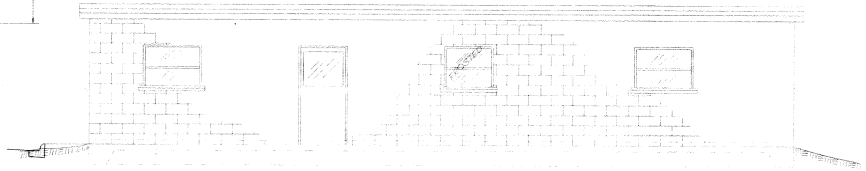

SOUTH ELEVATION
1/4" = 1'-0"

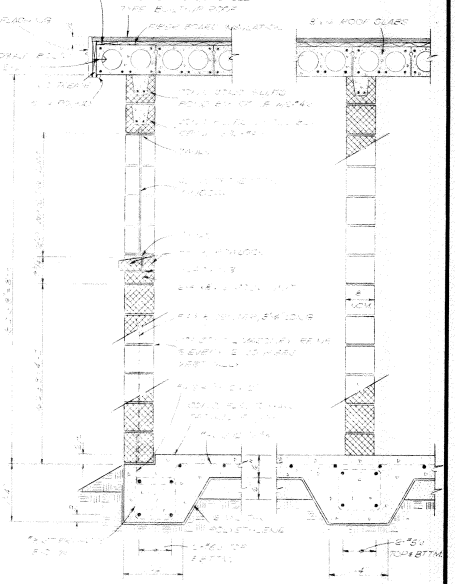

TYP. WINDOW & DOOR SECTION
3/4" = 1'-0"

TYP. SECTION INTERIOR WALL
3/4" = 1'-0"

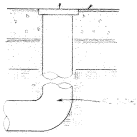

FLOOR DRAIN SECTION
N.T.S.

West University Place -
Sewage Treatment Plant
Office and Laboratory Building Elevations
Bayshore Engineers, Inc.
Consulting Engs. Mgrs.
P.O. Box 627
Deer Park, Texas 77536
Project No: 31-01-78
Date 6/80
1 Copy -

No.	Revision	Date	No.	Revision	Date

BEI

BAYSHORE ENGINEERS, INC.
CONSULTING ENGINEERS
P.O. BOX 627
DEER PARK, TEXAS 77536

Scale: AS SHOWN
Dwn. By: M.G. Date: 6/80
Chkd. By: M.E.C. Date: 7/80

WEST UNIVERSITY PLACE
SEWAGE TREATMENT PLANT
OFFICE AND LABORATORY BUILDING ELEVATIONS

Project No: 31-01-78
Drawing No.
Sheet 20 of 40

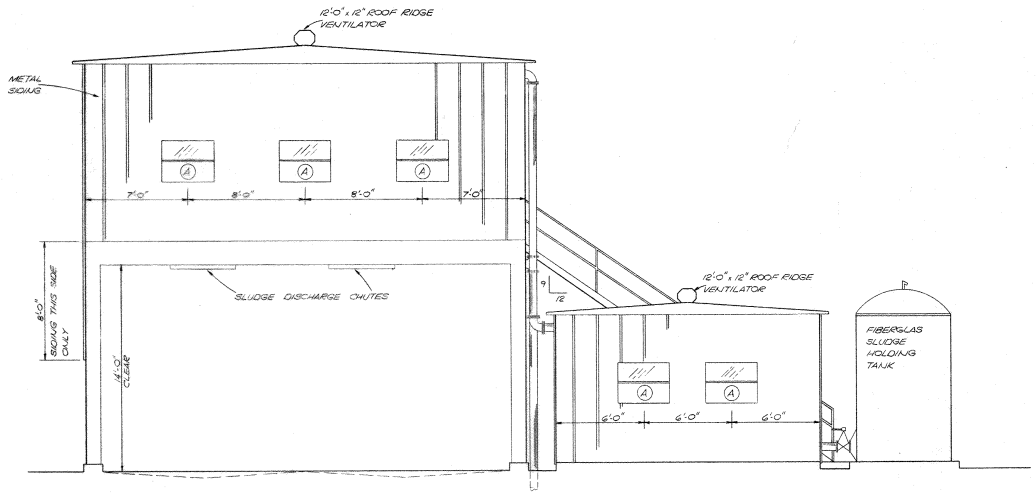

WEST ELEVATION
1/4"=1'-0"

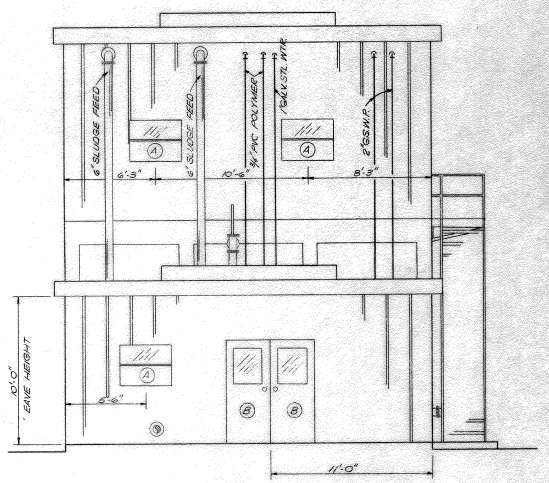

SOUTH ELEVATION
1/4"=1'-0"

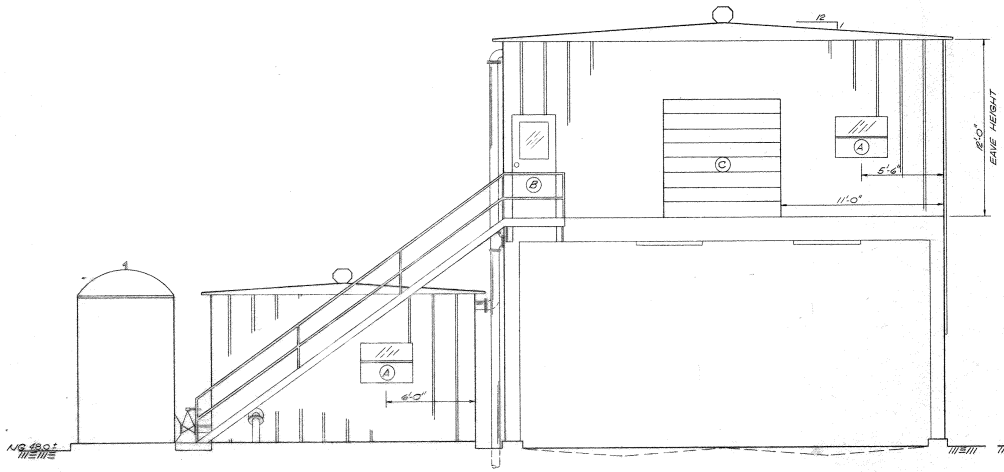

EAST ELEVATION
1/4"=1'-0"

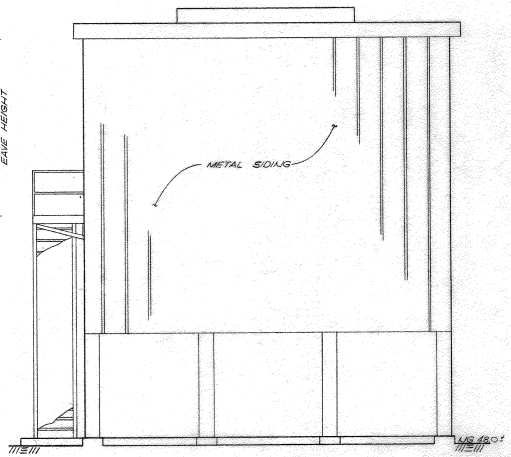

NORTH ELEVATION
1/4"=1'-0"

LEGEND

(A) DOUBLE PROJECTION - COMPLETE INDUSTRIAL GRADE WINDOWS WITH SCREENS. SIZE 2940.

(B) PRESS METAL DOORS, SIZE 3070 EA., CONSTRUCTED OF NO.18 GAGE STEEL, SET IN 5 1/2" FRAME WITH STANDARD CONTOUR. WINDOW TO BE CLEAR GLASS w/ WIRE MESH IMPREGNATED.

(C) ALUMINUM GARAGE DOOR COMPLETE WITH CHAIN OPERATED HOIST AND ROLL UP MECHANISM. SIZE 8'-0" x 8'-0". PROVIDE SAFETY CHAINS ACROSS OPENING.

West University Place -
Sewage Treatment Plant
Sludge Dewatering Facility Elevations
Bayshore Engineers, Inc
Consulting Engineers
P.O. Box 627
Deer Park, Texas 77536
Project No. 31-01-78
Date. 6/80
1 Copy -

No.	Revision	Date	No.	Revision	Date

BEI

BAYSHORE ENGINEERS, INC.
CONSULTING ENGINEERS
P. O. BOX 627
DEER PARK, TEXAS 77536

Scale: AS SHOWN
Dwn. By: M.G. Date: 6/80
Chkd. By: M.E.C. Date: 7/80

WEST UNIVERSITY PLACE
SEWAGE TREATMENT PLANT
SLUDGE DEWATERING FACILITY
ELEVATIONS

Project No: 31-01-78
Drawing No:
Sheet 22 of 40

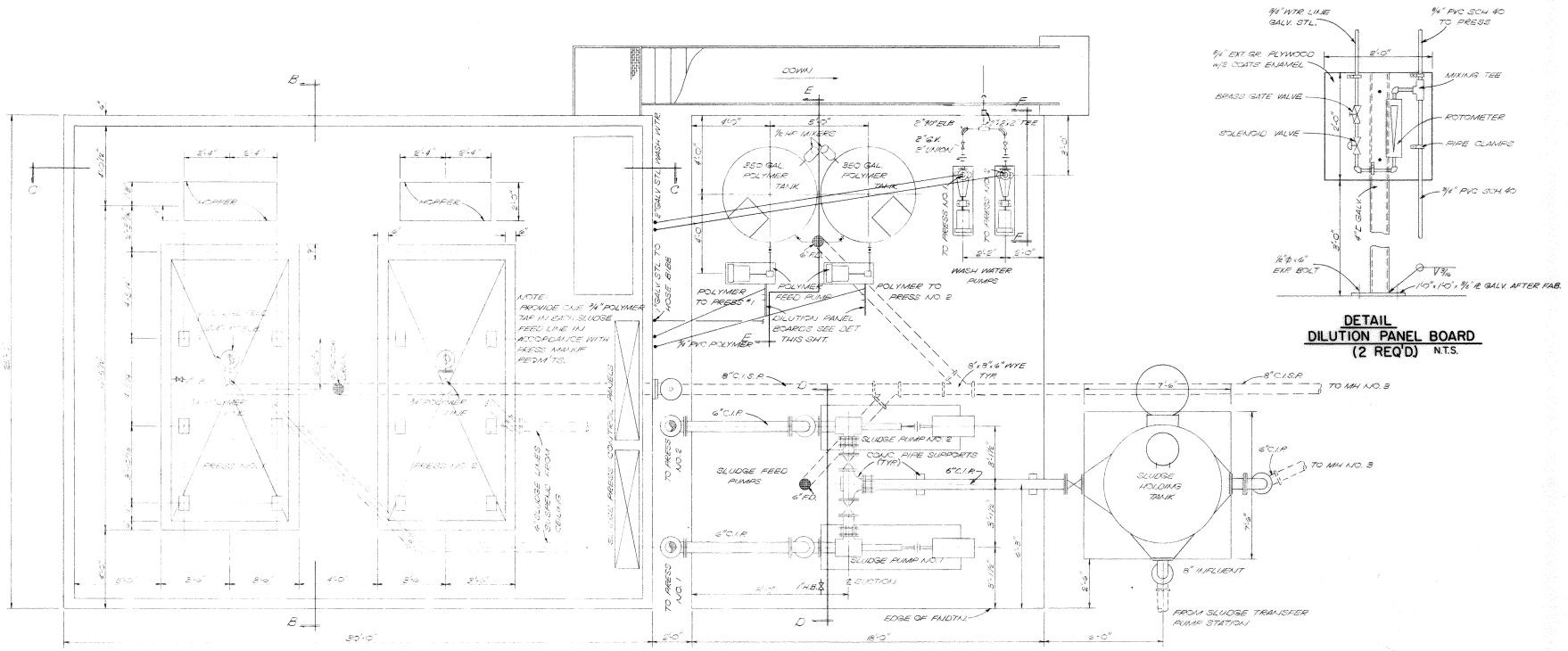

SECTION A-A
3/8"=1'-0"

DETAIL DILUTION PANEL BOARD (2 REQ'D) N.T.S.

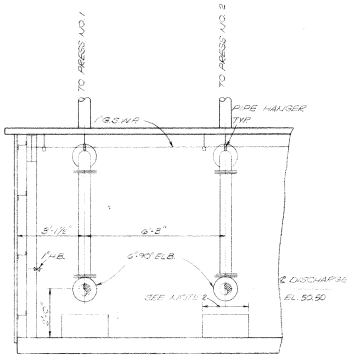

SECTION D-D
N.T.S.

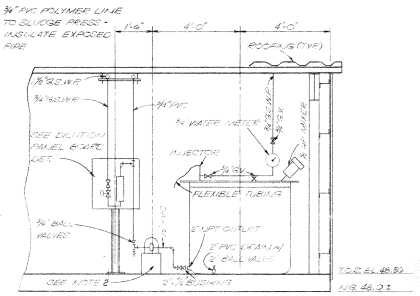

SECTION E-E
N.T.S.

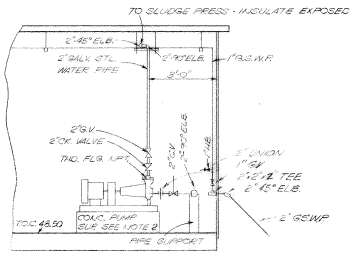

SECTION F-F
N.T.S.

NOTES:
1. ALL WINDOWS TO BE DOUBLE PROJECTION WINDOWS CONSTRUCTED W/ALUMINUM FRAMES. NOMINAL SIZE 3'-6"x3'-6" PROVIDE W/INSECT SCREENS. LOCATE BOTTOM OF WINDOWS 4'-0" FROM FLOOR.
2. PUMP PAD DIMENSIONS TO BE PUMP BASE DIMENSIONS PLUS 2". SEE MANUF. DRWGS. FOR BASE DIMENSIONS.

West University Place
Sewage Treatment Plant
Sludge Dewatering Facility, Plan & Details
Bayshore Engineers, Inc.
Consulting Engineers
P.O. Box 627
Deer Park, Texas 77536
Project No. 31-01-78
Date: 6-80
1 Copy

No.	Revision	Date	No.	Revision	Date

BEI

BAYSHORE ENGINEERS, INC.
CONSULTING ENGINEERS
P.O. BOX 627
DEER PARK, TEXAS 77536

Scale: AS SHOWN
Dwn. By: M.G. Date: 6/80
Chkd. By: M.E.C. Date: 8/80

WEST UNIVERSITY PLACE
SEWAGE TREATMENT PLANT
SLUDGE DEWATERING FACILITY
PLAN & DETAILS

Project No: 31-01-78
Drawing No:
Sheet 23 of 40

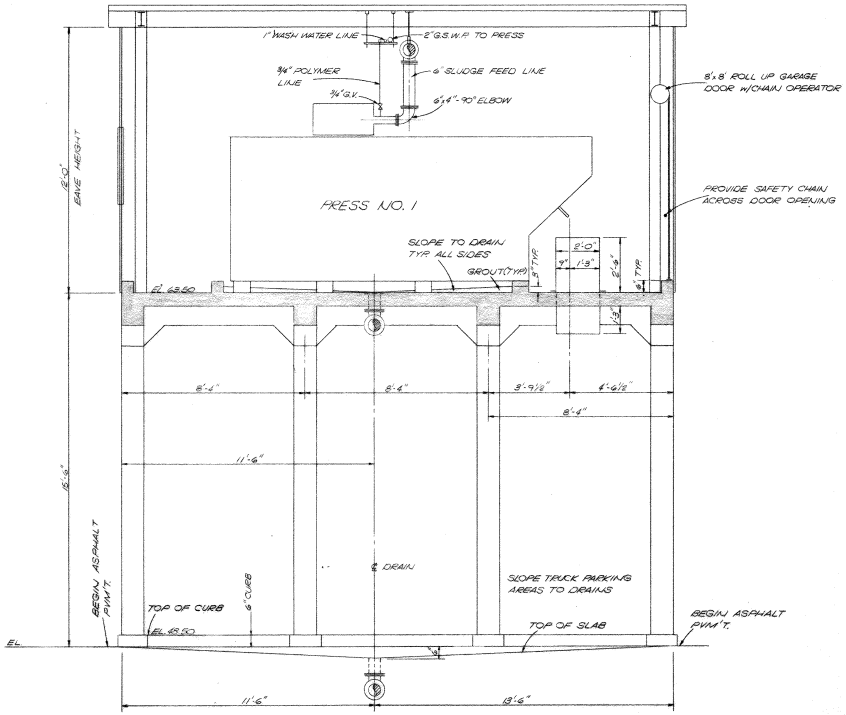

SECTION B-B
3/8"=1'-0"

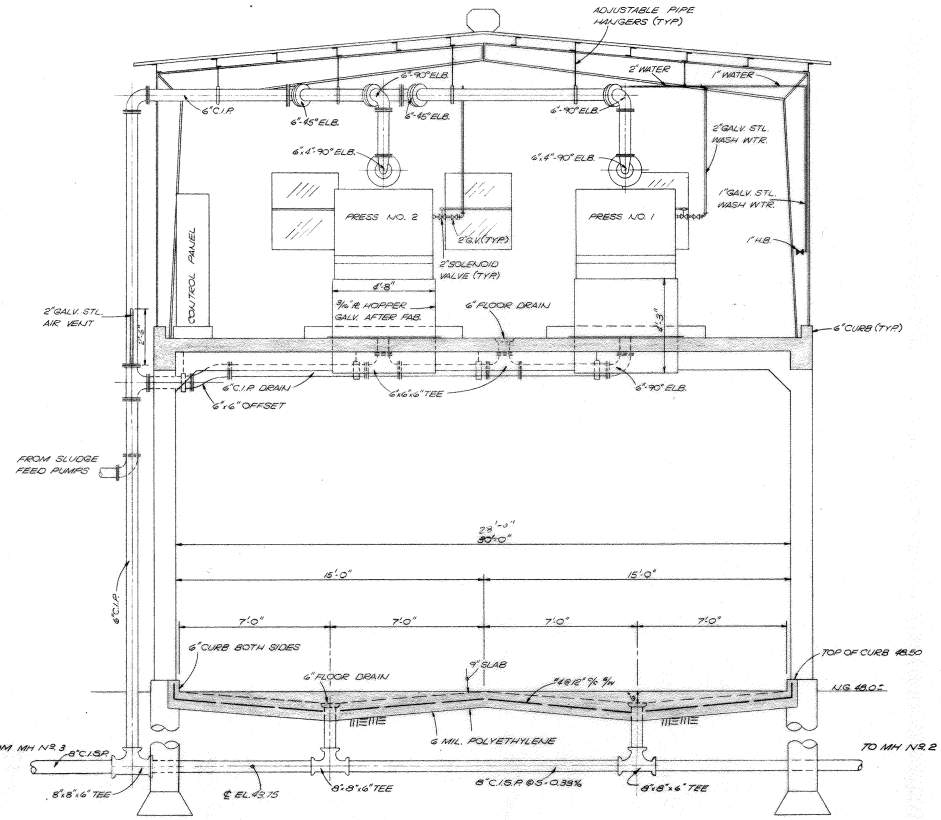

SECTION C-C
3/8"=1'-0"

West University Place –
Sewage Treatment Plant
Sludge Dewatering Facility Sections
Bayshore Engineers,
Consulting Engineers
P.O. Box 627
Deer Park, Texas 77536
Project No. 31-01-78
Date: 7/80
1 Copy –

No.	Revision	Date	No.	Revision	Date

BEI

BAYSHORE ENGINEERS, INC.
CONSULTING ENGINEERS
P.O. BOX 627
DEER PARK, TEXAS 77536

Scale: AS SHOWN
Dwn. By: M.G. Date: 7/80
Chkd. By: M.E.C. Date: 8/80

WEST UNIVERSITY PLACE
SEWAGE TREATMENT PLANT
SLUDGE DEWATERING FACILITY
SECTIONS

Project No: 31-01-78
Drawing No:
Sheet 24 of 40

City of West University Place, Texas

Belt Press Replacement
At
Wastewater Treatment Plant

May, 2011

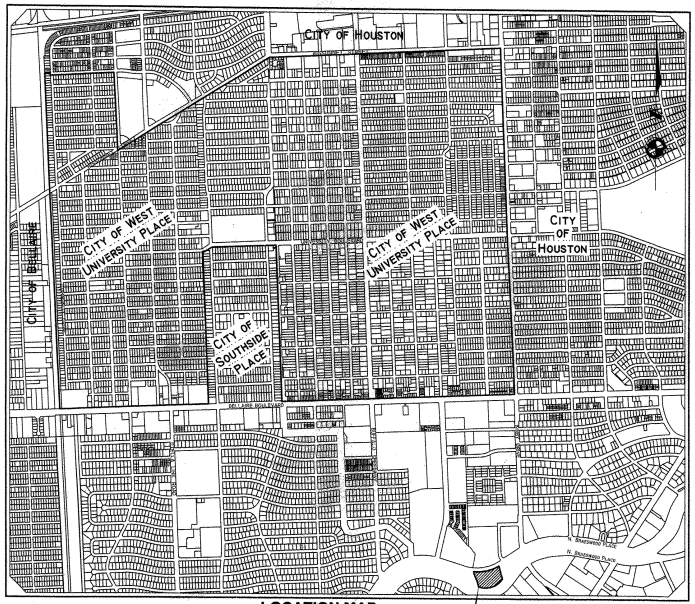

LOCATION MAP
NOT TO SCALE
KEY MAP - 532 A, B, E & F

SHEET NO.	SHEET TITLE
1	Cover Sheet
2	General Notes
3	Existing Site Plan
4	Mechanical Plan
5	Mechanical Sections
6	Details
7	Electrical Legends, Abbreviations and Notes
8	Electrical Site Plan
9	Electrical Plan
10	Electrical Sections
11	Electrical One-Line Diagram
12	Electrical Details

MAYOR

Bob Kelly

COUNCIL

Bob Fry (Mayor Pro-Tem) **Chuck Guffey**
George Bohme **Steven Segal**

CITY MANAGER

Michael G. Ross

Director of Public Works/Assisitant City Manager

Chris Peifer

STATE OF TEXAS
STEPHEN RATCLIFFE
85731
LICENSED
PROFESSIONAL ENGINEER

SUBMITTED BY: _____ DATE: 05/19/11
Stephen Ratcliffe, P.E.
HDR|Claunch & Miller

HDR | CLAUNCH & MILLER
Engineering Consultants
4635 Southwest Freeway, Suite 1000 • Houston, Texas 77027
(713) 622-9264 • Fax (713) 622-9265 • www.hdrinc.com
HDR Engineering Inc. Texas Reg. No. 754

HDR|C&M JOB NO. 10-098

APPROVED BY: _____ DATE: 5-19-11
FOR Chris Peifer
Director of Public Works

ILMS# _____ LOG NO: _____

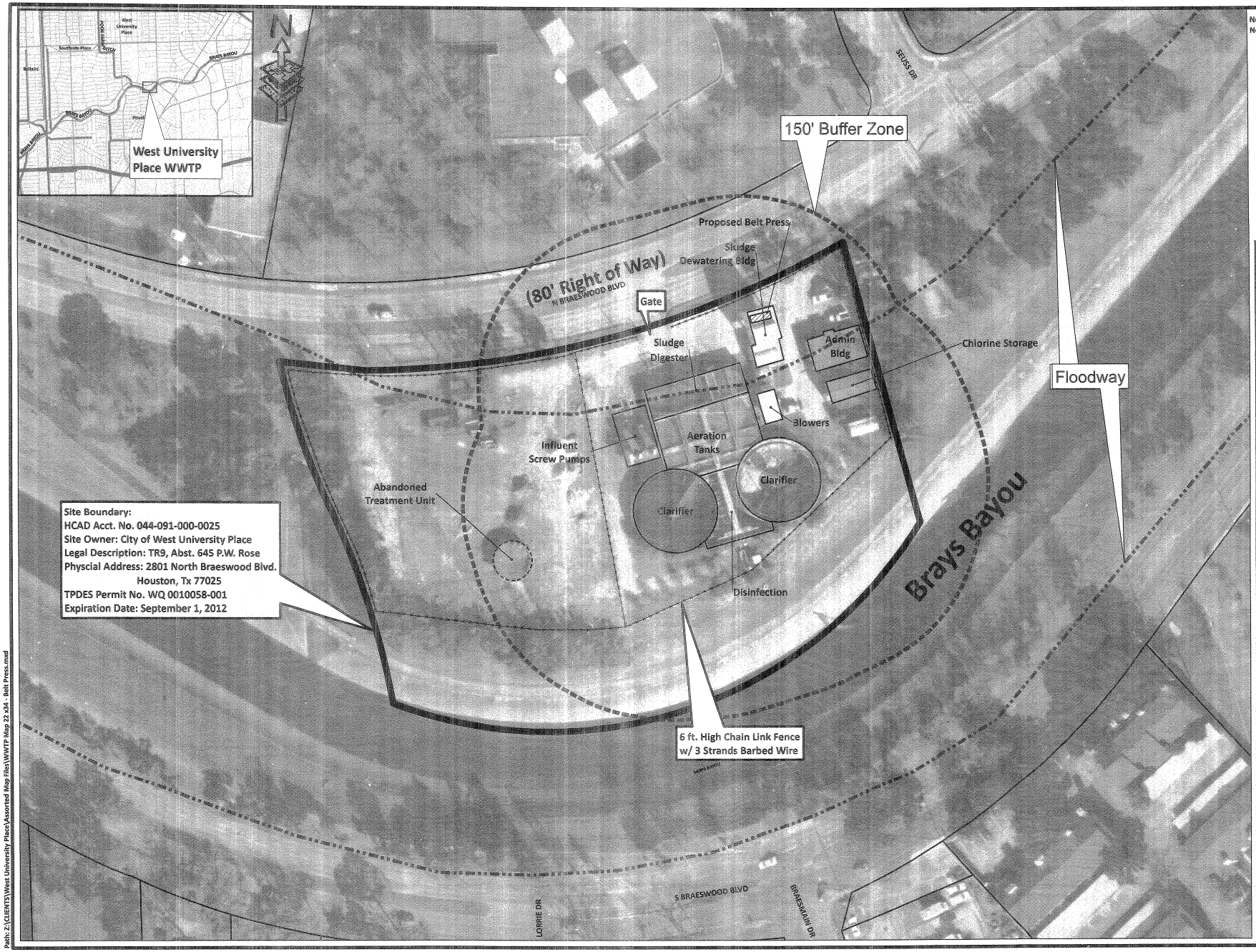

Notes:
No Storm Drainage Work is Required in this Project

NK.	DESCRIPTION	DATE	DWN.	CHK.

REVISIONS

PRIVATE UTILITY LINES SHOWN
AT LEAST 48 HOURS BEFORE EXCAVATING IN STREET R.O.W. OR EASEMENTS CALL THE LONE STAR NOTIFICATION 713-223-4567.

Date:
Centerpoint Energy/ Houston Lighting & Power Co.
(approved only for crossing underground ductlines, unless otherwise noted.)
Valid At Time Of Review Only

Date:
Approved for AT&T Texas/SBC underground conduit facilities only.
Signature valid for one year.

Date:
Centerpoint Energy/ ENTEX Incorporated
(ENTEX service lines are not shown.)

STATE OF TEXAS
STEPHEN RATCLIFFE
80731
LICENSED
PROFESSIONAL ENGINEER
05/19/11

HDR | CLAUNCH & MILLER
Engineering Consultants
4635 Southwest Freeway, Suite 1000 • Houston, Texas 77027
(713) 622-9264 • Fax (713) 622-9265 www.hdrinc.com
HDR Engineering Inc. Texas Reg. No. F-754

Job No.: 10-101	Dwn By:
NK. May, 2011	Chkd By:

City of West University Place, Texas
Proposed Belt Press

Existing Site Plan

NOTE: CITY SIGNATURES VALID FOR ONE YEAR ONLY AFTER DATE OF SIGNATURES

CITY OF HOUSTON
DEPARTMENT OF PUBLIC WORKS AND ENGINEERING

WATER	STREET & BRIDGE
WASTEWATER	TRAFFIC
STORM	STORM WATER QUALITY
FACILITIES	

FILE NO:

FOR CITY OF HOUSTON USE ONLY

DRAWING SCALE
HORZ : 1 " = 40 '
VERT :

SHEET No: 3 OF 12

Path: Z:\CLIENTS\West University Place\Assorted Map Files\WWTP Map 22 x34 - Belt Press.mxd

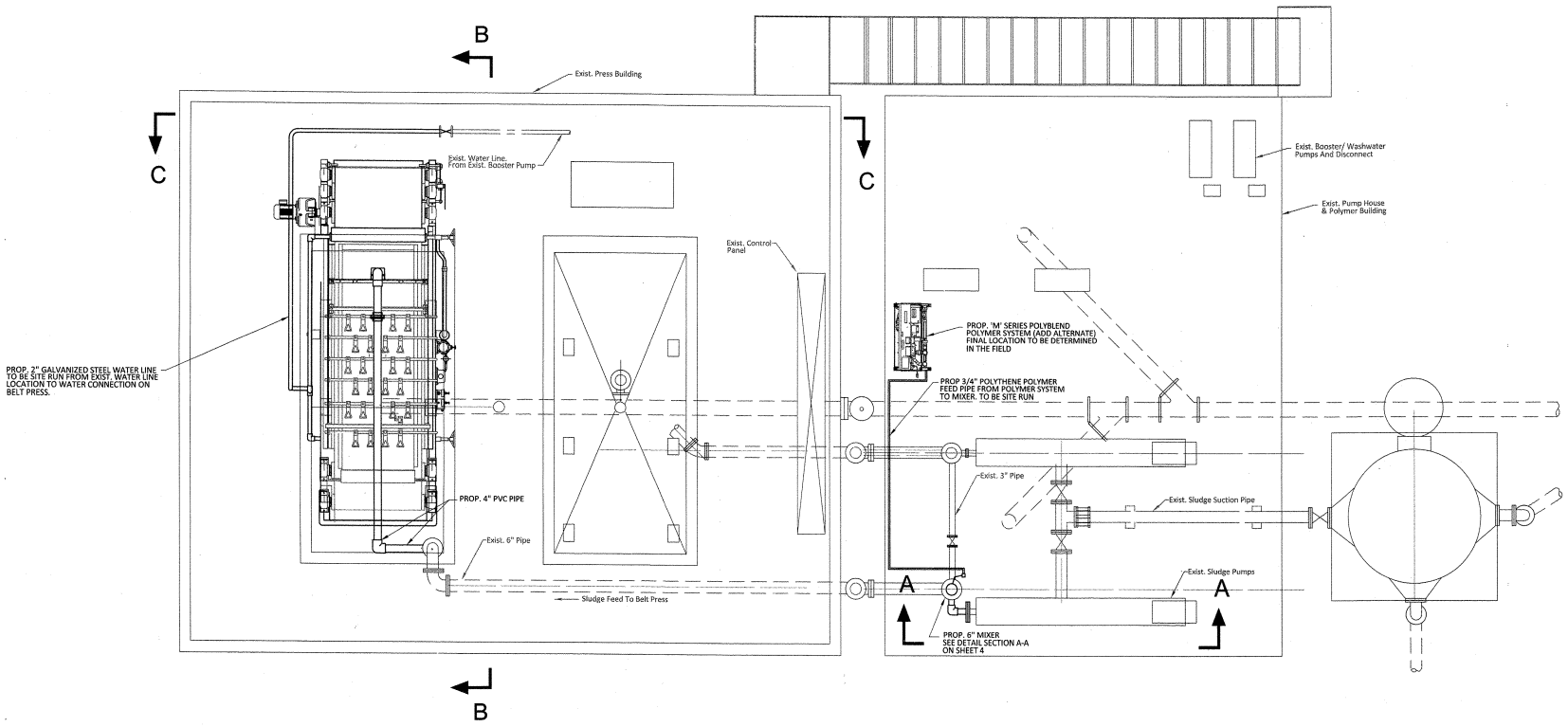

PRESS BUILDING PLAN

Scale : 3/8"=1'-0"

PRIVATE UTILITY LINES SHOWN

AT LEAST 48 HOURS BEFORE EXCAVATING IN STREET R.O.W. OR EASEMENTS CALL THE LONE STAR NOTIFICATION 713-223-4567.

Date:

Windstream Communications Approved for Underground Conduit Facilites Only. Signature Valid for One Year.

Date:

CenterPoint Energy Power Facilities (Approved Only for Crossing Underground Ductlines, Unless Otherwise Noted.) Valid at Time of Review Only.

Date:

CenterPoint Energy Gas Facilities (Service Lines are not Shown)

MK.	DESCRIPTION	DATE	DWN.	CHK.

STATE OF TEXAS
STEPHEN RATCLIFFE
LICENSED
PROFESSIONAL ENGINEER

05/19/11

HDR | CLAUNCH & MILLER
Engineering Consultants
4635 Southwest Freeway, Suite 1000 • Houston, Texas 77027
(713) 622-9264 • Fax (713) 622-9265 • www.claunchmiller.com
HDR Engineering Inc. Texas Reg. No. F-754

West University Place

Waste Water Treatment Plant
Belt Press Replacement

Mecanical Plan

Job No.: 10-098	Scale: 3/8 = 1'-0"	SHEET 4 OF 12
Date: May, 2011		
Dwn By: Cook, P		
Chkd By:Ratcliffe, S		

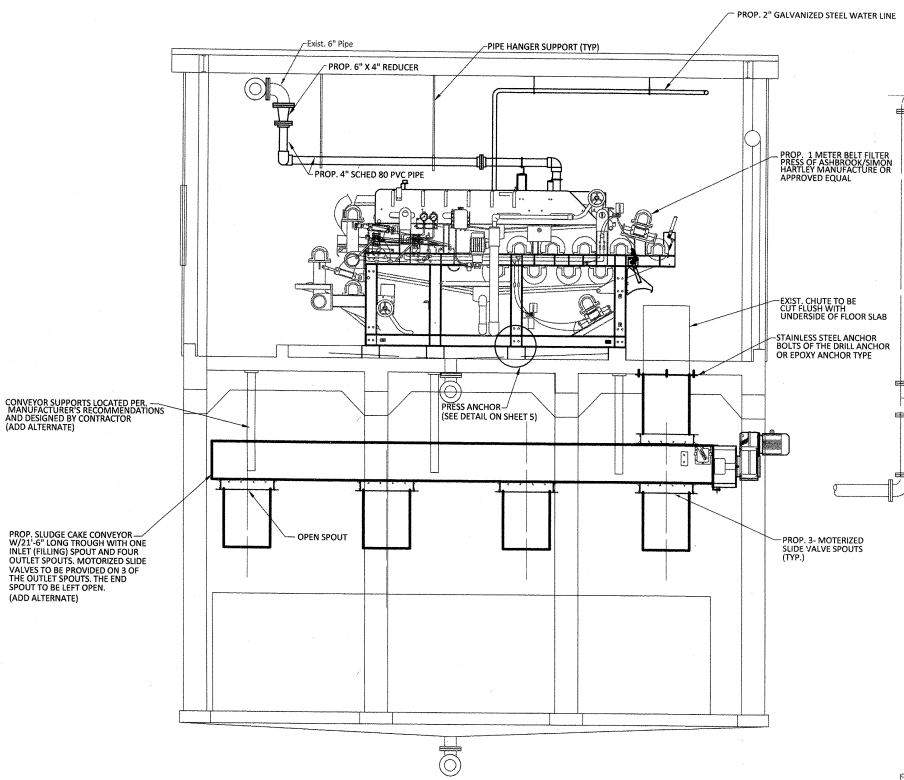

SECTION B-B
Scale : 3/8"=1'-0"

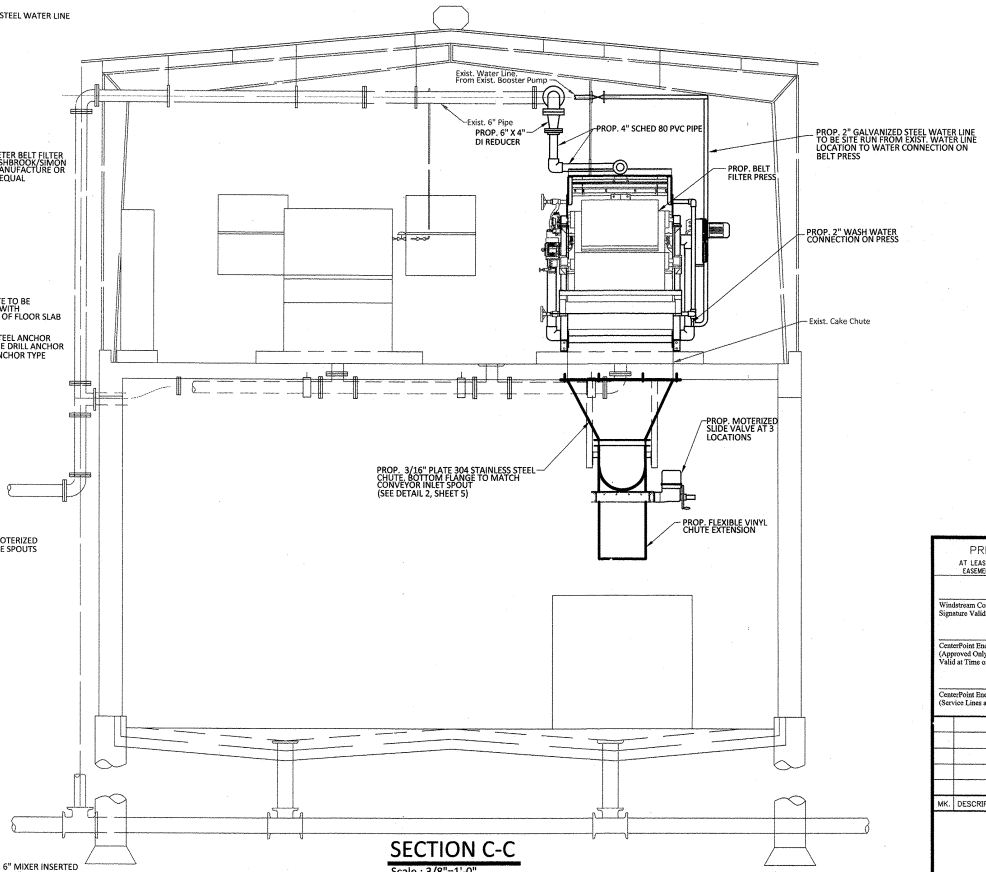

SECTION C-C
Scale : 3/8"=1'-0"

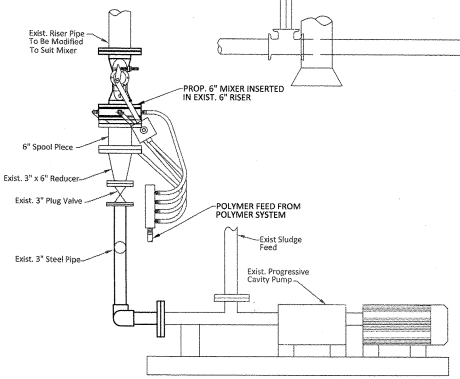

SECTION A-A
Scale : NTS

PRIVATE UTILITY LINES SHOWN
AT LEAST 48 HOURS BEFORE EXCAVATING IN STREET R.O.W. OR EASEMENTS CALL THE LONE STAR NOTIFICATION 713-223-4567.

Date:
Windstream Communications Approved for Underground Conduit Facilites Only
Signature Valid for One Year.

Date:
CenterPoint Energy Power Facilities
(Approved Only for Crossing Underground Ductlines, Unless Otherwise Noted.)
Valid at Time of Review Only.

Date:
CenterPoint Energy Gas Facilities
(Service Lines are not Shown)

MK.	DESCRIPTION	DATE	DWN.	CHK.

STATE OF TEXAS
STEPHEN RATCLIFFE
05/19/11

HDR | CLAUNCH & MILLER
Engineering Consultants
4635 Southwest Freeway, Suite 1000 • Houston, Texas 77027
(713) 622-9264 • Fax (713) 622-9265 • www.claunchmiller.com
HDR Engineering Inc. Texas Reg. No. F-754

West University Place

Waste Water Treatment Plant
Belt Press Replacement

Mechanical Sections

Job No.: 10-098	Scale:	SHEET 5 OF 12
Date: May, 2011		
Dwn By: Cook, P		
Chkd By:Ratcliffe, S		

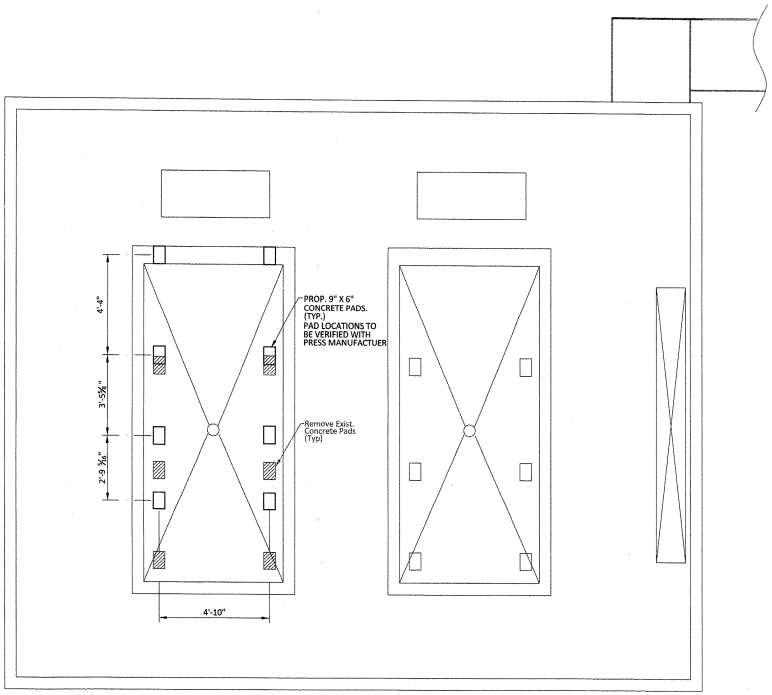

PRESS SUPPORT DETAIL

Scale : 3/8=1'-0"

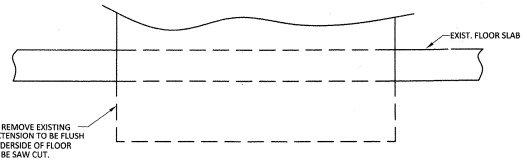

DETAIL 1
EXISTING CAKE CHUTE MODIFICATION

Scale : 1"=1'-0"

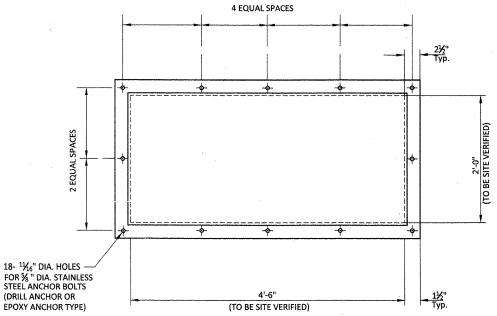

PLAN

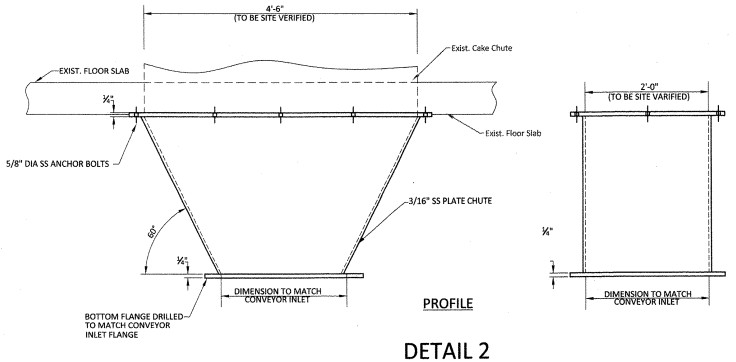

PROFILE

DETAIL 2
PROPOSED CAKE CHUTE EXTENSION

Scale : 1"=1'-0"

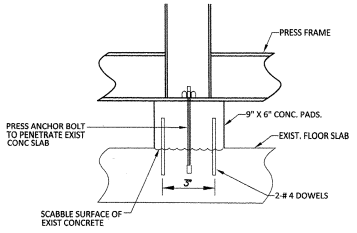

DETAIL 3
PRESS ANCHOR DETAIL

Scale : NTS

PRIVATE UTILITY LINES SHOWN

AT LEAST 48 HOURS BEFORE EXCAVATING IN STREET R.O.W. OR EASEMENTS CALL THE LONE STAR NOTIFICATION 713-223-4567.

Date:

Windstream Communications Approved for Underground Conduit Facilites Only. Signature Valid for One Year.

Date:

CenterPoint Energy Power Facilities
(Approved Only for Crossing Underground Ductlines, Unless Otherwise Noted.) Valid at Time of Review Only.

Date:

CenterPoint Energy Gas Facilities
(Service Lines are not Shown)

MK.	DESCRIPTION	DATE	DWN.	CHK.

STATE OF TEXAS
STEPHEN RATCLIFFE
LICENSED PROFESSIONAL ENGINEER
05/11/11

HDR | CLAUNCH & MILLER
Engineering Consultants
4635 Southwest Freeway, Suite 1000 • Houston, Texas 77027
(713) 622-9264 • Fax (713) 622-9265 • www.claunchmiller.com
HDR Engineering Inc. Texas Reg. No. F-754

West University Place

Waste Water Treatment Plant
Belt Press Replacement

Standard Details

Job No.: 10-098	Scale:	SHEET
Date: May, 2011		6
Dwn By: Cook, P		OF 12
Chkd By:Ratcliffe, S		

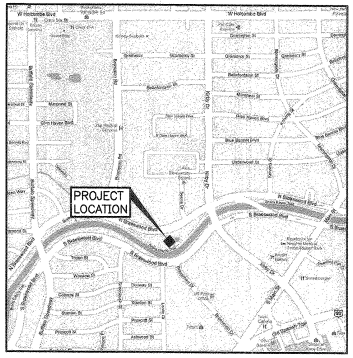

VICINITY MAP
KEYMAP #532L

PROJECT ADDRESS
2801 NORTH BRAESWOOD BOULEVARD HOUSTON, TX 77025

SEE SHEET E2 FOR ENLARGED PLAN

SLUDGE DEWATERING FACILITY

PRESS "E"

PRESS PANEL 2

PRESS PANEL 1

SLUDGE TRANSFER PUMPS

PRESS PANEL 1

POWER Co. SERVICE POLE

EXISTING UNDERGROUND CONDUITS (TYPICAL)

OFFICE & LAB

MCC

ATS

T2

PANEL "B"

PANEL "A"

XFMR "T2"

XFMR "T2"

CHLORINATOR BUILDING

ALL EXISTING UNLESS NOTED OTHERWISE

NOTES:

1. ALL WORK SHALL BE IN COMPLIANCE WITH THE LATEST EDITION OF THE NATIONAL ELECTRICAL CODE AND IN ACCORDANCE WITH LOCAL CODES.
2. CONDUITS SHALL NOT BE ROUTED ACROSS WALKWAYS, PATHS OF ACCESS, TRAVEL OR EGRESS. ROUTE IN CONCRETE STRUCTURES OR AROUND EQUIPMENT. DO NOT ROUTE IN CONFLICT WITH OTHER PIPING, CONDUITS, EQUIPMENT OR STRUCTURES. ROUTE DUCTBANKS 24 INCHES BELOW WATER LINES. DO NOT CUT SLABS, PUSH BENEATH.
3. FIELD VERIFY EXACT LOCATION OF ALL UNDERGROUND PIPES, CONDUITS, AND STRUCTURES BEFORE DIGGING. REPAIR ANY DAMAGE DONE TO ORIGINAL CONDITION.
4. PROVIDE 48 INCHES MINIMUM WORKSPACE IN FRONT OF ELECTRICAL EQUIPMENT.
5. CONTRACTOR SHALL READ ENTIRE CONTENTS OF SPECIFICATION SECTION ENTITLED "ELECTRICAL WORK" 16012 AND OTHER REFERENCED SPECIFICATIONS CONTAINED THEREIN BEFORE BIDDING ON THIS PROJECT. FAILURE TO DO SO IS AT CONTRACTORS RISK AND AT NO ADDITIONAL COST TO OWNER.
6. REFER TO SPECIFICATION SECTION 16195 "ELECTRICAL IDENTIFICATION" FOR LABELING REQUIREMENTS. ALL CONDUITS, CONDUCTORS AND ENCLOSURES ARE TO BE LABELED IN ACCORDANCE TO SPECIFICATIONS.
7. EXISTING UNDERGROUND CONDUITS ARE LOCATED BY AVAILABLE DOCUMENTATION. FIELD VERIFY EXACT LOCATION.

ELECTRICAL SITE PLAN
SCALE: NTS

E1

SHRADER ENGINEERING
Electrical • Mechanical • Information Technology
SHRADER ENGINEERING, INC. TBPE No. F-527
These drawings may not be copied or reproduced for purposes other than this project unless authorized in writing by Shrader Engineering, Inc. © 2011

ENGINEER: CWS	DESIGNER: EAE	CHECKED BY: CWS	DATE CHKD: May. 19, 11	DRAWN BY: TAD

MK.	DESCRIPTION	DATE	DWN.	CHK.

STATE OF TEXAS
CHAL SHRADER, III
40269
REGISTERED PROFESSIONAL ENGINEER
May 19, 2011
SHRADER ENGINEERING, INC.

HDR | CLAUNCH & MILLER
Engineering Consultants
4635 Southwest Freeway, Suite 1000 • Houston, Texas 77027
(713) 622-9264 • Fax (713) 622-9265 • www.clauchmiller.com
HDR Engineering Inc. Texas Reg. No. F-754

West University Place

Waste Water Treatment Plant
Belt Press Replacement

ELECTRICAL SITE PLAN

Job No.: 10-098	Scale:	SHEET
Date: May, 2011		8
Dwn By:		OF 12
Chkd By:		

NOTES:
1. CONTRACTOR IS TO COORDINATE AND PROVIDE ALL CONDUIT AND CONDUCTORS FOR ENTIRE BELT PRESS SYSTEM.
2. COORDINATE CONDUIT STUB-UP LOCATIONS WITH EQUIPMENT INSTALLATION. ROUTE UNDER STRUCTURE; DO NOT ROUTE ACROSS CONCRETE OR PATHS OF ACCESS.
3. PROVIDE CIRCUITS TO DEVICES REQUIRED FOR NEW BELT PRESS INSTALLATION AND OPERATION. ALL EXTERNAL DEVICES TO BE PROVIDED BY BELT PRESS VENDOR. ALL INTERLOCKING BETWEEN PANELS BY VENDOR.
4. SEE SHEET E1 FOR ADDITIONAL NOTES.
5. INTERLOCK POLYMER SYSTEM WITH BELT PRESS PANELS. PROVIDE 120/240V. POWER FROM LVP IN BELT PRESS PANEL.

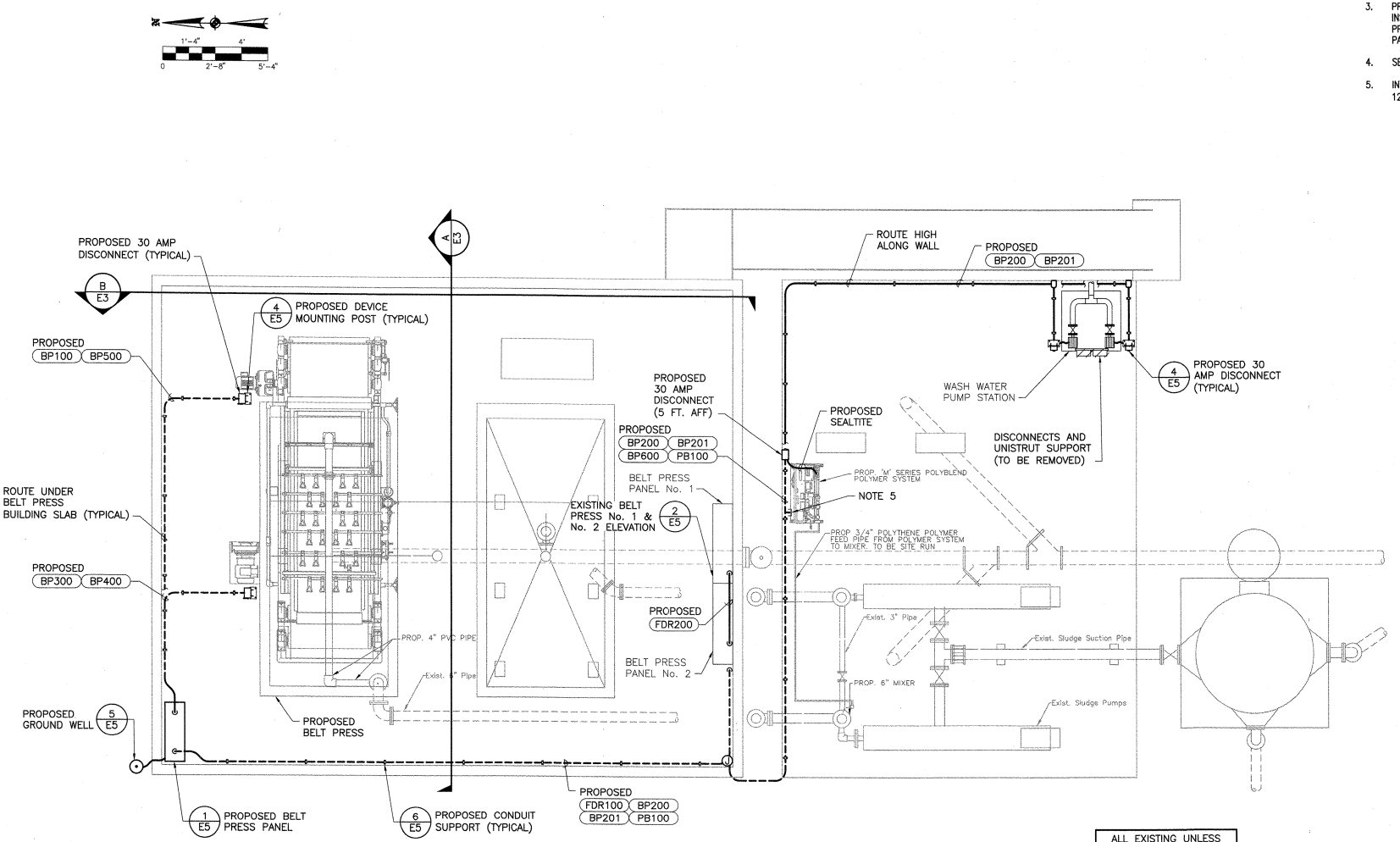

BELT PRESS BUILDING ENLARGED ELECTRICAL PLAN

SCALE: 3/8 IN. = 1 FT. (NOTES 1 & 2)

SHRADER ENGINEERING
Electrical • Mechanical • Information Technology
SHRADER ENGINEERING, INC. TBPE No. F-527
These drawings may not be copied or reproduced for purposes other than this project unless authorized in writing by Shrader Engineering, Inc. © 2011

ENGINEER: CWS	DESIGNER: EAE	CHECKED BY: CWS	DATE CHKD.: May. 19, 11	DRAWN BY: TAD

MK.	DESCRIPTION	DATE	DWN.	CHK.

STATE OF TEXAS CHAL SHRADER 40269 REGISTERED PROFESSIONAL ENGINEER
May. 19, 2011
SHRADER ENGINEERING, INC.

HDR | CLAUNCH & MILLER
Engineering Consultants
4635 Southwest Freeway, Suite 1000 • Houston, Texas 77027
(713) 622-9264 • Fax (713) 622-9265 • www.clauchmiller.com
HDR Engineering Inc. Texas Reg. No. F-754

West University Place

Waste Water Treatment Plant
Belt Press Replacement

ELECTRICAL PLAN

Job No.: 10-098	Scale:	SHEET 9 OF 12
Date: May, 2011		
Dwn By:		
Chkd By:		

E2

HDR-HSR

NOTES:
1. CONTRACTOR IS TO COORDINATE AND PROVIDE ALL CONDUIT, CONDUCTORS AND DEVICES FOR ENTIRE BELT PRESS SYSTEM.
2. COORDINATE CONDUIT STUB-UP LOCATIONS WITH EQUIPMENT INSTALLATION. ROUTE UNDER STRUCTURE; DO NOT ROUTE ACROSS CONCRETE OR PATHS OF ACCESS.
3. CONTRACTOR IS TO COORDINATE WITH BELT PRESS MANUFACTURER TO PROVIDE LOCAL CONTROLS FOR SLIDE GATES. FIELD LOCATE PER MANUFACTURER.

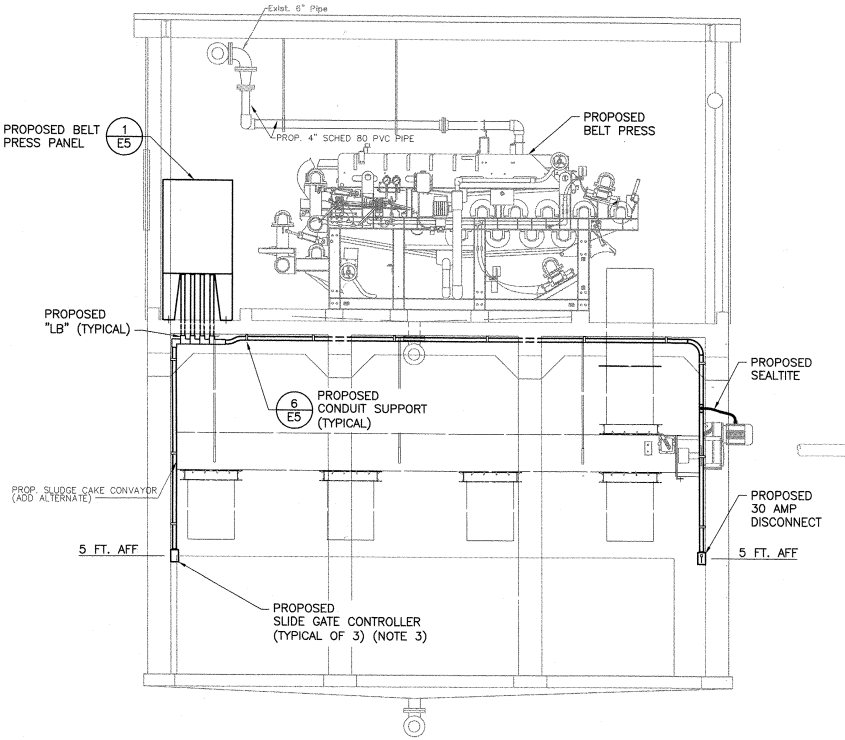

BELT PRESS BUILDING SECTION A / E2
SCALE: 3/8 IN. = 1 FT. (NOTES 1 & 2)

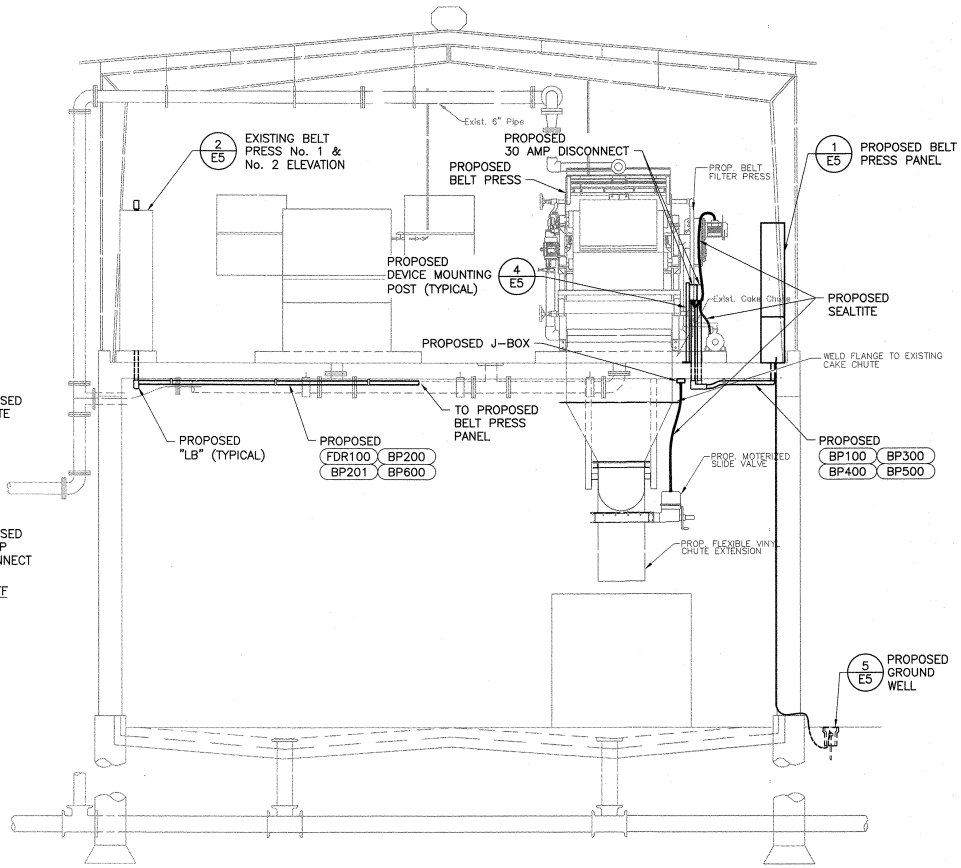

BELT PRESS BUILDING SECTION B / E2
SCALE: 3/8 IN. = 1 FT. (NOTES 1 & 2)

ALL EXISTING UNLESS NOTED OTHERWISE

E3

SHRADER ENGINEERING
Electrical • Mechanical • Information Technology
SHRADER ENGINEERING, INC. TBPE No. F-527
These drawings may not be copied or reproduced for purposes other than this project unless authorized in writing by Shrader Engineering, Inc. © 2011

ENGINEER: CWS	DESIGNER: EAE	CHECKED BY: CWS	DATE CHKD.: May. 19, 11	DRAWN BY: TAD

MK.	DESCRIPTION	DATE	DWN.	CHK.

STATE OF TEXAS
CHAL SHRADER, P.E.
40269
REGISTERED PROFESSIONAL ENGINEER
May 19, 2011
SHRADER ENGINEERING, INC.

HDR | CLAUNCH & MILLER
Engineering Consultants
4635 Southwest Freeway, Suite 1000 • Houston, Texas 77027
(713) 622-9264 • Fax (713) 622-9265 • www.claunchmiller.com
HDR Engineering Inc. Texas Reg. No. F-754

West University Place

Waste Water Treatment Plant
Belt Press Replacement

ELECTRICAL SECTIONS

Job No.: 10-098	Scale:	SHEET 10 OF 12
Date: May, 2011		
Dwn By:		
Chkd By:		

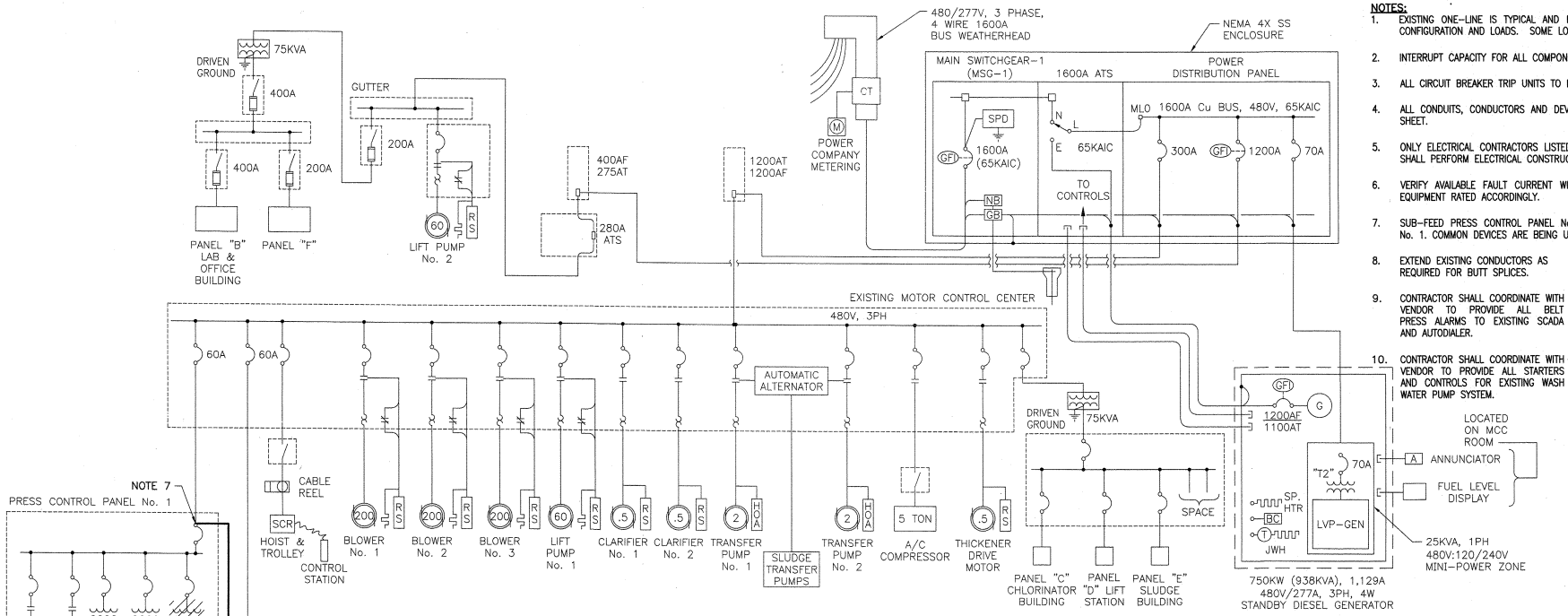

ONE-LINE DIAGRAM

ALL EXISTING UNLESS NOTED OTHERWISE

E4

NOTES:

1. EXISTING ONE-LINE IS TYPICAL AND MAY VARY. FIELD VERIFY EXISTING CONFIGURATION AND LOADS. SOME LOADS MAY NOT BE SHOWN.
2. INTERRUPT CAPACITY FOR ALL COMPONENTS SHALL BE SAME AS SERVICE.
3. ALL CIRCUIT BREAKER TRIP UNITS TO BE REMOVABLE BOLT ON TYPE.
4. ALL CONDUITS, CONDUCTORS AND DEVICES MAY NOT BE SHOWN ON THIS SHEET.
5. ONLY ELECTRICAL CONTRACTORS LISTED IN SPECIFICATION 16012, 1.06, E, SHALL PERFORM ELECTRICAL CONSTRUCTION ON THIS PROJECT.
6. VERIFY AVAILABLE FAULT CURRENT WITH POWER COMPANY AND PROVIDE EQUIPMENT RATED ACCORDINGLY.
7. SUB-FEED PRESS CONTROL PANEL No. 2 FROM PRESS CONTROL PANEL No. 1. COMMON DEVICES ARE BEING USED AND LOAD WILL NOT CHANGE.
8. EXTEND EXISTING CONDUCTORS AS REQUIRED FOR BUTT SPLICES.
9. CONTRACTOR SHALL COORDINATE WITH VENDOR TO PROVIDE ALL BELT PRESS ALARMS TO EXISTING SCADA AND AUTODIALER.
10. CONTRACTOR SHALL COORDINATE WITH VENDOR TO PROVIDE ALL STARTERS AND CONTROLS FOR EXISTING WASH WATER PUMP SYSTEM.

ELECTRICAL LOAD ANALYSIS

LOAD (NOTE 7)		AMPS ø A	ø B	ø C
EXISTING LOADS				
BLOWERS	3-200HP	720	720	720
LIFT PUMP NO. 1	1-60HP	77	77	77
TRANSFORMER "T2"	1-75KVA	91	91	91
CLARIFIERS	2-1/2HP	2	2	2
TRANSFER PUMPS	2-2HP	7	7	7
THICKENER	1-1/2HP	1	1	1
AIR COMPRESSOR		8	8	8
CABLE REEL		24	24	24
BELT PRESS	2	100	100	100
SUB TOTAL - MCC FEEDER		1030	1030	1030
LIFT PUMP NO. 2	1-60HP	77	77	77
TRANSFORMER "T1"	1-75KVA	91	91	91
SUB TOTAL - MISC. FEEDER		168	168	168
MINI-POWER ZONE	1-25KVA	52	–	52
25% OF LARGEST MOTOR		60	60	60
TOTAL LOAD		1310	1258	1310
SERVICE AMPACITY @ 480/277V, 3PH, 4W		1600	1600	1600
SPARE AMPACITY		290	342	290

CALCULATED MAXIMUM AVAILABLE FAULT CURRENT = 57,221 AMPS. USE 65 KAIC RATED DEVICES AND BRACING

SHRADER ENGINEERING
Electrical • Mechanical • Information Technology
SHRADER ENGINEERING, INC. TBPE No. F-527

These drawings may not be copied or reproduced for purposes other than this project unless authorized in writing by Shrader Engineering, Inc. © 2011

ENGINEER:	DESIGNER:	CHECKED BY:	DATE CHKD.:	DRAWN BY:
CWS	EAE	CWS	May. 19, 11	TAD

MK.	DESCRIPTION	DATE	DWN.	CHK.

STATE OF TEXAS
CHAL SHRADER, P.E.
40269
REGISTERED PROFESSIONAL ENGINEER
May 19, 2011
SHRADER ENGINEERING, INC.

HDR | CLAUNCH & MILLER
Engineering Consultants
4635 Southwest Freeway, Suite 1000 • Houston, Texas 77027
(713) 622-9264 • Fax (713) 622-9265 • www.claunchmiller.com
HDR Engineering Inc. Texas Reg. No. F-754

West University Place

Waste Water Treatment Plant
Belt Press Replacement

ELECTRICAL
ONE-LINE DIAGRAM

Job No.: 10-098	Scale:	SHEET 11 OF 12
Date: May, 2011		
Dwn By:		
Chkd By:		

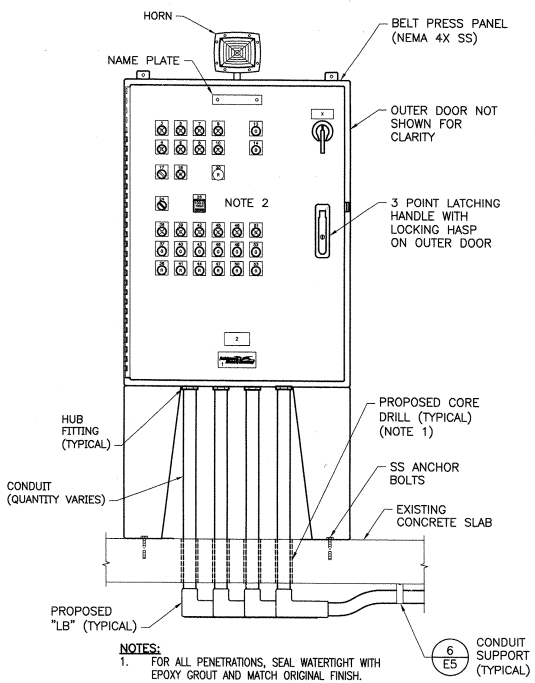

NOTES:
1. FOR ALL PENETRATIONS, SEAL WATERTIGHT WITH EPOXY GROUT AND MATCH ORIGINAL FINISH.
2. PROVIDE NAMEPLATES FOR ALL CONTROL DEVICES.

PROPOSED BELT PRESS CONTROL PANEL DETAIL 1
NTS (VENDOR FURNISHED) E2,E3

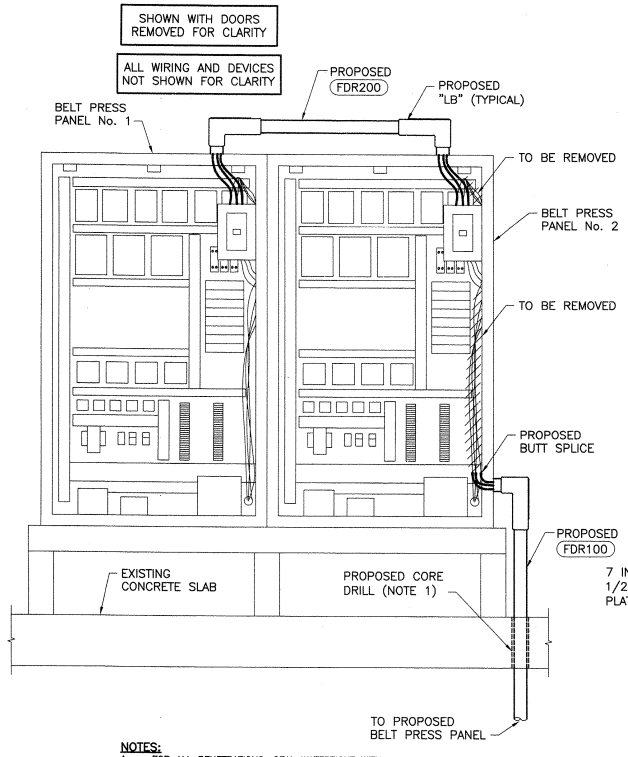

NOTES:
1. FOR ALL PENETRATIONS, SEAL WATERTIGHT WITH EPOXY GROUT AND MATCH ORIGINAL FINISH.

EXISTING BELT PRESS CONTROL PANELS ELEVATION 2
NTS E2,E3

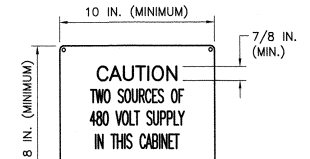

NOTES:
1. MOUNT ON OUTSIDE OF BELT PRESS No. 2 ENCLOSURE.

DUAL SOURCE SIGN DETAIL 3
NTS -

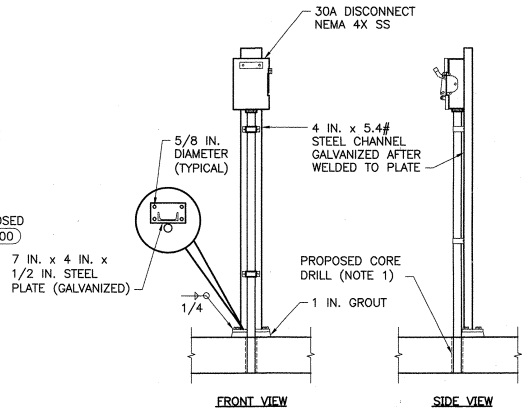

NOTES:
1. SEAL ALL PENETRATIONS, WATERTIGHT WITH EPOXY GROUT. MATCH ORIGINAL FINISH.

DEVICE MOUNTING POST DETAIL 4
NTS E2,E3

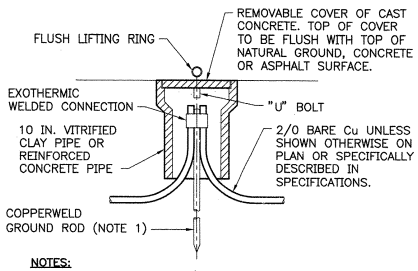

NOTES:
1. GROUND ROD SHALL BE 3/4 IN. x 20 FT. FOR SURGE PROTECTION GROUND AND LIGHTNING PROTECTION SYSTEMS. ALL OTHER APPLICATIONS SHALL BE 3/4 IN. x 10 FT.

GROUND WELL DETAIL 5
NTS (TYPICAL) E2,E3, E4

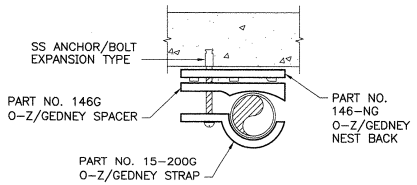

CONDUIT SUPPORT DETAIL 6
NTS E2,E3,E5

SHRADER ENGINEERING
Electrical • Mechanical • Information Technology
SHRADER ENGINEERING, INC. TBPE No. F-527
These drawings may not be copied or reproduced for purposes other than this project unless authorized in writing by Shrader Engineering, Inc. © 2011

ENGINEER:	DESIGNED:	CHECKED BY:	DATE CHKD.:	DRAWN BY:
CWS	EAP	CWS	May. 19, 11	TAD

MK.	DESCRIPTION	DATE	DWN.	CHK.

STATE OF TEXAS
CHAL SHRADER, JR.
40269
REGISTERED PROFESSIONAL ENGINEER
May 19, 2011
SHRADER ENGINEERING, INC.

HDR | CLAUNCH & MILLER
Engineering Consultants
4635 Southwest Freeway, Suite 1000 • Houston, Texas 77027
(713) 622-9264 • Fax (713) 622-9265 • www.claunchmiller.com
HDR Engineering Inc. Texas Reg. No. F-754

West University Place

Waste Water Treatment Plant
Belt Press Replacement

ELECTRICAL DETAILS

Job No.: 10-098	Scale:	SHEET
Date: May, 2011		12
Dwn By:		OF 12
Chkd By:		

City of West University Place

Standby Generator
For
Wastewater Treatment Plant

May, 2011

APPROVED
FOR BUILDING PERMIT ONLY
CITY OF HOUSTON
CODE ENFORCEMENT DIVISION
The owner is responsible for compliance with the Building Code. Such approved plans and specifications shall not be changed, modified or altered without authorizations from the building official, and all work shall be done in accordance with the approved plans.
356

INSTALLATION.

DRAIN
Storm water runoff must not ... The population of the area ... shall not cause the capacity of any part of the existing C.O.H. storm sewer system to be exceeded. Responsibility for any impact on the C.O.H. system lies with the designer of proposed project.
No. 35S

THIS PROJECT INCLUDES WORK TO BE PERFORMED IN THE CITY OF HOUSTON'S RIGHT OF WAY AND MUST BE PERMITTED PRIOR TO CONSTRUCTION
CONTACT THE REQUIRED SECTIONS BELOW AS INDICATED FOR PERMIT

LOCATION-3300 MAIN / 2102 AUSTIN
- ☐ PAVING 713 535 7579
- ☐ STORM 713 535 7579
- ☐ ALLEY 713 535 7579
- ☒ SANITARY 832 395 4370
- ☐ WATER 832 395 4370

LOCATION-2102 AUSTIN
- ☐ STREET CUT 832-395-4407
- www.gims.houstontx.gov
- ☒ EXCAVATION IN CITY ROW

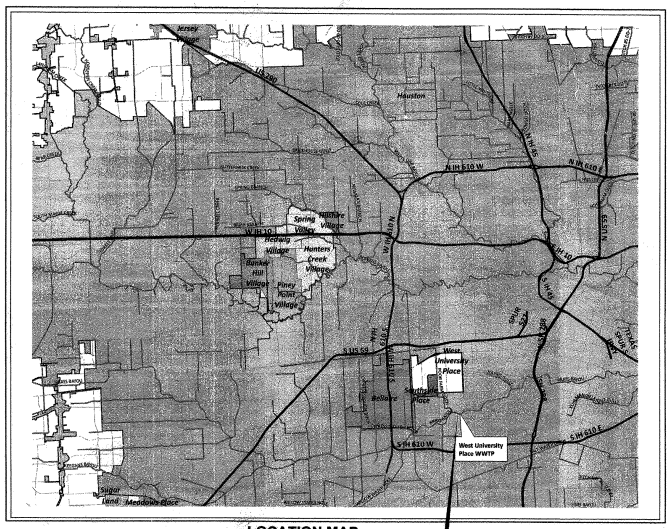

LOCATION MAP
NOT TO SCALE
KEY MAP - 532 L

PROJECT LOCATION
2801 NORTH BRAESWOOD BLVD.
HOUSTON, TEXAS

THE CITY OF WEST UNIVERSITY PLACE TEXAS

DEPARTMENT OF RURAL AFFAIRS STATE OF TEXAS

MAYOR
Bob Kelly

COUNCIL
Bob Fry (Mayor Pro-Tem) **Chuck Guffey**
George Bohme **Steven Segal**

CITY MANAGER
Michael G. Ross

Director of Public Works/Assisitant City Manager
Chris Peifer

SHEET NO.	SHEET TITLE
1.	Cover Sheet
2A&2.	Existing Site Plan
3.	Electrical Legend, Abbreviations & General Notes
4.	Electrical Site Plan
5.	Electrical One Line Diagram
6.	Electrical Existing One-Line Diagram
7.	Electrical General Details 1
8.	Electrical General Details 2
9.	Electrical Generator Details
10.	Electrical Schedules
11.	Structural Notes & Typical Details
12A&B2.	Foundation Details
13.	Project Sign

△ - Sheets 2A, 12A, and 12B are added

NOTE: CITY SIGNATURES VALID FOR ONE YEAR ONLY AFTER DATE OF SIGNATURES 11-0342
ILMS# ~~10005315~~ 11036232 COH LOG ~~#10-0650~~

ADDRESS IDENTIFYING ADDRESS NUMBERS MUST BE POSTED ON BUILDING PRIOR TO FINAL INSPECTION. CHAPTER 10 ARTICLE V OF THE CITY CODE OF ORDINANCES

SUBMITTED BY: _____ DATE: 05/19/11
Stephen Ratcliffe, P.E.
HDR|Claunch & Miller, Inc.

APPROVED BY: _____ DATE: 5-19-11
FOR Chris Peifer
Director of Public Works

HDR|CLAUNCH & MILLER
4635 SW Fwy., Suite 1000
Houston, TX. 77027
(713) 622-9264

SURVEYED BY: Landtech
FB NO.: 569-242

STATE OF TEXAS — STEPHEN RATCLIFFE — 85731 — 5/19/11

CITY OF HOUSTON
DEPARTMENT OF PUBLIC WORKS AND ENGINEERING

WATER — STORM — TRAFFIC AND TRANSPORTATION — FACILITIES — STORM WATER QUALITY — CITY ENGINEER — DIRECTOR OF PUBLIC WORKS AND ENGINEERING

FOR CITY OF HOUSTON USE ONLY
CITY ENG. NO.
ACCEPTED AND FILED
48433

SHEET No: 1 OF 16

HDR|CLAUNCH & MILLER
Engineering Consultants
4635 Southwest Freeway, Suite 1000 • Houston, Texas 77027
(713) 622-9264 • Fax (713) 622-9265 • www.hdrinc.com
HDR Engineering Inc. Texas Reg. No. 754

HDR|C&M JOB NO. 10-101

#11086500

42146 Hemstead Waller TX

Bill Pafford 713-466-6679

Dale Grimes C-281-827-7326 O-281-310-6822

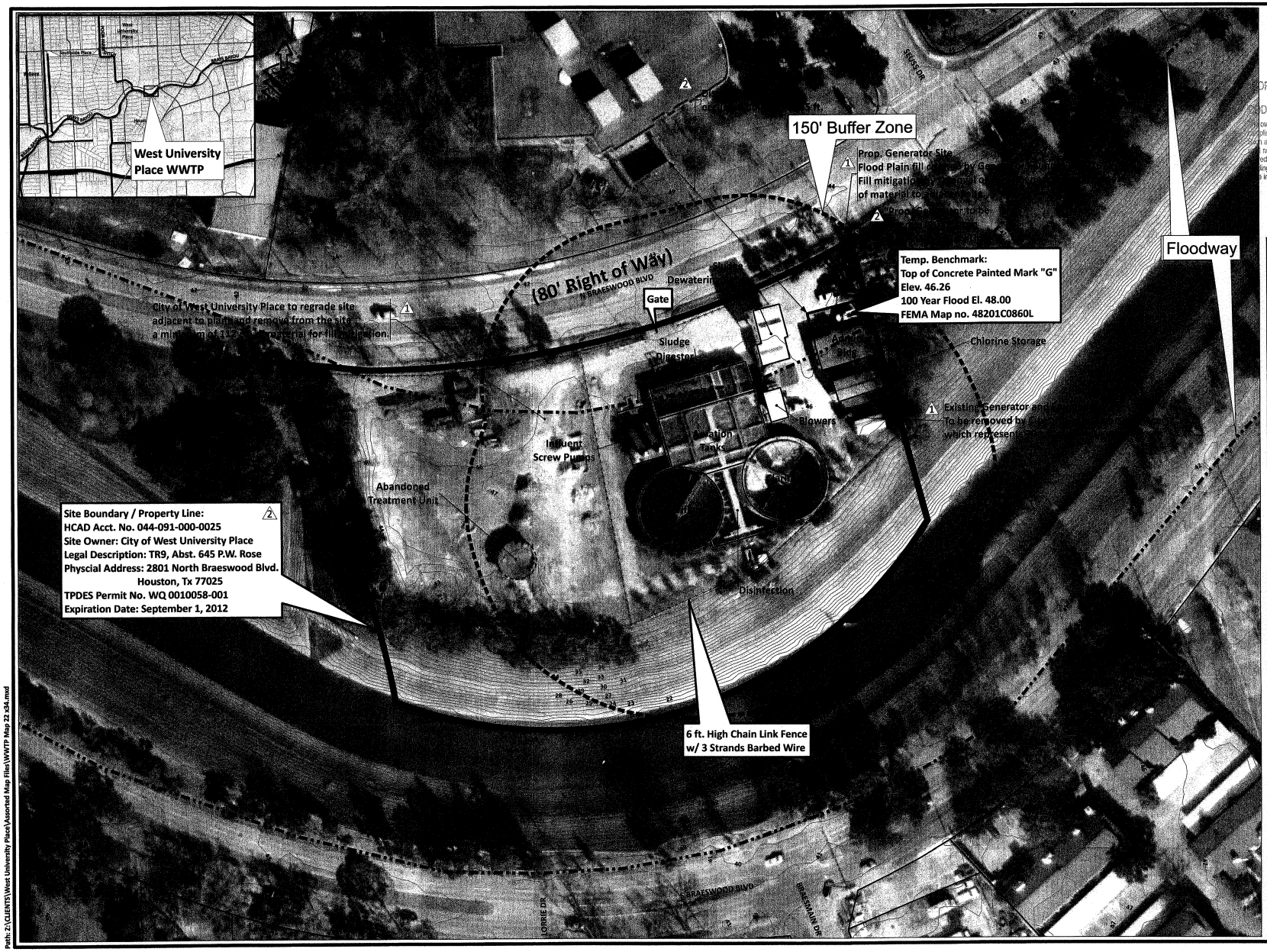

Path: Z:\CLIENTS\West University Place\Assorted Map Files\WWTP Map 22 x34.mxd

Note:
No known easements or setbacks lines exist for the WWTP Site.

APPROVED
FOR BUILDING PERMIT ONLY
CITY OF HOUSTON
CODE ENFORCEMENT DIVISION

owner is responsible for
pliance with the Building Code.
n approved plans and specifications
not be changed, modified or
ed without authorizations from the
ing official, and all work shall be
in accordance with the approved plans.

356

MK.	DESCRIPTION	DATE	DWN.	CHK.
2	Notes Added	9/30/11	LST	SR
1	Notes Added	8/1/11	LST	SR

REVISIONS

PRIVATE UTILITY LINES SHOWN
AT LEAST 48 HOURS BEFORE EXCAVATING IN STREET R.O.W. OR EASEMENTS CALL THE LONE STAR NOTIFICATION 713-223-4567.

Centerpoint Energy/ Houston Lighting & Power Co. (approved only for crossing underground ductlines, unless otherwise noted.) Valid At Time Of Review Only

Approved for AT&T Texas/SBC underground conduit facilities only. Signature valid for one year.

Centerpoint Energy/ ENTEX Incorporated (ENTEX service lines are not shown.)

STATE OF TEXAS
STEPHEN PATCLIFFE
83751
10/03/11

HDR | CLAUNCH & MILLER
Engineering Consultants
4635 Southwest Freeway, Suite 1000 • Houston, Texas 77027
(713) 622-9264 • Fax (713) 622-9265 www.hdrinc.com
HDR Engineering Inc. Texas Reg. No. F-754

Job No.: 10-101	Dwn By:
MK. May, 2011	Chkd By:

City of West University Place, Texas
Standby Generator
for Wastewater Treatment Plant

Existing Site Plan

NOTE: CITY SIGNATURES VALID FOR ONE YEAR ONLY AFTER DATE OF SIGNATURES

CITY OF HOUSTON
DEPARTMENT OF PUBLIC WORKS AND ENGINEERING

WATER	STREET & DRIDGE
WASTEWATER	TRAFFIC
STORM	STORM WATER QUALITY
FACILITIES	

FILE NO:

FOR CITY OF HOUSTON USE ONLY

DRAWING SCALE
HORZ : 1 " = 40 '
VERT :

SHEET No: 2 OF 13

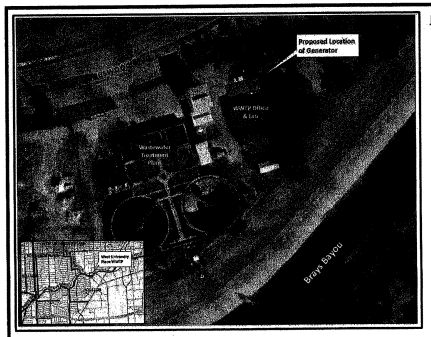

VICINITY MAP
KEYMAP #532L

PROJECT ADDRESS
2801 NORTH BRAESWOOD BOULEVARD HOUSTON, TX 77025

NOTES:

1. ALL WORK SHALL BE IN COMPLIANCE WITH THE LATEST EDITION OF THE NATIONAL ELECTRICAL CODE AND IN ACCORDANCE WITH LOCAL CODES.
2. CONDUITS SHALL NOT BE ROUTED ACROSS WALKWAYS, PATHS OF ACCESS, TRAVEL OR EGRESS. ROUTE IN CONCRETE STRUCTURES OR AROUND EQUIPMENT. DO NOT ROUTE IN CONFLICT WITH OTHER PIPING, CONDUITS, EQUIPMENT OR STRUCTURES. ROUTE DUCTBANKS 24 INCHES BELOW WATER LINES. DO NOT CUT SLABS, PUSH BENEATH.
3. FIELD VERIFY EXACT LOCATION OF ALL UNDERGROUND PIPES, CONDUITS, AND STRUCTURES BEFORE DIGGING. REPAIR ANY DAMAGE DONE TO ORIGINAL CONDITION.
4. PROVIDE 48 INCHES MINIMUM WORKSPACE IN FRONT OF ELECTRICAL EQUIPMENT.
5. REMOVE ALL UNUSED CONDUITS, BOXES, AND ELECTRICAL DEVICES PER SPECIFICATION 16060.
6. DO NOT CONSTRUCT WITHIN ELECTRICAL EASEMENTS. WHERE OVERHEAD OR UNDERGROUND UTILITY LINES EXIST, CONTACT ENGINEER BEFORE STARTING ANY WORK, AND BEFORE ROUTING ANY CONDUITS OR PIPING TOWARD THE LOCATION OF EXISTING UTILITIES.
7. DO NOT COVER WATER, WASTE OR GAS LINES WITH CONCRETE FOUNDATIONS. FIELD LOCATE AND MARK ALL LINES NEAR CONSTRUCTION.
8. ALL UNDERGROUND DUCTBANKS REQUIRE INSPECTION PRIOR TO CONCRETE POUR AND INSPECTION PRIOR TO COVERING THE CONCRETE. CONTACT THE INSPECTOR OR, IF NOT AVAILABLE, CONTACT THE ENGINEER FOR INSPECTIONS. SCHEDULE MINIMUM 48 HOURS IN ADVANCE. ANY DUCTBANKS NOT INSPECTED WILL BE REQUIRED TO BE EXPOSED FOR INSPECTION BY ENGINEER REGARDLESS OF STATUS OF CONCRETE SLABS OR FOUNDATIONS.
9. CONCRETE SPOILS SHALL NOT BE DUMPED ON SITE WITHOUT APPROVAL BY ENGINEER OR OWNER. DO NOT OVER-POUR DUCTBANKS. MAINTAIN VERTICALLY STRAIGHT WALLS BEFORE CONCRETE POUR.
10. LOCATE UNDERGROUND PULL BOXES AT MINIMUM 4 FEET FROM EDGE OF PAVEMENT OR CURB.
11. CONTRACTOR SHALL READ ENTIRE CONTENTS OF SPECIFICATION SECTION ENTITLED "ELECTRICAL WORK" 16012 AND OTHER REFERENCED SPECIFICATIONS CONTAINED THEREIN BEFORE BIDDING ON THIS PROJECT. FAILURE TO DO SO IS AT CONTRACTORS RISK AND AT NO ADDITIONAL COST TO OWNER.
12. NO DEVICES ALLOWED ON OUTER DOORS OF ENCLOSURE.
13. ALL CONCRETE FOUNDATIONS AND PADS FOR ELECTRICAL EQUIPMENT ARE SHOWN AS MINIMUM ABOVE FINISHED GRADE AND DO NOT INCLUDE THE MINIMUM ELEVATION REQUIRED BY FLOOD PLAIN LEVEL. REFER TO CIVIL PLANS FOR FLOOD PLAIN LEVEL AND USE FOR MINIMUM ELEVATIONS FOR ELECTRICAL PADS.
14. DO NOT SCALE ELECTRICAL EQUIPMENT, DEVICES AND FOUNDATION DIMENSIONS, SPACING OR LOCATION ON ELECTRICAL SITE PLAN. SEE ELECTRICAL PLAN SHEETS AND DETAIL SHEETS OR EXACT INFORMATION. SEE CIVIL PLANS FOR SITE DIMENSIONS, WHERE INCLUDED IN DRAWING PACKAGE. SUBMIT DIMENSIONED LAYOUT PLANS FOR ALL WORK PER SUBMITTAL REQUIREMENTS OF SPECIFICATION 16012. DO NOT START INSTALLATION UNTIL SUBMITTALS ARE REVIEWED BY ENGINEER.
15. REFER TO SPECIFICATION SECTION 16195 "ELECTRICAL IDENTIFICATION" FOR LABELING REQUIREMENTS. ALL CONDUITS, CONDUCTORS AND ENCLOSURES ARE TO BE LABELED IN ACCORDANCE TO SPECIFICATIONS.
16. EXISTING UNDERGROUND CONDUITS ARE LOCATED BY AVAILABLE DOCUMENTATION. FIELD VERIFY EXACT LOCATION.
17. ENTER LOW ON WALL AND PAINT TO MATCH EXISTING COLOR. SEAL CONDUIT ENTRY WATERTIGHT.
18. EXISTING AUTOMATIC TRANSFER SWITCH ENCLOSURE SHALL REMAIN AS JUNCTION BOX. AUTOMATIC TRANSFER SWITCH COMPONENTS ARE TO BE REMOVED AND EXISTING CONDUCTORS ARE TO BE BUTT SPLICED.
19. GENERATOR, ENCLOSURE, SUB-BASE TANK AND AUTOMATIC TRANSFER SWITCH PROVIDED BY OWNER SHALL BE INSTALLED BY CONTRACTOR.
20. REPAIR DAMAGE DONE TO CHAIN LINK FENCE TO EXISTING CONDITIONS.
21. LOCATE ENCLOSURE A MINIMUM OF TEN FEET FROM PROPERTY LINE OR OBJECTS.

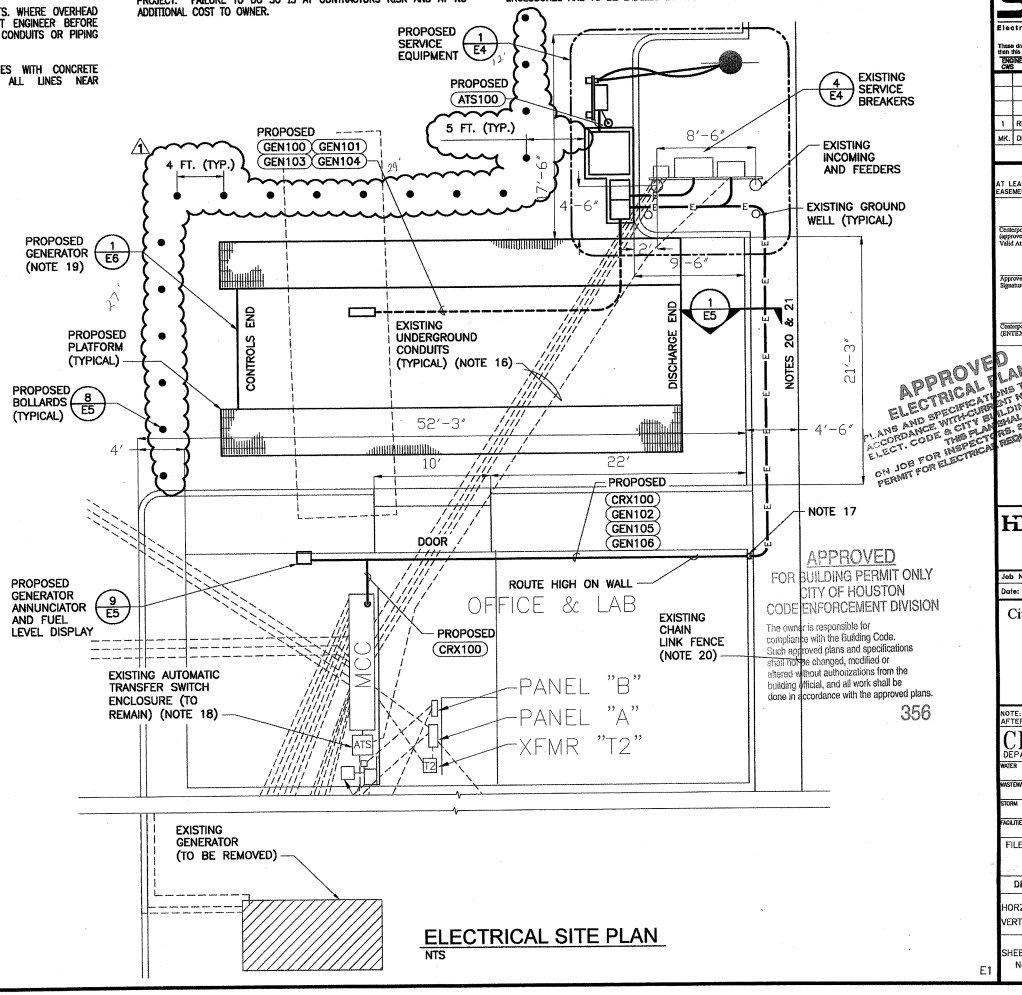

ELECTRICAL SITE PLAN
NTS

APPROVED
ELECTRICAL PLAN
PLANS AND SPECIFICATIONS TO BE IN ACCORDANCE WITH CURRENT NATIONAL ELECT. CODE & CITY BUILDING CODE. THIS PLAN SHALL BE KEPT ON JOB FOR INSPECTORS. SIGNED COPY OF PLANS SHALL BE REQUIRED FOR PERMIT FOR ELECTRICAL WORK.
CHRISTOPHER P. SHRADER 80269 LICENSED PROFESSIONAL ENGINEER
NO. 80269
STATE OF TEXAS
September 28, 2011
SHRADER ENGINEERING, INC.

APPROVED
FOR BUILDING PERMIT ONLY
CITY OF HOUSTON
CODE ENFORCEMENT DIVISION
The owner is responsible for compliance with the Building Code. Such approved plans and specifications shall not be changed, modified or altered without authorizations from the building official, and all work shall be done in accordance with the approved plans.
356

SHRADER ENGINEERING
Electrical • Mechanical • Informatics Technology
SHRADER ENGINEERING, INC. TBPE No. F-527
These drawings may not be copied or reproduced for purposes other than this project unless authorized in writing by Shrader Engineering, Inc. © 2011

ENGINEER: CWS	DESIGNED: LRS	CHECKED BY: CWS	DATE CHKD: Sep. 28, 11	DRAWN BY: RAM

MK.	DESCRIPTION	DATE	DWN.	CHK.
1	REVISION 1	9/28		

REVISIONS

PRIVATE UTILITY LINES SHOWN
AT LEAST 48 HOURS BEFORE EXCAVATING IN STREET R.O.W. OR EASEMENTS CALL THE LONE STAR NOTIFICATION 713-225-4067.

Date:
Centerpoint Energy/ Houston Lighting & Power Co.
(approved only for crossing underground ductlines, unless otherwise noted.)
Valid At Time Of Review Only

Date:
Approved for AT&T Texas/SBC underground conduit facilities only.
Signature valid for one year.

Date:
Centerpoint Energy/ ENTEX incorporated
(ENTEX service lines are not shown.)

HDR | CLAUNCH & MILLER
Engineering Consultants
4635 Southwest Freeway, Suite 1000 • Houston, Texas 77027
(713) 622-9264 • Fax (713) 622-9265 www.hdrinc.com
HDR Engineering Inc. Texas Reg. No. F-754

Job No.: IO-101	Dwn By:
Date: May, 2011	Chkd By:

City of West University Place, Texas
Standby Generator
for Wastewater Treatment Plant

ELECTRICAL SITE PLAN

NOTE: CITY SIGNATURES VALID FOR ONE YEAR ONLY AFTER DATE OF SIGNATURES

CITY OF HOUSTON
DEPARTMENT OF PUBLIC WORKS AND ENGINEERING

WATER	STREET & BRIDGE
WASTEWATER	TRAFFIC
STORM	STORM WATER QUALITY
FACILITIES	

FILE NO:

FOR CITY OF HOUSTON USE ONLY

DRAWING SCALE
HORZ : AS NOTED
VERT :

SHEET No: 4 OF 13

E1

Shrader-HDR

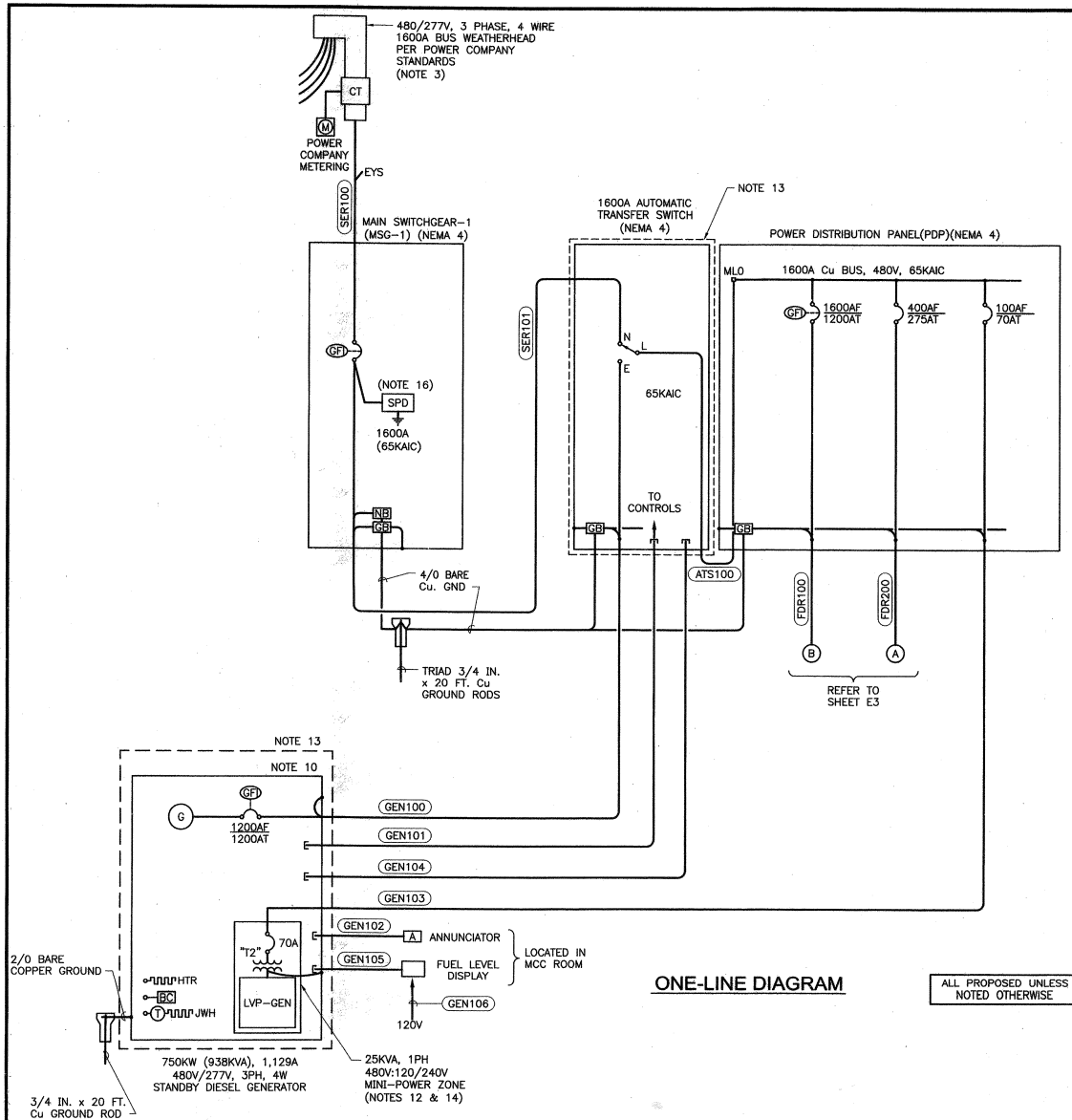

ONE-LINE DIAGRAM

ALL PROPOSED UNLESS NOTED OTHERWISE

NOTES:

1. EXISTING ONE-LINE IS TYPICAL AND MAY VARY. FIELD VERIFY EXISTING CONFIGURATION AND LOADS. SOME LOADS MAY NOT BE SHOWN.
2. PROVIDE ALL CONDUITS AND CONDUCTORS REQUIRED TO CONNECT NEW AUTOMATIC TRANSFER SWITCH TO SERVICE CONDUCTORS. REMOVE UNUSED CONDUIT AND CONDUCTORS.
3. INTERRUPT CAPACITY FOR ALL COMPONENTS SHALL BE SAME AS SERVICE.
4. ALL CIRCUIT BREAKER TRIP UNITS TO BE REMOVABLE BOLT ON TYPE.
5. ALL CONDUITS, CONDUCTORS AND DEVICES MAY NOT BE SHOWN ON THIS SHEET.
6. ALL OUTDOOR ENCLOSURES SHALL BE NEMA 4 PAINTED STEEL UNLESS NOTED OTHERWISE. ALL INDOOR SWITCHES OR BREAKER ENCLOSURE SHALL BE NEMA 1 UNLESS NOTED OTHERWISE.
7. PROVIDE TRANSFER SWITCH DATA TO POWER COMPANY.
8. ONLY ELECTRICAL CONTRACTORS LISTED IN SPECIFICATION 16012, 1.06, E, SHALL PERFORM ELECTRICAL CONSTRUCTION ON THIS PROJECT.
9. GENERATOR 3 POLE MAIN BREAKER WITH ADJUSTABLE TRIP RATING SHALL BE PROVIDED BY GENERATOR MANUFACTURER.
10. GENERATOR NEUTRAL SHALL BE BONDED TO SYSTEM GROUND.
11. VERIFY AVAILABLE FAULT CURRENT WITH POWER COMPANY AND PROVIDE EQUIPMENT RATED ACCORDINGLY.
12. GROUND TRANSFORMER TO GENERATOR FRAME.
13. GENERATOR, SUB-BASE TANK, ENCLOSURE AND AUTOMATIC TRANSFER SWITCH WILL BE PROVIDED BY OWNER AND INSTALLED BY CONTRACTOR UNDER THIS CONTRACT.
14. MINI-POWER ZONE IS PROVIDED BY CONTRACTOR AND INSTALLED IN GENERATOR ENCLOSURE.
15. GENERATOR IS SIZED TO RUN ENTIRE PLANT EXCEPT 1 - 200 HP BLOWER AND 1 - 60 HP LIFT PUMP. PROVIDE INHIBIT RELAYS AS SHOWN ON SHEET E3.
16. REFER TO SPECIFICATION 16290.

ELECTRICAL LOAD ANALYSIS

LOAD		AMPS ø A	ø B	ø C
EXISTING LOADS				
BLOWERS	3-200HP	720	720	720
LIFT PUMP NO. 1	1-60HP	77	77	77
TRANSFORMER "T2"	1-75KVA	91	91	91
CLARIFIERS	2-1/2HP	2	2	2
TRANSFER PUMPS	2-2HP	7	7	7
THICKENER	1-1/2HP	1	1	1
AIR COMPRESSOR		8	8	8
CABLE REEL		24	24	24
BELT PRESS CONTROL PANEL	2	100	100	100
SUB TOTAL - MCC FEEDER		1030	1030	1030
LIFT PUMP NO. 2	1-60HP	77	77	77
TRANSFORMER "T1"	1-75KVA	91	91	91
SUB TOTAL - MISC. FEEDER		168	168	168
PROPOSED LOADS				
MINI-POWER ZONE	1-25KVA	52	-	52
25% OF LARGEST MOTOR		60	60	60
TOTAL LOAD		1310	1258	1310
SERVICE AMPACITY @ 480/277V, 3PH, 4W		1600	1600	1600
SPARE AMPACITY		290	342	290
GENERATOR LOAD (NOTE 15)		993	941	993
GENERATOR AMPACITY		1129	1129	1129

CALCULATED MAXIMUM AVAILABLE FAULT CURRENT = 57,221 AMPS. USE 65 KAIC RATED DEVICES AND BRACING (NOTE 11)

APPROVED
ELECTRICAL PLANS
PLANS AND SPECIFICATIONS SUBMITTED IN ACCORDANCE WITH CURRENT CITY BUILDING AND ELECT. CODE ORDINANCES. THIS PLAN SHALL BE POSTED ON JOB FOR INSPECTORS. SEPARATE PERMIT FOR ELECTRICAL REQUIRED.
STATE OF TEXAS
MICHAEL SHRADER P.E.
68959
LICENSED
PROFESSIONAL
ENGINEER
NO. 389
May 16, 2011
SHRADER ENGINEERING, INC.

SHRADER ENGINEERING
Electrical • Mechanical • Information Technology
SHRADER ENGINEERING, INC. TBPE No. F-527
These drawings may not be copied or reproduced for purposes other than this project unless authorized in writing by Shrader Engineering, inc. © 2011

ENGINEER: CWC	DESIGNED: LWS	DRAWN: LWS	CHECKED BY/DATE: CWC, 16May, 16, 11 15AM	DRAWN BY:

MK.	DESCRIPTION	DATE	DWN.	CHK.

REVISIONS

PRIVATE UTILITY LINES SHOWN
AT LEAST 48 HOURS BEFORE EXCAVATING IN STREET R.O.W. OR EASEMENTS CALL THE LONE STAR NOTIFICATION 713-223-4567.

Centerpoint Energy/ Houston Lighting & Power Co. (approved only for crossing underground facilities, unless otherwise noted.) Valid At Time Of Review Only — Date:

Approved for AT&T Texas/SBC underground conduit facilities only. Signature valid for one year. — Date:

Centerpoint Energy/ ENTEX Incorporated (ENTEX service lines are not shown.) — Date:

HDR | CLAUNCH & MILLER
Engineering Consultants
4635 Southwest Freeway, Suite 1000• Houston, Texas 77027
(713) 622-9264 • Fax (713) 622-9265 www.hdrinc.com
HDR Engineering Inc. Texas Reg. No. F-754

Job No.: 10-101	Dwn By:
Date: May, 2011	Chkd By:

City of West University Place, Texas
Standby Generator
for Wastewater Treatment Plant
ELECTRICAL
PROPOSED ONE-LINE
DIAGRAM

NOTE: CITY SIGNATURES VALID FOR ONE YEAR ONLY AFTER DATE OF SIGNATURES

CITY OF HOUSTON
DEPARTMENT OF PUBLIC WORKS AND ENGINEERING

WATER — STREETS — TRAFFIC — STORM WATER SEWERS — FACILITIES

FILE NO:

DRAWING SCALE
HORZ : N/A
VERT :

FOR CITY OF HOUSTON USE ONLY
ACCEPTED AND FILED
48433

SHEET No: 5 OF 16

E2

NOTES:

1. EXISTING ENCLOSURES ARE TO REMAIN AS J-BOXES.
2. EXTEND EXISTING CONDUCTORS AS REQUIRED FOR BUTT SPLICES.

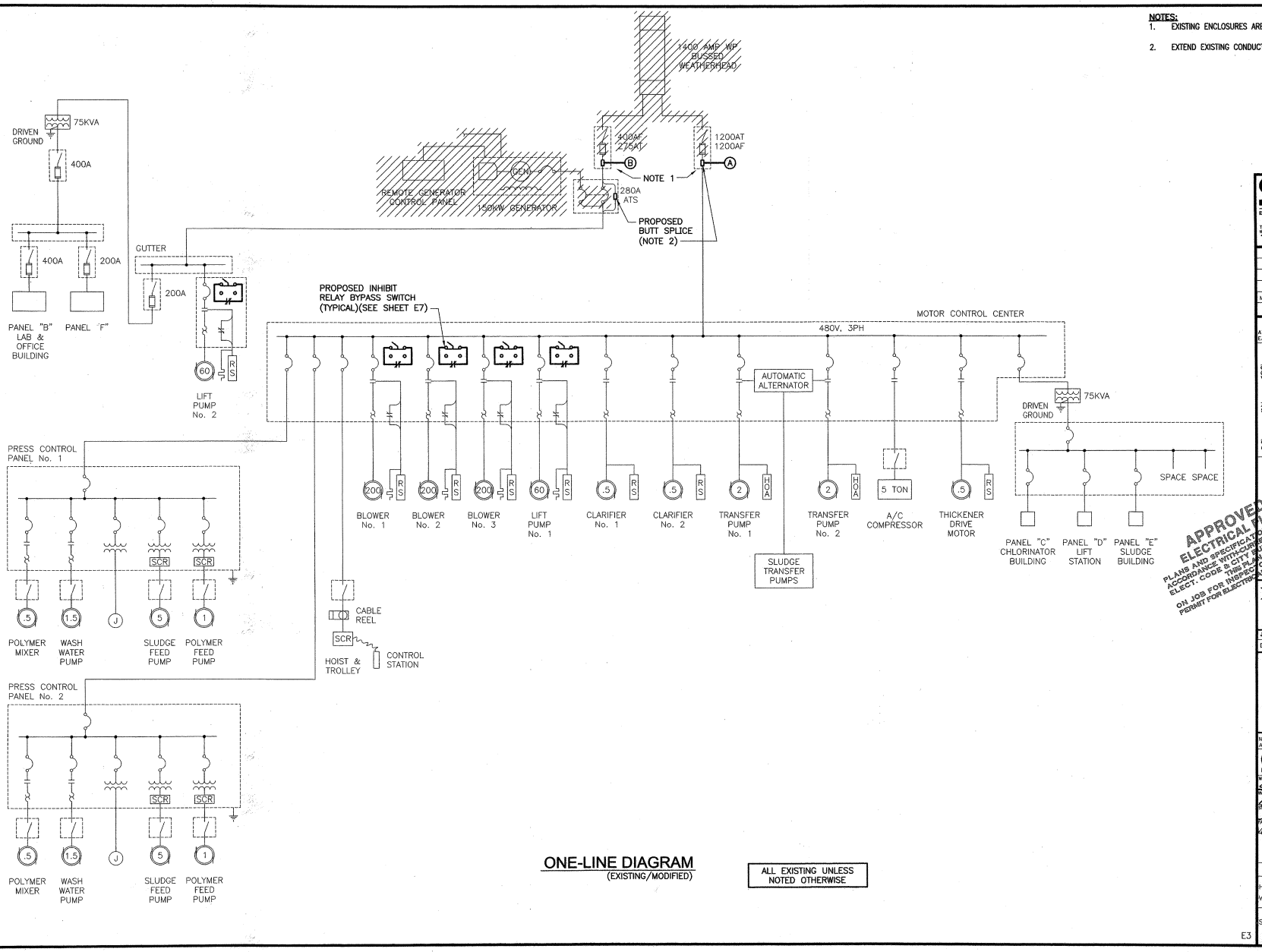

ONE-LINE DIAGRAM
(EXISTING/MODIFIED)

ALL EXISTING UNLESS NOTED OTHERWISE

SHRADER ENGINEERING

Electrical • Mechanical • Information Technology

SHRADER ENGINEERING, INC. TBPE No. F-527

These drawings may not be copied or reproduced for purposes other than this project unless authorized in writing by Shrader Engineering, Inc. © 2011

ENGINEER:	DESIGNER:	CHECKED BY:	DATE CHKD.:	DRAWN BY:
CWS	JRB	CWS	May, 16, 11	SJJ

MK.	DESCRIPTION	DATE	DWN.	CHK.

REVISIONS

PRIVATE UTILITY LINES SHOWN

AT LEAST 48 HOURS BEFORE EXCAVATING IN STREET R.O.W. OR EASEMENTS CALL THE LONE STAR NOTIFICATION 713-223-4567.

Date:

Centerpoint Energy/ Houston Lighting & Power Co. (approved only for creating underground ductlines, unless otherwise noted.) Valid At Time Of Review Only

Date:

Approved for AT&T Texas/SBC underground conduit facilities only. Signature valid for one year.

Date:

Centerpoint Energy/ ENTEX Incorporated (ENTEX service lines are not shown.)

APPROVED ELECTRICAL PLAN
PLANS AND SPECIFICATIONS TO BE IN ACCORDANCE WITH CURRENT NATIONAL ELECT. CODE & CITY BUILDING CODE. THIS PLAN SHALL BE KEPT ON JOB FOR INSPECTORS. SEPARATE PERMIT FOR ELECTRICAL REQUIRED.

STATE OF TEXAS
SHRADER, P.E.
40269
REGISTERED PROFESSIONAL ENGINEER
NO. 389

May 16, 2011
SHRADER ENGINEERING, INC.

HDR | CLAUNCH & MILLER
Engineering Consultants

4635 Southwest Freeway, Suite 1000• Houston, Texas 77027
(713) 622-9264• Fax (713) 622-9265 www.hdrinc.com
HDR Engineering Inc. Texas Reg. No. F-754

Job No.: 10-101	Dwn By:
Date: May, 2011	Chkd By:

City of West University Place, Texas
Standby Generator
for Wastewater Treatment Plant
ELECTRICAL
EXISTING ONE-LINE
DIAGRAM

NOTE: CITY SIGNATURES VALID FOR ONE YEAR ONLY AFTER DATE OF SIGNATURES

CITY OF HOUSTON
DEPARTMENT OF PUBLIC WORKS AND ENGINEERING

WATER 6-30-11 | STREET OF SIGNS 6-30-11
WASTEWATER 6-30-11 | TRAFFIC 6-30-11
STORM 6.30.11 | STORM WATER QUALITY 6-30-11
FACILITIES 6/30/11

FILE NO:

FOR CITY OF HOUSTON USE ONLY

PUBLIC WORKS AND ENGINEERING
ACCEPTED AND FILED
48433
CITY SECRETARY NUMBER
HOUSTON, TEXAS

DRAWING SCALE

HORZ : N/A
VERT :

SHEET No: 6 OF 16

E3

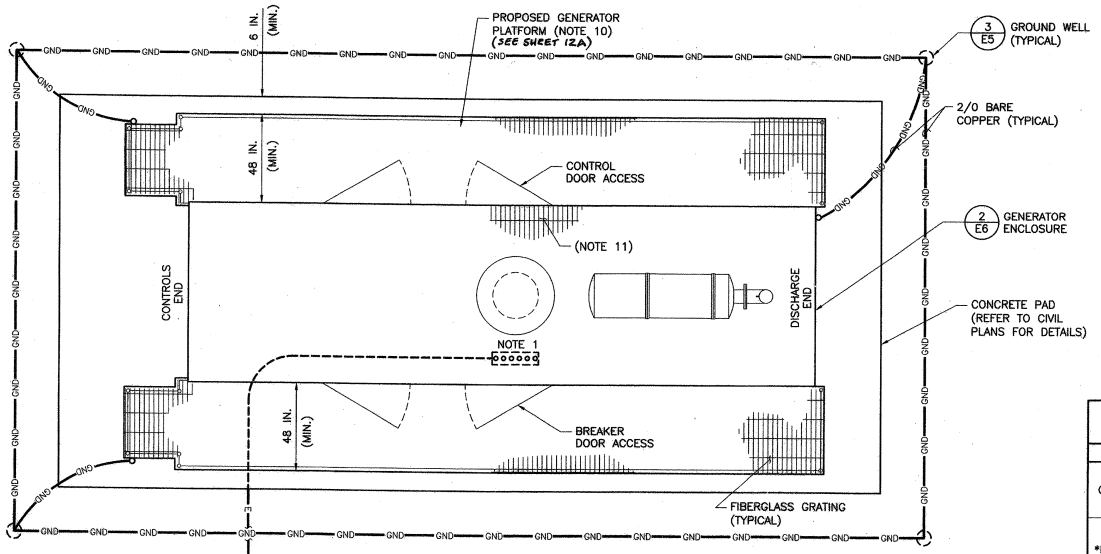

GENERATOR PLAN VIEW (NOTE 11) 1 E1

NTS

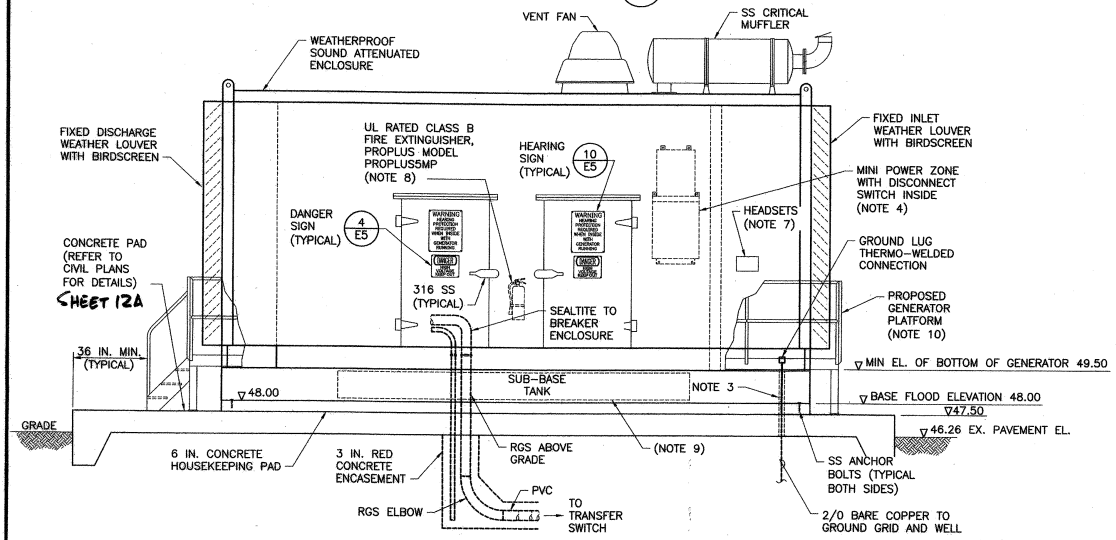

SOUND ATTENUATION GENERATOR ENCLOSURE DETAIL (NOTE 11 & 12) 2 E6

NTS

NOTES:

1. COORDINATE CONDUIT LOCATIONS WITH GENERATOR MANUFACTURER.
2. COORDINATE GENERATOR ENCLOSURE DIMENSIONS AND ADJUST SLAB SIZE ACCORDINGLY PRIOR TO CONSTRUCTION.
3. DO NOT ROUTE GROUND CONDUCTORS ACROSS TOP OF SLAB INSIDE OR OUTSIDE ENCLOSURE. INSTALL IN SCH. 80 PVC SLEEVE IN SLAB.
4. PROVIDE 48 INCH MINIMUM WORKSPACE IN FRONT OF ELECTRICAL EQUIPMENT.
5. ALL HARDWARE TO BE 316 STAINLESS STEEL.
6. CONDUCTING GENERATOR TESTS, SET MOTOR STARTER TIME DELAY RELAYS IN THE ORDER OF MOTOR SIZE SMALLEST TO LARGEST, WITH FIRST SETTING AT 10 SECONDS AND EACH CONSECUTIVE TIME DELAY AT 10 SECOND GREATER INCREMENTS. I.E. M1 TD = 10 SEC; M2 TD = 20 SEC, M3 TD = 30 SEC., ETC. THESE SETTINGS SHOULD NEVER BE CHANGED TO ASSURE PROPER LOAD SEQUENCING ON GENERATOR. RECORD SETTINGS. INCLUDE IN AS-BUILTS.
7. PROVIDE TWO SETS OF OSHA APPROVED HEADSETS FOR NOISE REDUCTION WHEN SERVICING GENERATOR. PROVIDE LOCKABLE WEATHERPROOF ENCLOSURE OUTSIDE GENERATOR.
8. PROVIDE FIRE EXTINGUISHER RATED FOR FUEL TYPE, PER GENERATOR MANUFACTURERS RECOMMENDATIONS. FIELD LOCATE.
9. GENERATOR, SUB-BASE TANK, AND SOUND ATTENUATING ENCLOSURE WILL BE PURCHASED BY OWNER AND INSTALLED BY CONTRACTOR.
10. SUBMIT SHOP DRAWINGS FOR ENGINEER'S REVIEW.
11. PROVIDE FIBERGLASS GRATING INSIDE SOUND ATTENUATING ENCLOSURE SO THAT THERE ARE NO TRIP HAZARDS PRESENT. ACCESS PLATFORM AND GRATING IN GENERATOR ENCLOSURE ARE TO BE LEVEL.
12. PROVIDE STAINLESS STEEL ANCHORS TO CONCRETE BASE.

GENERATOR & TANK DATA (NOTE 9)

ITEMS	DATA
GENERATOR	750KW, 938KVA, 1,129A (MIN.) DIESEL, 480/277V, 3PH FULL LOAD 52.7 GPH, HALF LOAD 27.1 GPH WT = 15,363 LBS.
*ENCLOSURE	SOUND ATTENUATING ENCLOSURE 68dB @ NON-RESIDENTIAL PROPERTY LINE IN CITY OF HOUSTON OR ETJ WT = 11,823 LBS DIM. 457 IN. L X 124 IN. W X 180 IN. H
*SUB-BASE TANK	2,000 GALLON (MIN.)
NFPA 110	CLASS 48, TYPE 10, LEVEL 2
AVAILABLE RUN TIME = (AT 3/4 LOAD)	2,000 GAL / 39.8 GAL/HR = 50.25 HRS > 48 HRS

*VERIFY EQUIPMENT PARAMETERS WITH SPECIFIC MANUFACTURER

APPROVED
FOR BUILDING PERMIT ONLY
CITY OF HOUSTON
CODE ENFORCEMENT DIVISION

The owner is responsible for compliance with the Building Code. Such approved plans and specifications shall not be changed, modified or altered without authorizations from the building official, and all work shall be done in accordance with the approved plans.

356

APPROVED
ELECTRICAL PLAN
PLANS AND SPECIFICATIONS TO BE IN ACCORDANCE WITH CURRENT NATIONAL ELECT. CODE & CITY BUILDING CODE
ON JOB FOR INSPECTORS. THIS PLAN SHALL BE KEPT SEPARATE FROM PERMIT FOR ELECTRICAL REQUIRED.
NO. 356

SHRADER ENGINEERING
Electrical • Mechanical • Information Technology
SHRADER ENGINEERING, INC. TBPE No. F-527
These drawings may not be copied or reproduced for purposes other than this project unless authorized in writing by Shrader Engineering, Inc. © 2011

ENGINEER: CWC	LSR	DESIGNED: LSR	DRAWN BY: CWC	CHECKED BY: CWC	DATE: May. 16, 11	SCALE: NTS

MK.	DESCRIPTION	DATE	DWN.	CHK.

REVISIONS

PRIVATE UTILITY LINES SHOWN
AT LEAST 48 HOURS BEFORE EXCAVATING IN STREET R.O.W. OR EASEMENTS CALL THE LONE STAR NOTIFICATION 713-223-4567.

Date:
Centerpoint Energy/ Houston Lighting & Power Co.
(Approved only for crossing underground facilities, unless otherwise noted.)
Valid At Time Of Review Only

Date:
Approved for AT&T Texas/SBC underground conduit facilities only.
Signature valid for one year.

Date:
Centerpoint Energy/ ENTEX Incorporated
(ENTEX service lines are not shown.)

STATE OF TEXAS
CHAL SHRADER, P.E.
40269
REGISTERED PROFESSIONAL ENGINEER
May 16, 2011
SHRADER ENGINEERING, INC.

HDR | CLAUNCH & MILLER
Engineering Consultants
4635 Southwest Freeway, Suite 1000• Houston, Texas 77027
(713) 622-9264• Fax (713) 622-9265 www.hdrinc.com
HDR Engineering Inc. Texas Reg. No. F-754

Job No.: 10-101	Dwn By:
Date: May, 2011	Chkd By:

City of West University Place, Texas
Standby Generator
for Wastewater Treatment Plant

ELECTRICAL
GENERATOR DETAILS

NOTE: CITY SIGNATURES VALID FOR ONE YEAR ONLY AFTER DATE OF SIGNATURES

CITY OF HOUSTON
DEPARTMENT OF PUBLIC WORKS AND ENGINEERING

WATER
WASTEWATER
DRAINAGE
TRANSPORTATION
ACCEPTED

FILE NO:
DRAWING SCALE
HORZ : NTS
VERT :

FOR CITY OF HOUSTON USE ONLY
PUBLIC WORKS & ENGINEERING
ACCEPTED AND FILED
48433
CITY SECRETARY
HOUSTON, TEXAS

SHEET No: 9 OF 16

E6

SUPERSEDED BY SHEET 12A

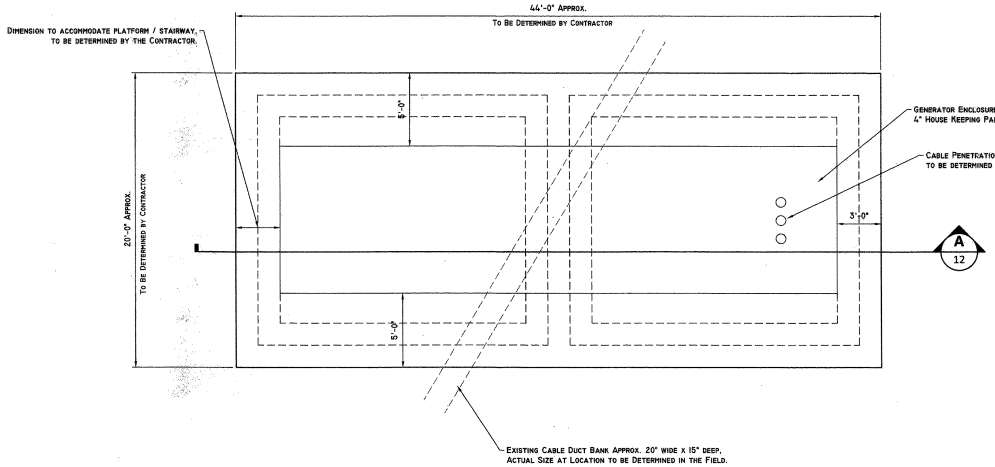

1 Generator Pad Foundation Plan
Scale: 3/4" = 1'-0"

APPROVED
FOR BUILDING PERMIT ONLY
CITY OF HOUSTON
CODE ENFORCEMENT DIVISION
This owner is responsible for compliance with the Building Code. Such approved plans and specifications shall not be changed, modified or altered without authorizations from the building official, and all work shall be done in accordance with the approved plans.
356

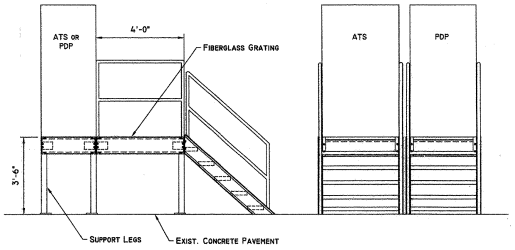

B Section
Scale: 3/8"=1'-0"

D End View
Scale: 3/8"=1'-0"

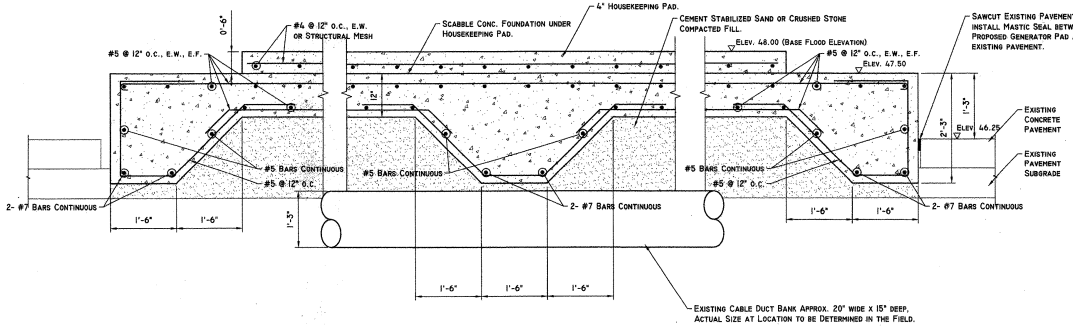

A Section
Scale: 3/4" = 1'-0"

1. CONTRACTOR TO DESIGN SUPPORT PLATFORM TO PROVIDE ADEQUATE SUPPORT FOR EQUIPMENT AND ACCESS. TO MEET OSHA STANDARDS.
2. SUBMIT SHOP DRAWINGS FOR ENGINEER'S REVIEW.
3. TO BE HOT DIP GALVANIZED AFTER FABRICATION.
4. PROVIDE 316 STAINLESS STEEL ANCHORS TO EXISTING CONCRETE PAVEMENT.

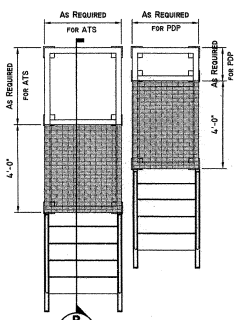

C Plan View
Scale: 3/8"=1'-0"

2 ATS & PDP Support and Access Structure
Scale: 3/8"=1'-0"

MK.	DESCRIPTION	DATE	DWN.	CHK.

REVISIONS

PRIVATE UTILITY LINES SHOWN
AT LEAST 48 HOURS BEFORE EXCAVATING IN STREET R.O.W. OR EASEMENTS CALL THE LONE STAR NOTIFICATION 713-223-4567.

Date:
Centerpoint Energy/ Houston Lighting & Power Co.
(approved only for crossing underground ductlines, unless otherwise noted.)
Valid At Time Of Review Only

Date:
Approved for AT&T Texas/SBC underground conduit facilities only.
Signature valid for one year.

Date:
Centerpoint Energy/ ENTEX Incorporated
(ENTEX service lines are not shown.)

STATE OF TEXAS
STEPHEN RATCLIFFE
85731
REGISTERED PROFESSIONAL ENGINEER
5/9/11

HDR | CLAUNCH & MILLER
Engineering Consultants
4635 Southwest Freeway, Suite 1000 • Houston, Texas 77027
(713) 622-9264 • Fax (713) 622-9265 www.hdrinc.com
HDR Engineering, Inc. Texas Reg. No. F-754

Job No.: 10-101	Dwn By:
Date: May, 2011	Chkd By:

City of West University Place, Texas
Standby Generator
for Wastewater Treatment Plant

FOUNDATION DETAILS

NOTE: CITY SIGNATURES VALID FOR ONE YEAR ONLY AFTER DATE OF SIGNATURES

CITY OF HOUSTON
DEPARTMENT OF PUBLIC WORKS AND ENGINEERING
WATER
WASTEWATER
STORM
FACILITIES
STORM WATER QUALITY
Revised Mark 6/30/11

FILE NO:

FOR CITY OF HOUSTON USE ONLY
ACCEPTED AND FILED
48433

DRAWING SCALE
HORZ :
VERT :

SHEET No: 12 OF 16

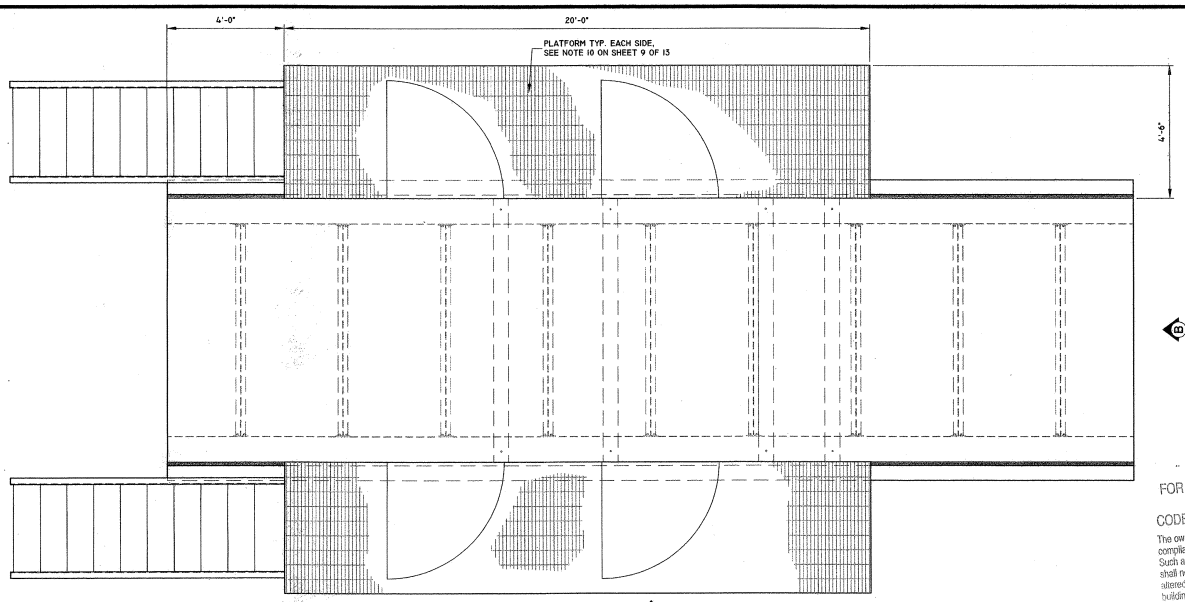

1 **Generator Pad Platform Plan**
Scale: 1/2" = 1'-0"

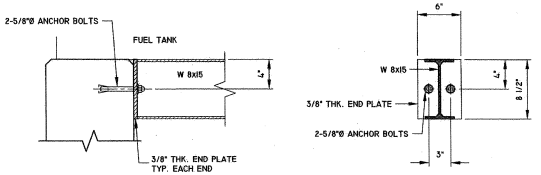

2 **Support Beam Connection**
Scale: 1 1/2" = 1'-0"

APPROVED
FOR BUILDING PERMIT ONLY
CITY OF HOUSTON
CODE ENFORCEMENT DIVISION
The owner is responsible for compliance with the Building Code. Such approved plans and specifications shall not be changed, modified or altered without authorizations from the building official, and all work shall be done in accordance with the approved plans.
356

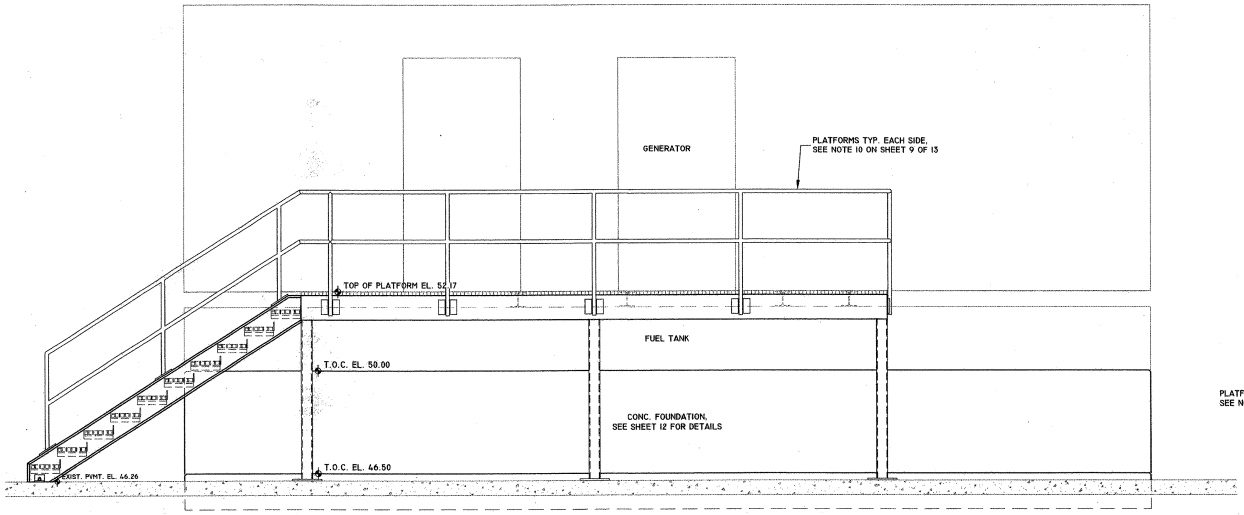

A **Elevation**
Scale: 1/2"=1'-0"

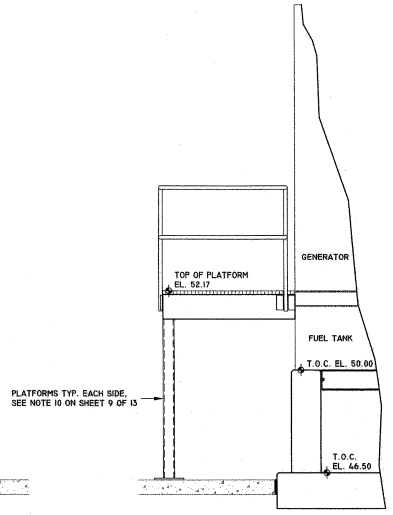

B **Elevation**
Scale: 1/2"=1'-0"

MK.	DESCRIPTION	DATE	DWN.	CHK.

REVISIONS

PRIVATE UTILITY LINES SHOWN
AT LEAST 48 HOURS BEFORE EXCAVATING IN STREET R.O.W. OR EASEMENTS CALL THE LONE STAR NOTIFICATION 713-223-4567.

Date:
Centerpoint Energy/ Houston Lighting & Power Co.
(approved only for crossing underground facilities, unless otherwise noted.)
Valid At Time Of Review Only

Date:
Approved for AT&T Texas/SBC underground conduit facilities only.
Signature valid for one year.

Date:
Centerpoint Energy/ ENTEX Incorporated
(ENTEX service lines are not shown.)

STATE OF TEXAS
STEPHEN RATCLIFFE
80731
LICENSED
PROFESSIONAL ENGINEER
8/1/11

HDR | CLAUNCH & MILLER
Engineering Consultants
4635 Southwest Freeway, Suite 1000 • Houston, Texas 77027
(713) 622-9264 • Fax (713) 622-9265 www.hdrinc.com
HDR Engineering Inc. Texas Reg. No. F-754

Job No.: 10-101	Dwn By: Chudoba
Date: May, 2011	Chkd. By: Ratcliffe

City of West University Place, Texas
Standby Generator
for Wastewater Treatment Plant

FOUNDATION DETAILS

NOTE: CITY SIGNATURES VALID FOR ONE YEAR ONLY AFTER DATE OF SIGNATURES

CITY OF HOUSTON
DEPARTMENT OF PUBLIC WORKS AND ENGINEERING

1 AMEER 8-4-11	2 PARKS & RIDGE 8-4-11
3 WASTEWATER 8-4-11	4 TRAFFIC & TRANSPORTATION 8-4-11
5 STORM 8-4-11	6 STORM WATER QUALITY 8-4-11
7 FACILITIES 8-4-11	

FILE NO:

DRAWING SCALE
HORZ :
VERT :

SHEET No: 128 OF 16

FOR CITY OF HOUSTON USE ONLY
PUBLIC WORKS AND ENGINEERING
ACCEPTED AND FILED
48433
CITY SECRETARY
HOUSTON, TEXAS

THE CITY OF WEST UNIVERSITY PLACE
(2) 75'-0" DIA, H40A-LT CIRCULAR SCRAPER CLARIFIERS
FOR (2) EXISTING BASINS
WEST UNIVERSITY PLACE, TX.

DRAWING NO	REV	DESCRIPTION
46041-100	0	GENERAL ARRANGEMENT - COVER SHEET & DRAWING LIST
46041-101	0	GENERAL ARRANGEMENT - PLAN & ELEVATION VIEW
46041-102	0	GENERAL ARRANGEMENT - SECTION & DETAIL VIEWS
46041-103	0	GENERAL ARRANGEMENT - CENTER PIER DETAILS
46041-104	0	GENERAL ARRANGEMENT - SPECIFICATION SHEET

ORIGINAL CLARIFIER EQUIPMENT WAS SUPPLIED BY ENVIREX, ORDER H115932-01 (1982)

EVOQUA PROJECT 2033/000845 (46041) IS FOR MAJOR REPLACEMENT OF CLARIFIER NO. 1 AND CLARIFIER NO. 2 COMPONENTS AS DESCRIBED ON DRAWINGS 46041-100 THRU 46041-104 WITH RE-USE OF EXISTING BRIDGE, HANDRAILING, GRATING, SCUM TROUGH AND RELATED SCUM TROUGH SUPPORTS.

FOR RECORD ONLY

DIMENSIONS IN INCHES UNLESS SPECIFIED
TOLERANCES UNLESS OTHERWISE SPECIFIED
TWO (2) PLACE DEC. ±.05
THREE (3) PLACE DEC. ±.005
ANGULAR ±.50°
STRUCTURAL DIMENSIONS ± 1/16
MACHINED SURFACES 250/

REV	DESCRIPTION	DATE	DWN	CHKD	APVD	ECN

COMPANY CONFIDENTIAL
DOCUMENT AND ALL INFORMATION CONTAINED HEREIN ARE THE PROPERTY OF EVOQUA AND/OR ITS AFFILIATES. THE DESIGN CONCEPTS AND INFORMATION CONTAINED HEREIN ARE PROPRIETARY TO EVOQUA AND ARE SUBMITTED IN CONFIDENCE. THEY ARE NOT TRANSFERABLE AND MUST BE USED ONLY FOR THE PURPOSE FOR WHICH THE DOCUMENT IS EXPRESSLY LOANED. THEY MUST NOT BE DISCLOSED, REPRODUCED, LOANED OR USED IN ANY OTHER MANNER WITHOUT THE EXPRESS WRITTEN CONSENT OF EVOQUA. IN NO EVENT SHALL THEY BE USED IN ANY MANNER DETRIMENTAL TO THE INTEREST OF EVOQUA. ALL PATENT RIGHTS ARE RESERVED. UPON THE DEMAND OF EVOQUA, THIS DOCUMENT, ALONG WITH ALL COPIES AND EXTRACTS, AND ALL RELATED NOTES AND ANALYSES, MUST BE RETURNED TO EVOQUA OR DESTROYED, AS RESTRICTED BY EVOQUA. ACCEPTANCE OF THE DELIVERY OF THIS DOCUMENT CONSTITUTES AGREEMENT TO THESE TERMS.

DESIGNER	MARSH	DATE 2/28/17
CHECKER	JRM	DATE 2/28/17
ENGINEER		DATE
MANAGER	CHLORE	DATE 2/28/17
FILE:	NEW	
SCALE:	NA	

TITLE GENERAL ARRANGEMENT-COVER SHEET & DRAWING LIST (2) 75'-0" DIA. H40A-LT CIRCULAR SCRAPER CLARIFIERS CW ROTATION

CLIENT THE CITY OF WEST UNIVERSITY PLACE, TX.

evoqua WATER TECHNOLOGIES
WATER TECHNOLOGIES
WAUKESHA, WI
262-547-0141

PROJECT	CODE	DRAWING	SHEET	REV
2033/000845	4002	46041-100	1 OF 1	0

STD: BORDER-0106-24X36D1 | INTL REF: | 02/28/2017 - 10:15 AM | BAR = 1" AT PLOT SCALE

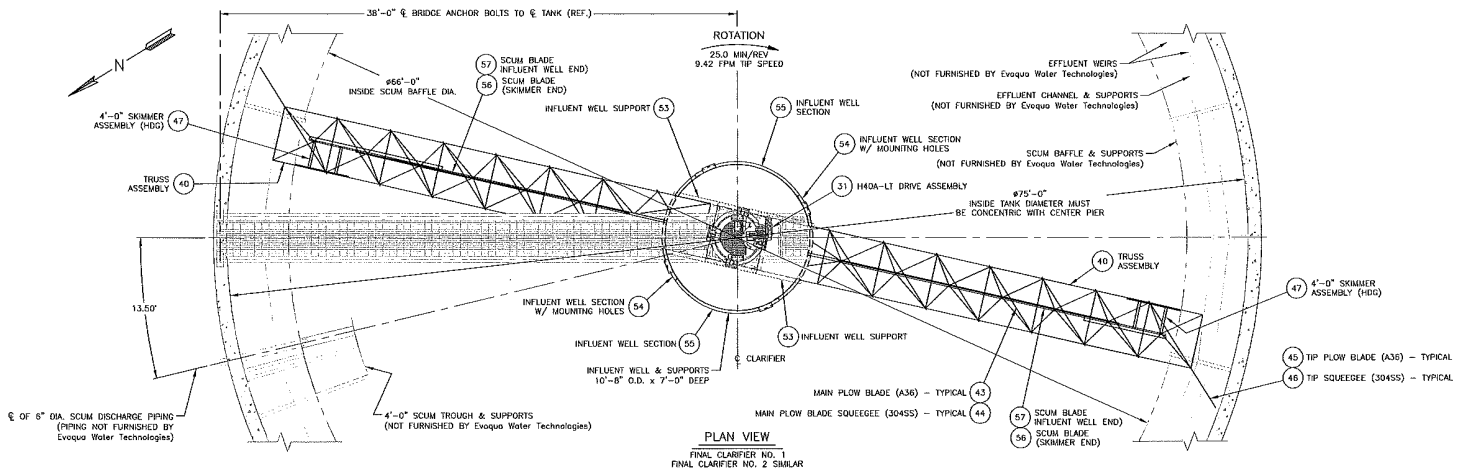

PLAN VIEW

FINAL CLARIFIER NO. 1
FINAL CLARIFIER NO. 2 SIMILAR

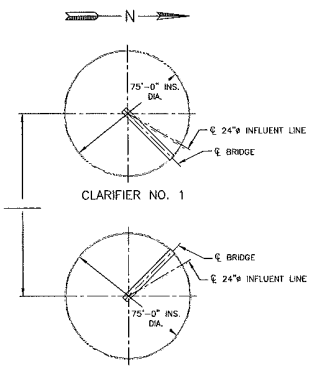

KEY PLAN – CLARIFIERS

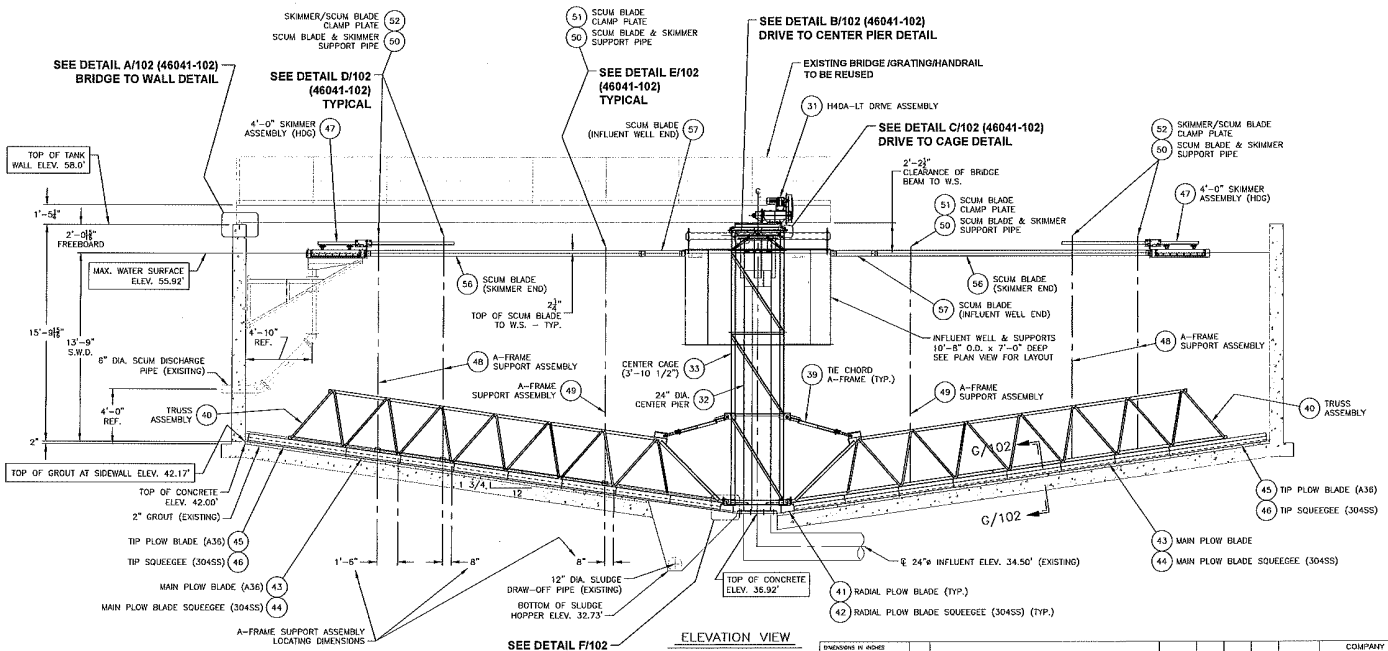

ELEVATION VIEW

FIELD MATERIAL LIST:

REFERENCE DRAWING 46041-106, BILL OF MATERIAL ITEM 61 FOR FIELD INSTALLATION HARDWARE AND ASSEMBLY VIEWS.

IMPORTANT NOTE:

IF THE CENTER PIER IS NOT PLUMB TO WITHIN 1/16 INCH (1.5mm), THE REMAINDER OF THE ROTATING EQUIPMENT AND THE DRIVE WILL NOT FUNCTION PROPERLY. SEE THE O&M MANUAL FOR DETAILED INSTRUCTIONS ON "PLUMBING THE CENTER PIER".

DOUBLE CHECK THE PIER FOR PLUMBNESS BEFORE PLACING THE GROUT UNDER THE BASE FLANGE.

ORIGINAL CLARIFIER EQUIPMENT WAS SUPPLIED BY ENVIREX, ORDER H115932-01 (1982)

EVOQUA PROJECT 2033/000845 (46041) IS FOR MAJOR REPLACEMENT OF CLARIFIER NO. 1 AND CLARIFIER NO. 2 COMPONENTS AS DESCRIBED ON DRAWINGS 46041-100 THRU 46041-104 WITH RE-USE OF EXISTING BRIDGE, HANDRAILING, GRATING, SCUM TROUGH AND RELATED SCUM TROUGH SUPPORTS.

BOXED DIMENSIONS REFER TO CRITICAL ELEVATIONS OF THE CLARIFIER DESIGN. FIELD MEASUREMENTS OR CONFIRMATION DID NOT OCCUR FOR THIS PROJECT.

ORIGINAL EQUIPMENT WAS DESIGNED AND SUPPLIED BY ENVIREX, WITH NO DOCUMENTED OR OBSERVED CHANGES TO THE ORIGINAL INSTALLATION

FOR RECORD ONLY

DIMENSIONS IN INCHES UNLESS SPECIFIED
TOLERANCES UNLESS OTHERWISE SPECIFIED
TWO (2) PLACE DEC. ±.05 THREE (3) PLACE DEC. ±.005 ANGULAR ±.50'
STRUCTURAL DIMENSIONS ± 1/16
MACHINED SURFACES

REV	DESCRIPTION	DATE	DWN	CHKD	APVD	ECN

COMPANY CONFIDENTIAL
DOCUMENT AND ALL INFORMATION CONTAINED HEREIN ARE THE PROPERTY OF EVOQUA and/or AFFILIATES. ANY REPRODUCTION OR DISTRIBUTION CONTAINED HEREIN ARE PROPRIETARY TO EVOQUA AND ARE SUBMITTED IN CONFIDENCE. THEY ARE NOT TRANSFERABLE AND MUST BE USED ONLY FOR THE PURPOSE FOR WHICH THE DOCUMENT IS EXPRESSLY SUBMITTED. THEY MUST NOT BE COPIED OR REPRODUCED, SHARED OR USED IN ANY OTHER MANNER WITHOUT THE EXPRESS WRITTEN CONSENT OF EVOQUA. IN NO EVENT SHALL THEY BE USED IN ANY MANNER DETRIMENTAL TO THE INTEREST OF EVOQUA. BY ACCEPTANCE OF THIS DRAWING, YOU AGREE THAT THIS DRAWING OR ANY OTHER DOCUMENTS ALONG WITH ALL COPIES AND EXTRACTS, AND ALL RELATED NOTES AND ANALYSES, MUST BE RETURNED TO EVOQUA OR DESTROYED, AS INSTRUCTED BY EVOQUA, ACCEPTANCE OF THE DELIVERY OF THIS DOCUMENT CONSTITUTES AGREEMENT TO THESE TERMS.

DESIGNER		DATE
MRSH		2/28/17
CHECKER		DATE
JRM		2/28/17
ENGINEER		DATE
MANAGER		DATE
CHLORE		2/28/17
FILE:		
SCALE: 1 : 48		

TITLE: GENERAL ARRANGEMENT–PLAN & ELEVATION (2) 75'–0" DIA. H40A–LT CIRCULAR SCRAPER CLARIFIERS CW ROTATION

CLIENT: THE CITY OF WEST UNIVERSITY PLACE, TX.

evoqua WATER TECHNOLOGIES — WAUKESHA, WI 262-547-0141

PROJECT	CODE	DRAWING	SHEET	REV
2033/000845	4002	46041-101	1 OF 1	0

STD: BORDER-D10S-24X36D1 | INTL REF: | 02/28/2017 - 10:16 AM | BAR = 1" AT PLOT SCALE

Appendix B: IDS Flood Study

IDS Engineering Group

13430 Northwest Freeway, Suite 700, Houston, Texas 77040
TBPE F-2726 | TBPLS 10110700
t 713.462.3178
idseg.com

FINAL ENGINEERING REPORT

Wastewater Treatment Plant Flood Resiliency Study

CITY OF WEST UNIVERSITY PLACE



IDS Project No. 2348-001-03

October 2020

50 YEARS 1970-2020

TABLE OF CONTENTS

TABLE OF CONTENTS ..... **i**

I. PURPOSE **1**

II. BACKGROUND **1**

III. LOCATION **2**

IV. EXISTING CONDITIONS **2**

V. REGULATORY ANALYSIS **2**

VI. REVIEW OF HISTORICAL FLOOD DATA **3**

VII. SUMMARY OF CRITICAL FACILITIES AND CRITICAL ELEVATIONS **4**

VIII. RECOMMENDATIONS **5**

TABLES/EXHIBITS

(A) EXISTING WASTEWATER TREATMENT PLANT SITE LOCATION

(B) FEMA FLOODPLAIN DOCUMENTATION

1) FLOODPLAIN MAP FOR SITE

2) FIS PROFILE OF BRAYS BAYOU NEAR SITE

(C) SURVEY OF WASTEWATER TREATMENT PLANT SITE

(D) JURISDICTIONAL REGULATORY AGENCY CRITERIA

1) TCEQ RELEVANT FLOODPLAIN CRITERA

2) CITY OF HOUSTON RELEVANT FLOODPLAIN CRITERIA

3) HARRIS COUNTY RELEVANT FLOODPLAIN CRITERIA

(E) HCFCD HIGH WATER MARKS DATA

(F) TABLE OF CRITICAL FACILITIES AND ELEVATIONS

(G) PHOTOGRAPHS OF WWTP EQUIPMENT

I. PURPOSE

The purpose of this report is to identify critical facilities at the City of West University Place (City) Wastewater Treatment Plant (WWTP) that should be protected from future flood events and to identify critical flood event water surface elevations. The report was prepared by IDS Engineering Group (IDS) and contains written descriptions of facilities, levels of protection, and the criteria that defines the basis of the recommendations.

II. BACKGROUND

The City has an existing WWTP that is located in the floodway of Brays Bayou (Exhibit B-1). Critical equipment should be protected from the floodway to avoid interruption of plant operations and potential repair costs.

IDS has visited the WWTP site and has reviewed the following documentation related to the project:

1. Construction plans titled "West University Place Plans for Construction of 2 MGD Sewage Treatment Plant" and dated October 1980.

2. Survey documents of the site completed by Weisser Engineering Company dated July 27, 2018 (Exhibit C).

3. Federal Emergency Management Agency (FEMA) Flood Insurance Rate Maps (FIRM) dated June 18, 2007 to identify the 100-year and 500-year flood plain locations (Exhibit B-1).

4. FEMA FIS Study to identify the 100-year and 500-year water surface elevations at the site (Exhibit B-2).

5. Information provided by the City and Harris County Flood Control District (HCFCD) showing approximate high-water mark elevations from the Hurricane Harvey flood event and other historical rainfall events.

6. City of West University Place, Wastewater Treatment Plant Master Plan dated August 2019 prepared by Kimley-Horn and Associates, Inc.

7. Regulatory agency criteria on elevations of equipment and facilities within the floodway including criteria issued by:

    a. Texas Commission on Environmental Quality (TCEQ)
    b. City of Houston (COH)
    c. Harris County

All elevations included in this report are based on an average height above sea level and are based on the North American Vertical Datum of 1988 (NAVD 88), 2001 adjustment. This datum was adopted after Tropical Storm Alison and all current FEMA FIRMs are based on this.

Future FEMA FIRMs will use the GEOID12B vertical datum. Therefore, IDS has field verified the future datum change. Future reference to GEOID12B can be made by adding approximately 0.13-feet to the NAVD 88, 2001 Adjusted elevations.

III. LOCATION

The WWTP site is located within the City limits of the COH at 2801 North Braeswood Boulevard, Houston, Texas 77025. Exhibit A shows the location of the existing WWTP site.

IV. EXISTING CONDITIONS

The WWTP site is located within the floodway of Brays Bayou, Zone AE as defined by the FEMA FIRM – Panel 48201C0860L (Exhibit B-1). The existing 100-year and 500-year floodplain elevations at the WWTP site are 48.08-feet and 50.85-feet respectively, and the ground elevations of the site range approximately from 45.3-feet to 48.7-feet based on the above referenced topographical survey. The buildings and equipment on the site range in elevation from 48.15 to 62'. These elevations place the mechanical and electrical equipment above the 100 year but below the 500-year floodplain elevations. Additional details are presented in section VII of this report.

V. REGULATORY ANALYSIS

In 2019 the National Oceanic and Atmospheric Administration (NOAA) issued new rainfall data nationwide. The Texas release was termed Atlas 14. based on the issuance of this new rainfall data and recognized flooding outside mapped floodplains during Hurricane Harvey, HCFCD is in the process of conducting new flood studies on the major channels within Harris County. This program, MAAPNext, includes Brays Bayou and is anticipated to be complete in 2021. Upon completion of this program, Harris County, HCFCD, and the City of Houston are anticipated to adopt the data (floodplain/flood elevation data) developed from MAAPNext. The agencies plan to utilize this data to manage development within the floodplain in the interim, prior to the official release of the updated FEMA FIRM and FIS. The date at which FEMA will adopt new maps is unknown but is not expected until 2023 at the earliest.

The Atlas 14 data shows that more intense storms are more likely to occur over the region than those predicted from previous models. It is anticipated that once the new FIRMs are completed and adopted, the future 100-year floodplain will increase to approximately the elevation of the current 500-year floodplain for a large portion of the greater Houston area. Both the City of Houston and Harris County adopted new regulations to protect critical facilities from flooding based on this assumption and to ensure that new development does not impact future 100-year. It is anticipated but not guaranteed that these regulations will be updated again once FEMA adopts the new maps.

Based on conversations with HCFCD, protecting to the current 500-year elevation for Brays Bayou may be overly conservative. HCFCD anticipates that the new 100-year floodplain will not increase all the way to the current 500-year level but will be between the current 100-year and 500-year floodplain elevations. The exact increase is unknown at this time, but it possible that the level to which critical facilities at the WWTP site will need to be raised to be incompliance with local regulations could actually decrease after 2023.

The specific regulations that currently apply to this facility are as follows:

1. TCEQ rules for wastewater treatment facilities included in TCEQ 217.35 require protection from the current 100-year floodplain for all open process tanks and electrical units (Exhibit D-1). The TCEQ analysis must be based on the FEMA study in effect at the time plans are submitted to the TCEQ. This is less stringent than the requirements adopted by the CoH and Harris County as described below.

2. City of Houston adopted Ordinance No. 2018-258, an ordinance amending Chapter 19 of the Code of Ordinances, Houston, Texas, relating to floodplains (Exhibit D-2). The criteria states that for critical facilities located in an area that is subject to a 0.2 percent or greater chance of flooding in any given year (X Shaded Zone), all additions, new construction, and substantial improvements shall have the lowest floor elevated or floodproofed to at least three feet above the elevation that is subject to a 0.2 percent or greater chance of flooding. Prior to this ordinance, the COH requirement was for facilities to be located one foot above the 500-year floodplain elevation.

3. Harris County Regulations for Floodplain Management adopted July 9, 2019 require critical facilities within the 100-year floodplain to be located a minimum of 3 feet above the 500-year flood plain elevations (Exhibit D-3). This requirement was adopted in response to Hurricane Harvey and the Atlas 14 rainfall data. Prior to these requirements, Harris County required critical infrastructure to be elevated 3 feet above the 100-year floodplain elevation.

Based on the best available information at this time, and to be in compliance with local jurisdictional requirements, we advise that any WWTP equipment which is modified or replaced as part of the Wastewater Treatment Plant Master Plan be raised to a minimum of three feet above the current 500-year water surface elevation. This will be in compliance with the current rules adopted by the COH and Harris County and should provide adequate protection from the future 100-year flood plain. It should be noted that the required elevations for critical infrastructure as listed could change once the updated FIRMs are published, and the COH and Harris County regulations are modified based on those future maps.

VI. REVIEW OF HISTORICAL FLOOD DATA

In September 2017, Harris County Flood Control District made available a summary of highwater marks obtained during numerous flood events over the last 40 years. The data for Brays Bayou is included as Exhibit E. Please keep in mind that this data is approximate as noted in the exhibit and even though the data is from HCFCD they assume no responsibility for its accuracy. Even with this disclaimer, it is the best and most complete data available.

A review of this data shows that Brays Bayou reached a maximum water surface elevation of 47.9-feet at Buffalo Speedway during Hurricane Harvey and 47.2 feet at Kirby during Tropical Storm Alison. All other recorded highwater marks at these locations were lower. These elevations are close to the current 100-year floodplain elevations of 47.1 feet at Buffalo Speedway and 48.4 feet at Kirby.

This approximate flood gauge data reported by HCFCD is similar to information provided by the City, which indicated the water surface at the plant site reached 47.5 feet during Hurricane Harvey. This provides confirmation that the data from HCFCD is fairly accurate.

It is possible that improvements within Brays Bayou may have aided in reducing the flooding impact from Hurricane Harvey within the plant site. The improvements where completed after Tropical Storm Alison, but before Hurricane Harvey, and the flood levels were similar despite much higher recorded rainfall amounts during Harvey than during Alison.

It should be noted that as Brays Bayou becomes inundated during these large storm events, the higher water surface level in the Bayou will cause local storm sewer systems to back up and result in higher water surface elevations in areas upstream. As a result, water can back up in North Brasewood Blvd. to a higher elevation and then flow through the WWTP site to the Bayou.

VII. SUMMARY OF CRITICAL FACILITIES AND CRITICAL ELEVATIONS

IDS looked at each of the components of the WWTP and has identified which components are critical to the operation of the plant and/or should be protected from flood waters due to the expense of repairs, potential damages, and loss of operational capacity of the WWTP facilities. The table below provides a list of WWTP components and if they meet current requirements for flood protection of 3 feet above the current 500-year floodplain elevation – a minimum elevation of 53.85. More detail is shown in Exhibit F, including critical floodplain/high water mark elevations and the recommended elevation to which the equipment is suggested to be elevated. IDS consulted with HCFCD regarding the timing of updated Atlas 14 flood elevations for Brays Bayou. HCFCD anticipates public release of Atlas 14 flood elevations in 2021. At the time of the release of this information, critical elevations will need to be reconfirmed.

Equipment Unit	**Elevation** *(Notes 1 & 2)* **(ft)**	**Elevation Subject to Damage from Flooding (ft)**	**Operation Impacted by Hurricane Harvey Floodwaters**	**Meets Current Agency Requirements**
Electrical Service	49.85-51.80	49.85-51.8	No	No
Bottom of Generator	52.77	52.77	No	No
Blower Equipment	49.58	52.77	No	No
Chemical Feed Equipment Finished Floor Elevation (FF)	46.67	50.6	No	No
Sludge Transfer Pumps	46.67	48.7	No	No
Influent Lift Station Top of Wall	46.67	46.67 *(See Note 3)*	Yes	No
Electrical Control Building FF	47.31	48.15	No	No
Belt Press FF	61.67	62.0	No	Yes
Dewatering Sludge Pumps FF	46.67	48.0	No	No
NPW Pumps and Screen	48.20	50.7	No	No
Top of WWTP Basin Walls	56.17	56.17	No	Yes

Note:

1. *Elevations referenced to NAVD 88, 2001 Adj.*
2. *This elevation represents the elevation of the equipment pad/bottom of equipment. This is not the elevation of the equipment that is subject to flood damage. However, this elevation of the portion of the equipment that would need to be raised in order to meet current agency criteria.*

The electrical and mechanical equipment for the lift station are elevated above this level and were not damaged by Harvey; however, a flood elevation at this level or above will allow water to drain directly into the lift stations causing a significant amount of flood water to have to be pumped through the treatment plant.

While a majority of this equipment would not meet the current regulatory criteria if it was built today, this criteria only requires that any equipment undergoing substantial improvements be protected to three feet above the current 500-year floodplain elevation if it is undergoing the following, "repair, reconstruction, or improvement of a structure, where the cost of said improvement equals or exceeds 50% of the value of the structure either before the improvement is started or, if the structure has been damaged and is being restored, before the damage occurred – is not required to be elevated." Based on this requirement any project included in the CIP will have to be in compliance with these regulations when constructed but some lower cost interim solutions would be allowed.

VIII. RECOMMENDATIONS

There are three basic ways to protect facilities from flood damage. One is to prevent the flood waters from reaching the facilities by building a berm. The second is by improving drainage to reduce the flood levels. The third is to raise the potentially impacted facilities above the anticipated flood level.

IDS has looked at all of these potential options but has ruled out the first two for the following reasons. In regard to a berm, the existing facility is located within the floodway of Brays Bayou. Building berms within the flood way is a violation of floodplain ordinances because it could result in a higher flood elevation in the Bayou by taking away flood plain storage and by blocking flow within the floodway. As a result, Harris County does not permit berms to be constructed within the floodway.

In regards to lowering the flood level, significant work has been down on Brays Bayou. As discussed in section V, it is anticipated that the increase in 100-year flood elevations in Brays Bayou will not be as significant as it will be for other watersheds in the region when new FIRM maps are completed by FEMA. Significant unknows regarding what the ultimate flood elevations will be will remain until these new maps are released. Given the increase in rainfall values being used for the new maps, the work already down on Brays Bayou and the size of the watershed, reducing the current flood elevations are not practical and are outside of the scope of this study.

As a result, this report focuses on raising existing equipment that is included in the Wastewater Treatment Master Plan to meet the current regulations as the primary method of flood resiliency. It also includes recommendations to protect equipment on a temporary basis (until the Master Plan improvements are completed) up to the flood level that was seen in Hurricane Harvey. It should be noted that once the new FEMA maps are adopted and local flood plain regulations are updated based on these new maps, the recommendations in this study will need to be reviewed to confirm that they are still valid.

The following table identifies critical wastewater treatment plant components, the specific master plan projects that will impact these components (if any) and the additional requirements needed to meet the current regulations.

Equipment Unit	Mater Plan Recommendation	Additional Requirements
Electrical Service	Replace in Project P001/P003	Elevate Bottom of New Pad Mounted Transformer, Power Distribution Panel, Automatic Transfer Switch, and Main Circuit Breaker Panel to El. 53.85’
Generator	Not in Current Plan	Not required to be raised if not substantially modified. It is located above the current 500-year flood plain, however; if installed as new today the Generator would need to be Raised by Approximately 1.2 Feet (Min. El. 53.85’)
Blowers	Replace in Project P002	Elevate Blowers by Approximately 4.5 Feet (Min. El. 53.85’)
Chemical Feed Equipment	Replace in Project P006	Elevate All Mechanical/Electrical Equipment Associated with New Chemical Equipment and Protect Chemical Tanks to El. 53.85’
Sludge Transfer Pumps	Not in Current Plan	If substantially modified would need to elevate Sludge Transfer Pumps by Approximately 7.5 Feet; this is not practical, and these were not damaged during Harvey. The cost to elevate these would exceed the cost to repair them if they were damaged in an event the exceeded Harvey levels.
Influent Lift Station Top of Wall	Replace Screw Pumps with Submersible Pumps in Project P007	Construct New Lift Station Wet Well with Flood Proof Hatches to Protect to El. 53.85’
Electrical Control Building FF	Replace MCC equipment in Project P001/P003	Elevate New Electrical Enclosures by Approximately 6.5 Feet (Min. El. 53.85’)
Belt Press FF	Not in Current Plan	No Additional Requirements
Dewatering Sludge Pumps FF	Not in Current Plan	Elevate Pumps by Approximately 7.5 Feet; Optionally Do Not Raise and Forgo Sludge Dewatering in the Event of Pump Failure due to Flooding
NPW Pumps and Screen	Replace in Project 016	Replace Existing NPW Pumps with Submersible Pumps Installed in the Chlorine Contact Basin
Top of WWTP Basin Walls	Not in Current Plan	No Additional Requirements

In addition to the equipment listed above, all equipment susceptible to impact from forces of floodwater, including buoyant forces, should be anchored. This includes equipment such as the dumpsters collecting solid waste from the influent bar screen and from the sludge dewatering equipment, chemical and sludge holding tanks, etc. All sanitary sewer manhole covers should be sealed with no openings in the lid.

It is speculated based on historical rainfall events that the 100-year floodplain elevation along Brays Bayou near the site may not increase to the level of current 500-year floodplain elevation when the new flood map data becomes available or when the new FIRMs are adopted. Therefore, the current COH and Harris County design criteria may be more stringent then what will be required when new maps and regulations are published. IDS recommends that for any project currently listed in the Master Plan related to the equipment listed above which are not recommended to be completed immediately, the City consider waiting to proceed with the project until the time at which the new floodplain maps and agency criteria are published.

Based on data from HCFCD and information provided by the City, the equipment in the table above was not damaged by flood waters produced by Hurricane Harvey. Because the equipment was not damaged during the flood of record at the WWTP site, IDS does not recommend separate projects to raise equipment that is not being improved or modified under the Master Plan.

It is important to note that although the influent lift station was not damaged during Hurricane Harvey to our knowledge, the lift station was entirely filled with flood waters from Brays Bayou. This inhibits the ability to convey flow from the City's gravity sanitary sewer system. It also results in the treatment of mostly flood waters conveyed through the lift station as opposed to only treating what is passed through the City's gravity sanitary sewer system. It is recommended that a new wet well with water-tight hatches and submersible pumps be constructed to solve this issue as proposed in the Master Plan Project P007. If the City elect to not proceed with Project P007, a separate project to flood proof the influent lift station is recommended. Interim solutions are also presented below.

Conceptual opinions of probable cost have been prepared for the recommendations listed above. Engineering, surveying, and materials testing fees are excluded from these costs. The cost estimates of the related improvements from the Master Plan have been included for your reference.

- Electrical Service (P001 - Immediate)
  - The Master Plan includes $606,000 for the replacement of the electrical service equipment and electrical modifications/improvements. We estimate an approximate construction cost of $200,000 to raise this equipment on a new platform. We met with Kimley-Horn and Associates, Inc. and they confirmed that approximately $200,000 of the $606,000 was allocated to raising the equipment, therefore we estimate no additional cost associated with P001 of the Master Plan.

- Blowers (P002 - Immediate)
  - The Master Plan includes $2,611,000 for Treatment Process Optimization. Approximately $900,000 was estimated for the replacement of the blowers, piping, associated electrical and appurtenances. We estimate an approximate construction cost of $480,000 to elevate the blowers. We met with Kimley-Horn and Associates, Inc. and they confirmed that approximately $180,000 of the $2,611,000 was allocated to raising the equipment, therefore we estimate an additional cost of $300,000 associated with P002 of the Master Plan.

- Chemical Feed Equipment (P006 – 5 Year)
  - The Master Plan includes $473,000 for chlorine conversion/dechlorination improvements. We estimate an approximate construction cost of an additional $140,000 for flood mitigation for this equipment.

- Lift Station (P007 – 5 Year)
  - The Master Plan includes $1,217,000 for replacing the Screw Pumps with Submersible Pumps installed in a newly constructed sanitary sewer wet well. We recommend proceeding with this project as planned. However, we estimate the approximate total cost of the project to be $1,520,000 to achieve flood resiliency for this equipment.
  - In the interim, the walls around the existing lift station should be raised by a minimum of 1.5' to prevent flood waters from entering the lift station during any event up to the current 100-year flood level. Note that to the fully comply with current regulations the walls would need to be raised to a level of 53.85 or by about 7 feet. Given the configuration of the site this is not practice. Since the entire lift station is programed to be replaced, we feel that an interim solution is justified at this location as long as the replacement of the lift station will occur in the near future. This interim work will require the removal and replacement of handrails, modifications to access stairs and some electrical conduits. In addition to raising the walls, a drain should be added near the stairs to help with local drainage in the area. It is estimated that this work will cost about $50,000 to $100,000.

- Electrical Control / Office Building (P003 and P011 – Immediate)
  - The Master Plan includes $1,268,000 for the replacement of the electrical modifications/improvements (P003) and $1,683,000 for improvements to the Lab/Office Building (P011). We estimate an approximate construction cost of an additional $580,000 to raise the existing Motor Control Center and electrical controls by adding a second floor to the existing control and office building. This will allow the offices to be moved to the 2nd floor along with the electrical equipment. It is possible to complete this work by installing new columns just outside of the existing building and using these columns to support the second floor. This will keep the existing building from having to support the weight of the structure above it. It will also minimize the impact to operations while the new building is being constructed. By constructing the new building above the existing one, it will minimize

the need to reroute duct banks and other underground infrastructure to a new building location.

- The costs associated with raising the Motor Control Center and associated equipment assume that the existing electrical conduit and conductors that are connected to the existing electrical equipment can remain in place and continue to be used. It is possible that these underground conduits/conductors may be in poor condition requiring replacement, which would increase the cost of the project. Therefore, additional studies, including field investigations and engineering report, will need to be completed in order to confirm the project scope and costs.
- In the interim, we recommend that the City keep sandbags, inflatable dams or other similar items on site to protect the existing building from flood events. With Harvey only reaching a few inches above the finished floor elevation of the building these materials placed around the building can provide protection up a Hurricane Harvey level flood at a minimal cost.

- NPW Pumps and Screens (P016 – 10 Year)
  - The Master Plan Includes $230,000 for replacement of the existing NPW system. We recommend replacing the existing NPW pumps with submersible pumps rather than skid mounted pumps to protect the NPW from flood damage. We met with Kimley-Horn and Associates, Inc. and they confirmed that the costs included for P016 of the Master Plan were based on the installation of submersible pumps, therefore we estimate no additional cost associated with P016 of the Master Plan.

Based on the construction cost estimates included in the bulleted items above, we estimate a total of $1,323,000 of construction costs will be required in addition to the costs of the projects described in the Master Plan (P001 – P020) in order to achieve flood resiliency.

EXHIBITS

EXHIBIT A

EXISTING WASTEWATER TREATMENT PLANT SITE LOCATION



Legend

- Wastewater Facilities
- Parcels (HCAD 2019-10)
- *NearMap Aerials (April 2020)

IDS Engineering Group
13430 Northwest Fwy. Ste. 700
Houston, Texas 77040
713.462.3178
TBPE F-002726 | TBPLS 10110700

50 YEARS 1970-2020

EXHIBIT A-1

CITY OF WEST UNIVERSITY PLACE

WWTP LOCATION MAP
2801 NORTH BRAESWOOD BLVD
HOUSTON, TEXAS 77025

N

0 100 200 400 Feet

1 inch = 200 feet

IDS Engineering Group \\houvgisdb1\Projects\2300\2348-001-03_Flood Study Exhibits\A-1_Location_Map.mxd Plotted: 8/5/2020 at 4:39:07 PM by pbond

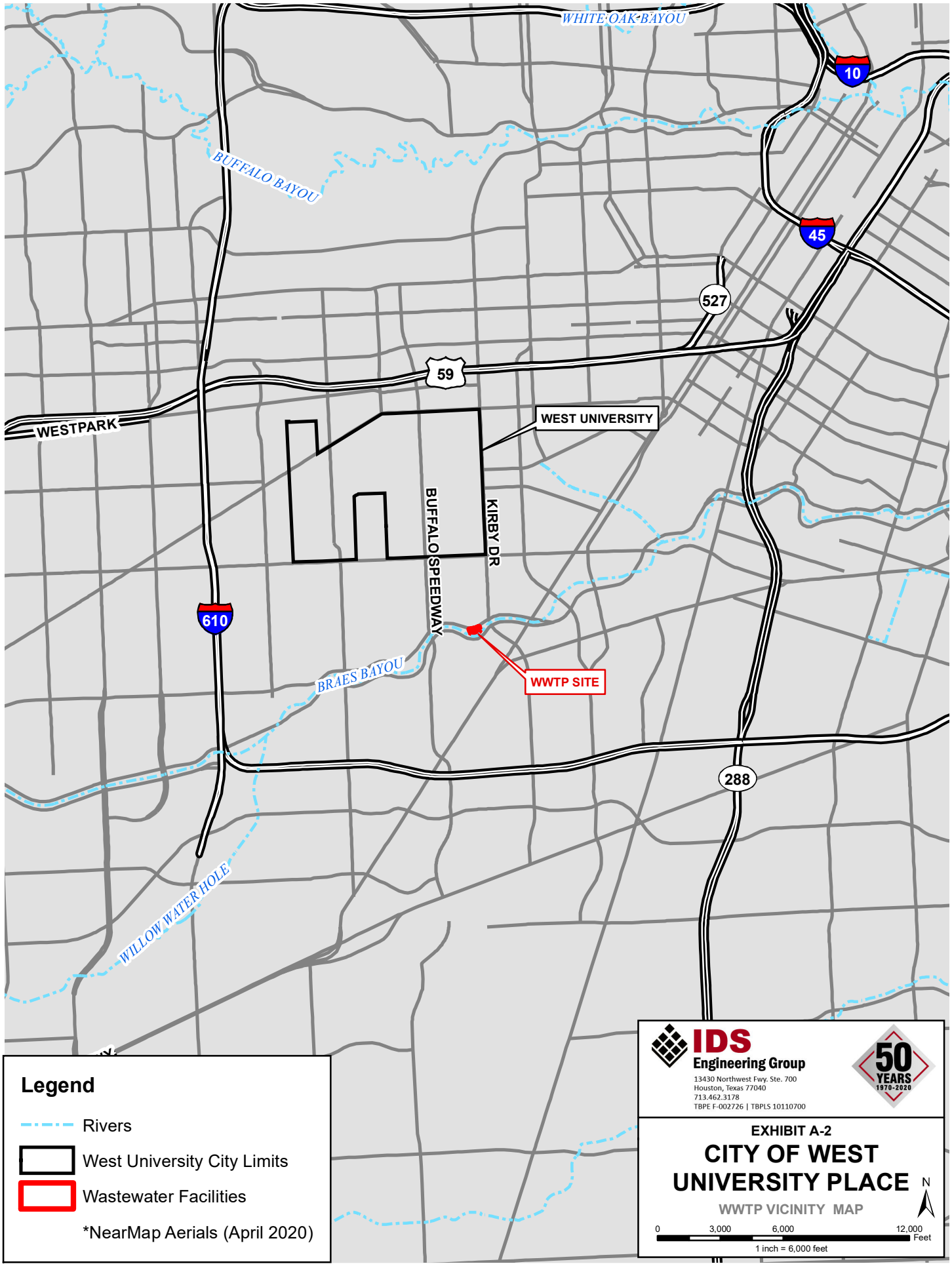

IDS Engineering Group \\houvgisdb1\Projects\2300\2348-001-03_Flood Study Exhibits\A-2_Vicinity_Map.mxd Plotted: 8/5/2020 at 4:53:33 PM by pbond

EXHIBIT B

FEMA FLOODPLAIN DOCUMENTATION

EXHIBIT B-1

FLOODPLAIN MAP FOR SITE

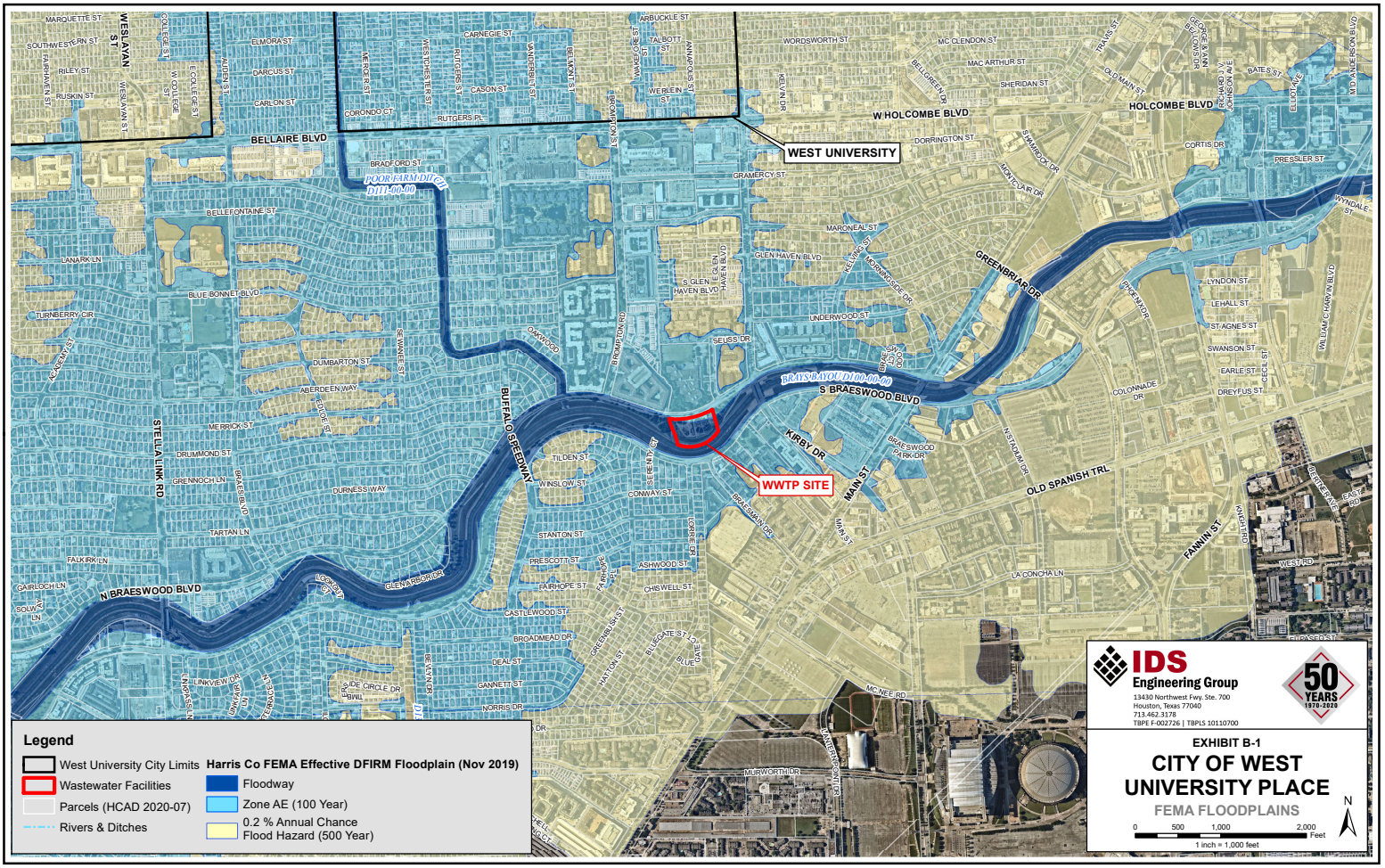

IDS Engineering Group \\houvgisdb1\Projects\2300\2348-001-03_Flood Study Exhibits\B-1_Floodplains_11x17.mxd Plotted: 8/5/2020 at 5:12:51 PM by pbond

EXHIBIT B-2

FIS PROFILE OF BRAYS BAYOU NEAR SITE

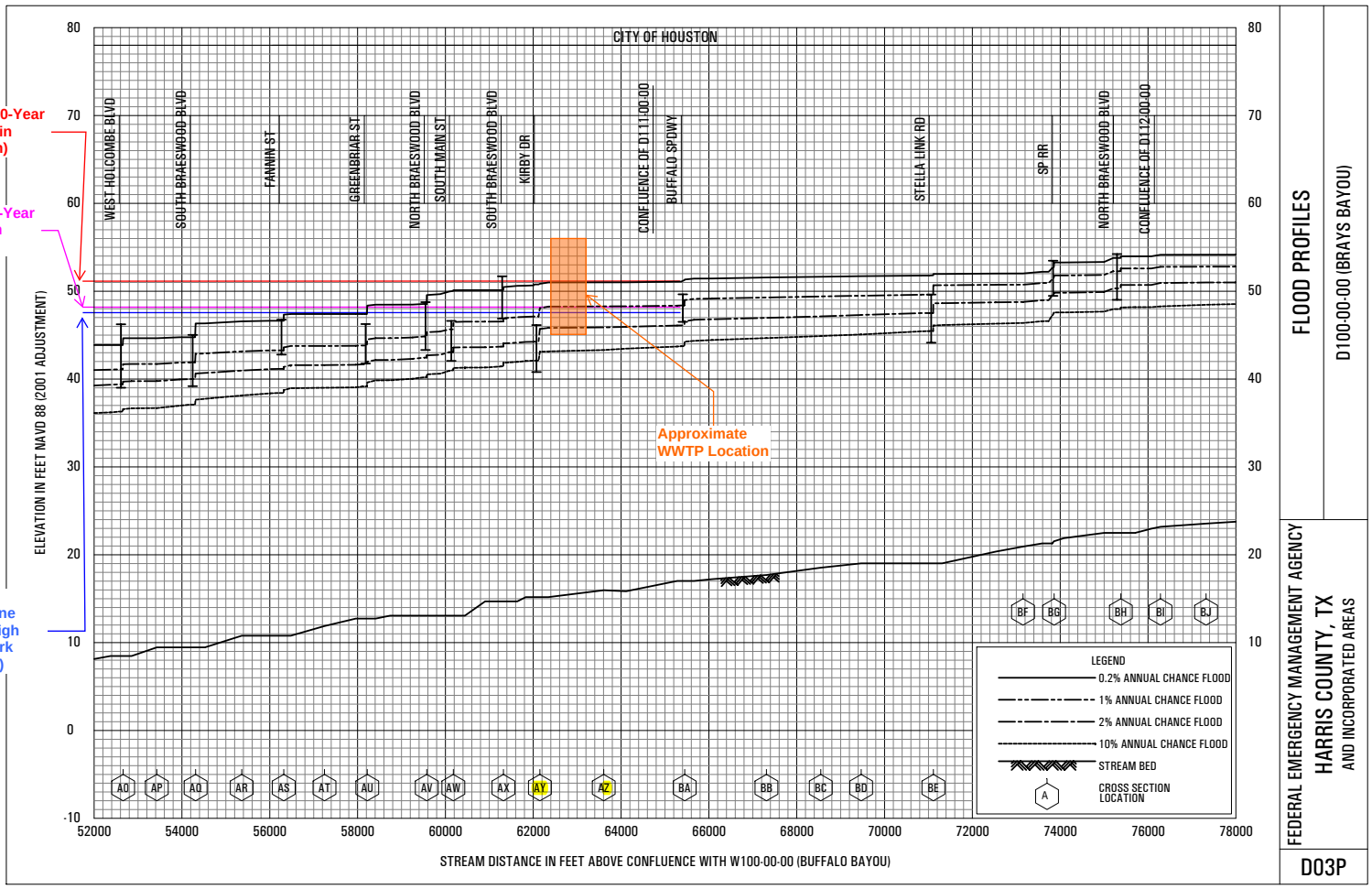
50.85 (500-Year Floodplain Elevation)
48.08 (100-Year Floodplain Elevation)
47.5 (1Hurricane Harvey High Water Mark Elevation)
CITY OF HOUSTON
WEST HOLCOMBE BLVD
SOUTH BRAESWOOD BLVD
FANNIN ST
GREENBRIAR ST
NORTH BRAESWOOD BLVD
SOUTH MAIN ST
SOUTH BRAESWOOD BLVD
KIRBY DR
CONFLUENCE OF D111-00-00
BUFFALO SPDWY
STELLA LINK RD
SP RR
NORTH BRAESWOOD BLVD
CONFLUENCE OF D112-00-00
Approximate WWTP Location
ELEVATION IN FEET NAVD 88 (2001 ADJUSTMENT)
STREAM DISTANCE IN FEET ABOVE CONFLUENCE WITH W100-00-00 (BUFFALO BAYOU)
LEGEND
0.2% ANNUAL CHANCE FLOOD
1% ANNUAL CHANCE FLOOD
2% ANNUAL CHANCE FLOOD
10% ANNUAL CHANCE FLOOD
STREAM BED
CROSS SECTION LOCATION
FLOOD PROFILES
D100-00-00 (BRAYS BAYOU)
FEDERAL EMERGENCY MANAGEMENT AGENCY
HARRIS COUNTY, TX
AND INCORPORATED AREAS
D03P

Exhibit B-2

EXHIBIT C

EXISTING WASTEWATER TREATMENT PLANT SITE SURVEY

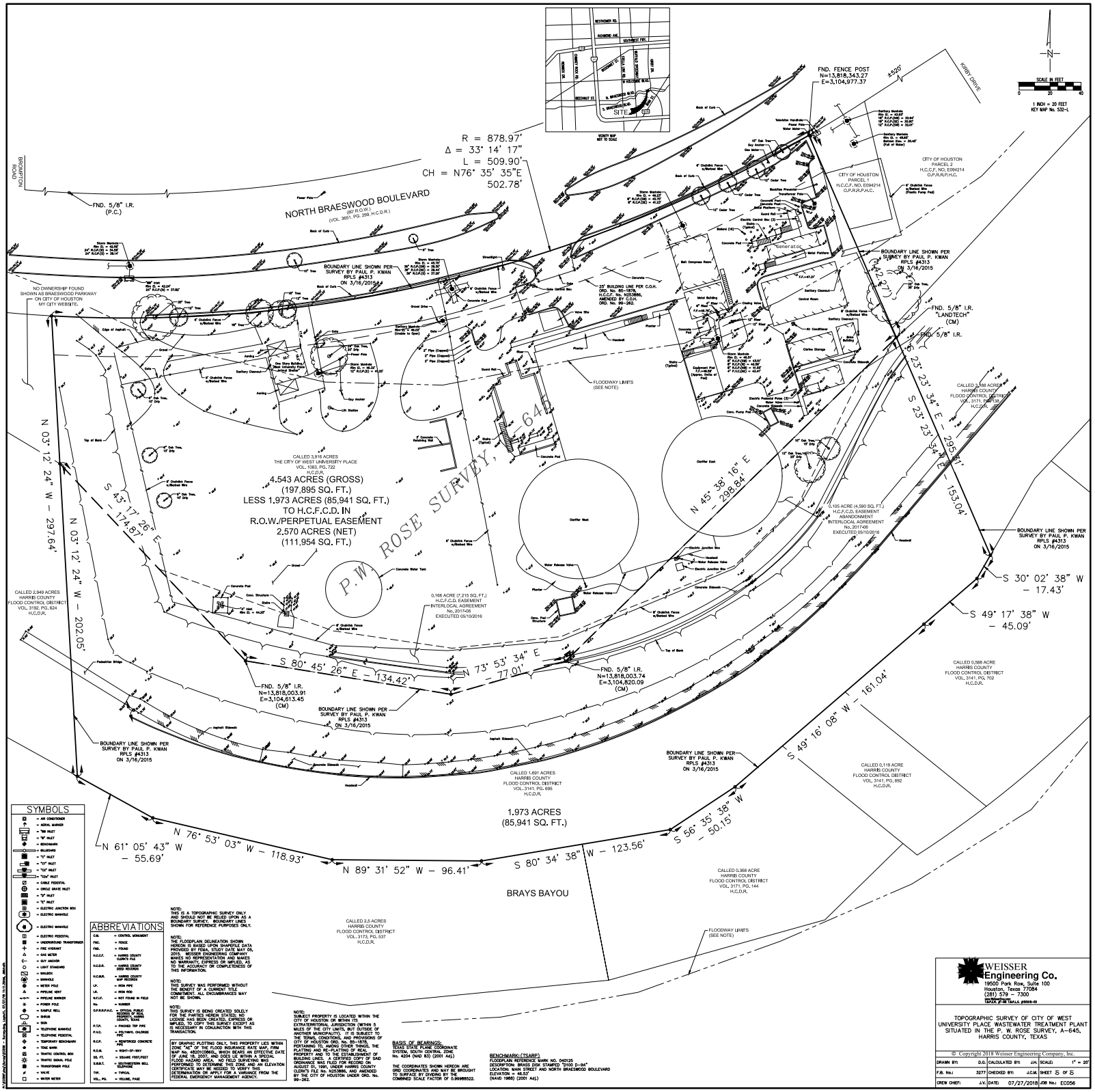

SYMBOLS

- AIR CONDITIONER
- AERIAL MARKER
- "CB" INLET
- "D" INLET
- BENCHMARK
- BILLBOARD
- "S" INLET
- "O" INLET
- "CI" INLET
- "COI" INLET
- CABLE PEDESTAL
- CIRCLE GRATE INLET
- "SI" INLET
- "C" INLET
- ELECTRIC JUNCTION BOX
- ELECTRIC MANHOLE
- ELECTRIC METER
- ELECTRIC PEDESTAL
- UNDERGROUND TRANSFORMER
- FIRE HYDRANT
- GAS METER
- GUY ANCHOR
- LIGHT STANDARD
- MANHOLE
- METER POLE
- PIPELINE MARKER
- POWER POLE
- SAMPLE WELL
- SHRUB
- SIGN
- TELEPHONE MANHOLE
- TELEPHONE PEDESTAL
- TEMPORARY BENCHMARK
- TOXIC MARK
- TRAFFIC CONTROL BOX
- TRAFFIC SIGNAL POLE
- TRANSFORMER POLE
- VALVE
- WATER METER

ABBREVIATIONS

C.M.	= CONTROL MONUMENT
FNC.	= FENCE
FND.	= FOUND
H.C.C.F.	= HARRIS COUNTY CLERK'S FILE
H.C.D.R.	= HARRIS COUNTY DEED RECORDS
H.C.M.R.	= HARRIS COUNTY MAP RECORDS
I.P.	= IRON PIPE
I.R.	= IRON ROD
N.F.I.F.	= NOT FOUND IN FIELD
No.	= NUMBER
O.P.R.R.P.H.C.	= OFFICIAL PUBLIC RECORDS OF REAL PROPERTY OF HARRIS COUNTY, TEXAS
P.T.P.	= PINCHED TOP PIPE
P.V.C.	= POLYVINYL CHLORIDE PIPE
R.C.P.	= REINFORCED CONCRETE PIPE
R.O.W.	= RIGHT-OF-WAY
SQ. FT.	= SQUARE FOOT/FEET
S.W.B.T.	= SOUTHWESTERN BELL TELEPHONE
TYP.	= TYPICAL
VOL., PG.	= VOLUME, PAGE

NOTE:
THIS IS A TOPOGRAPHIC SURVEY ONLY AND SHOULD NOT BE RELIED UPON AS A BOUNDARY SURVEY. BOUNDARY LINES SHOWN FOR REFERENCE PURPOSES ONLY.

NOTE:
THE FLOODPLAIN DELINEATION SHOWN HEREON IS BASED UPON SHAPEFILE DATA PROVIDED BY FEMA, STUDY DATE MAY 06, 2015. WEISSER ENGINEERING COMPANY, INC. MAKES NO GUARANTEES AND ASSUMES NO WARRANTY, EXPRESS OR IMPLIED, AS TO THE ACCURACY OR COMPLETENESS OF THIS INFORMATION.

NOTE:
THIS SURVEY WAS PERFORMED WITHOUT THE BENEFIT OF A CURRENT TITLE COMMITMENT. ALL ENCUMBRANCES MAY NOT BE SHOWN.

NOTE:
THIS SURVEY IS BEING CREATED SOLELY FOR THE PARTIES HEREIN STATED. NO LICENSE HAS BEEN CREATED, EXPRESS OR IMPLIED, TO COPY THIS SURVEY EXCEPT AS IS NECESSARY IN CONJUNCTION WITH THIS TRANSACTION.

BY GRAPHIC PLOTTING ONLY, THIS PROPERTY LIES WITHIN ZONE "AE" OF THE FLOOD INSURANCE RATE MAP, FIRM MAP No. 48201C0890L, WHICH BEARS AN EFFECTIVE DATE OF JUNE 18, 2007, AND DOES LIE WITHIN A SPECIAL FLOOD HAZARD AREA. NO FIELD SURVEYING WAS PERFORMED TO DETERMINE THIS ZONE AND AN ELEVATION CERTIFICATE MAY BE NEEDED TO VERIFY THIS DETERMINATION OR OBTAIN A VARIANCE FROM THE FEDERAL EMERGENCY MANAGEMENT AGENCY.

NOTE:
SUBJECT PROPERTY IS LOCATED WITHIN THE CITY LIMITS OF HOUSTON OR WITHIN ITS EXTRATERRITORIAL JURISDICTION (WITHIN 5 MILES OF THE CITY LIMITS, BUT OUTSIDE OF ANOTHER MUNICIPALITY). IT IS SUBJECT TO THE TERMS, CONDITIONS, AND PROVISIONS OF CITY OF HOUSTON ORD. No. 85-1875, PERTAINING TO, AMONG OTHER THINGS, THE PLATTING AND RE-PLATTING OF REAL PROPERTY. PRIOR TO THE DEVELOPMENT OF BUILDABLE LAND, A RESTRICTIVE COVENANT OF SAID ORDINANCE WAS FILED FOR RECORD ON AUGUST 01, 1991, UNDER HARRIS COUNTY CLERK'S FILE No. N253886, AND AMENDED BY THE CITY OF HOUSTON UNDER ORD. No. 99-262.

BASIS OF BEARINGS:
TEXAS STATE PLANE COORDINATE SYSTEM, SOUTH CENTRAL ZONE, No. 4204 (NAD 83) (2001 Adj.)

THE COORDINATES SHOWN HEREON ARE GRID COORDINATES AND MAY BE BROUGHT TO SURFACE BY DIVIDING BY THE COMBINED SCALE FACTOR OF 0.99988522.

BENCHMARK: (TSARP)
FLOODPLAIN REFERENCE MARK NO. 040125
DESCRIPTION: BRASS DISK STAMPED "2100 D-94"
LOCATION: MAIN STREET AND NORTH BRAESWOOD BOULEVARD
ELEVATION = 46.52'
(NAVD 1988) (2001 Adj.)

WEISSER Engineering Co.
19500 Park Row, Suite 100
Houston, Texas 77084
(281) 579 – 7300
TBPE/LS Firm F-No TBPLS #10059-00

TOPOGRAPHIC SURVEY OF CITY OF WEST UNIVERSITY PLACE WASTEWATER TREATMENT PLANT SITUATED IN THE P. W. ROSE SURVEY, A-645, HARRIS COUNTY, TEXAS

© Copyright 2018 Weisser Engineering Company, Inc.

DRAWN BY:	D.G.	CALCULATED BY:	J.K.	SCALE:	1" = 20'
F.B. No.:	3277	CHECKED BY:	J.C.M.	SHEET	5 OF 5
CREW CHIEF:	J.V.	DATE:	07/27/2018	JOB No.:	EC056

EXHIBIT D

JURISDICTIONAL REGULATORY AGENCY CRITERIA

EXHIBIT D-1

TCEQ RELEVANT FLOODPLAIN CRITERIA

SUBCHAPTER B: WASTEWATER TREATMENT FACILITY DESIGN REQUIREMENTS

§§217.31 - 217.40
Effective December 4, 2015

§217.31. Applicability.

This subchapter details the design values that an owner shall use when determining the size of any wastewater treatment facility component. This subchapter applies to the treatment design for a new wastewater treatment facility, the alteration of an existing wastewater treatment facility, the re-rating of an existing wastewater treatment facility, and to an existing wastewater treatment facility that is required to apply for a new permit.

Adopted November 4, 2015 Effective December 4, 2015

§217.32. Organic Loadings and Flows for New Wastewater Treatment Facilities.

(a) The design of a new wastewater treatment facility must be based on the flows and loadings in paragraphs (1) - (3) of this subsection, unless subsection (b) of this section applies.

(1) Design flow.

(A) If the flow is greater than or equal to 1.0 million gallons per day, as determined by multiplying the per capita flow in Table B.1. in paragraph (3) of this subsection by the number of individuals in the service area, then the design flow is the flow calculated from the table.

(B) If the flow is less than 1.0 million gallons per day as determined by multiplying the per capita flow in Table B.1. in paragraph (3) of this subsection by the number of individuals in the service area, then the design flow is determined by multiplying the average annual flow calculated from the table by a factor of at least 1.5.

(C) The design flow must be based on the flow authorized in the wastewater treatment facility's wastewater permit.

(2) Peak flow. When site-specific data is unavailable, the peak flow must be determined by multiplying the design flow by a factor of at least 4.0. If site-specific data or projections are available, the peak flow must be based on the site-specific data.

§217.35. One Hundred-Year Flood Plain Requirements.

(a) If a 100-year flood plain is located within 1,000 feet of the site of a wastewater treatment facility, the 100-year flood plain must be shown on the site plan. A flood plain determination must be based on a superimposition of the 100-year flood elevation on the most accurate available topography and elevation data for the site.

(1) A 100-year flood plain must be based on the Federal Emergency Management Agency (FEMA) Flood Insurance Study in effect at the time the plans and specifications are submitted to the executive director. FEMA maps are prima facie evidence of flood plain locations.

(2) An appropriate flood insurance rate map or Flood Insurance Study profile, adjusted to the site's vertical data, may be used to determine flood elevations.

(3) If a site is adjacent to a FEMA 100-year flood delineation, but has no flood elevation published, a 100-year flood elevation may be determined by overlaying the effective FEMA delineation over a United States Geological Survey Quadrangle Map and interpolating a flood elevation.

(4) If FEMA flood plain information is not available, the engineering report shall include a 100-year flood elevation based on the best information available.

(b) The 100-year flood plain must be shown on the profile drawings.

(1) The FEMA 100-year water surface elevation must be marked on a hydraulic profile of a wastewater treatment facility in accordance with the vertical scale of the drawing.

(2) If a wastewater treatment facility will occupy less than 1,000 feet of shoreline along a flood plain, the profile must show a single line coincident with the elevation of the centerline of any outfall pipe.

(3) If a wastewater treatment facility will occupy 1,000 feet or more of shoreline along a flood plain, the profile must show the water surface elevation at both the upstream and downstream limits of any protective structure for the wastewater treatment facility.

(c) The executive director will not approve a design of a proposed treatment unit within a 100-year flood plain, unless the design provides protection for all open process tanks and electric units from inundation during a 100-year flood event.

EXHIBIT D-2

CITY OF HOUSTON RELEVANT FLOODPLAIN CRITERIA

City of Houston, Texas, Ordinance No. 2018-258

AN ORDINANCE AMENDING CHAPTER 19 OF THE CODE OF ORDINANCES, HOUSTON, TEXAS, RELATING TO FLOODPLAINS; CONTAINING FINDINGS AND OTHER PROVISIONS RELATING TO THE FOREGOING SUBJECT; PROVIDING FOR SEVERABILITY; AND CONTAINING AN EFFECTIVE DATE.

* * * * *

WHEREAS, the residents and business owners of the City of Houston have experienced worsening flooding events, the most recent being Hurricane Harvey in 2017, which dropped more than 50 inches of rain in the region, and which was preceded by the 2016 Tax Day Flood and the 2015 Memorial Day Flood; and

WHEREAS, the Mayor and City Council have resolved to make the City more resilient as it rebuilds; and

WHEREAS, the City of Houston is a municipal corporation and home rule city organized under the Constitution and the general and special laws of the State of Texas, and thereby exercises powers granted by the City's Charter and the provisions of Article XI, Section 5 of the Texas Constitution; and

WHEREAS, in the exercise of its lawful authority, the City may enact police power ordinances to promote and protect the health, safety and welfare of the public; and

WHEREAS, the City may implement, in the exercise of its lawful authority, any federal law or rules relating to development in flood hazard areas; and

WHEREAS, a key tool in protecting human life, health, and economic stability, minimize damage to public facilities and utilities is ensuring responsible development in the floodplain areas; and

WHEREAS, the Federal Emergency Management Agency (FEMA) promulgates maps and recommended regulations for development in flood-prone areas; and

WHEREAS, FEMA and Houston Public Works study and identify flood hazard areas within the boundaries of the City of Houston, and such areas may be subject to periodic inundation which may result in loss of life and property, health and safety hazards, disruption of commerce and governmental services, extraordinary public expenditures for flood protection and relief, and impairment of the tax base, all of which adversely affect the public health, safety and general welfare; and

WHEREAS, Houston has seen severe flooding since its founding, thus both historical and recent storms indicate that Houston will continue to see severe flooding events; and

elevated above the highest adjacent grade at least two feet above the depth number specified in feet on the FIRM or at least three feet above the highest adjacent grade where no depth number is specified or, together with utility and sanitary sewerage facilities, be completely floodproofed to or above that level.

(d) All structures to be constructed in whole or in part within these zones shall be designed with adequate drainage paths around structures on slopes to guide floodwaters around and away from those structures.

(e) For critical facilities located in an area that is subject to a 0.2 percent or greater chance of flooding in any given year (X Shaded Zone), all additions, new construction, and substantial improvements shall have the lowest floor elevated or floodproofed to at least three feet above the elevation that is subject to a 0.2 percent or greater chance of flooding.

Sec. 19-34. Additional standards for design and mitigation.

(a) For areas that the city engineer has determined have no conveyance capacity, proposed development shall not, at any time, diminish the storage volume within a Houston special flood hazard area. Applicants shall demonstrate compliance with this requirement by submitting plans that demonstrate one or more of the following:

(1) Demonstrate that any loss of storage volume will be mitigated on-site, such that there is no net fill;

(2) Demonstrate that any loss of storage volume will be mitigated off-site in accordance with rules and regulations promulgated by the director pursuant to subsection (f) of section 19-1of this Code;

(3) Identify an amount of fill associated with elevated floor construction that, although the amount may be approaching zero, is recognized by the city engineer as sufficiently important to be addressed, but for which mitigation is not required, in accordance with rules and regulations promulgated by the director pursuant to subsection (f) of section 19-1 of this Code; or

(4) In the 0.2 percent chance floodplain, the amount of fill proposed does not impact or impede the 100 year overland sheet flow in the watershed.

(b) For areas that the city engineer has determined to have conveyance capacity, and for areas for which the city engineer has made no determination of conveyance capacity, development shall not, at any time, either change the conveyance capacity or diminish storage volume of the Houston special flood hazard area; except that, if the applicant submits a Conditional Letter of Map Revision approved by FEMA, the engineering analysis need only demonstrate that the development will not, at any time, diminish storage volume of the Houston special flood hazard area.

EXHIBIT D-3

HARRIS COUNTY RELEVANT FLOODPLAIN CRITERIA

REGULATIONS OF HARRIS COUNTY, TEXAS FOR FLOODPLAIN MANAGEMENT



AS

ADOPTED 5 JUNE 2007

EFFECTIVE 18 JUNE 2007

AMENDED 8 NOVEMBER 2011

AMENDED 5 DECEMBER 2017

EFFECTIVE 1 JANUARY 2018

AMENDED 9 JULY 2019

EFFECTIVE 9 JULY 2019

JOHN R. BLOUNT, P.E.
COUNTY ENGINEER

LOYD SMITH, P.E.
ASSISTANT COUNTY ENGINEER

when measured 10 feet from the edge of the slab or 12 inches above the crown of the adjacent street which ever results in the highest elevation (an exception may be granted on sloping properties where the crown requirement is not achievable).

2. If the structure is other than a single family residence the slab shall have a minimum of 6 inches of exposure to adjacent grade and be at least 12 inches above the crown of the adjacent street (an exception may be granted on sloping properties where the crown requirements cannot be achieved).

3. In cases where a structure is located geographically in the 0.2 percent or 500-year floodplain and the ground is lower than the 0.2 percent or 500-year level but higher than the 1 percent or 100-year level, the finished floor elevation of the lowest habitable floor shall be elevated at or above the 0.2 percent or 500-year level.

SECTION 4.07 - CONDITIONS OF A CLASS "II" PERMIT

A Class "II" Permit will be issued when the County Engineer determines that the development will be made on land that is located in any "A" Zone, below the 1 percent or 100-year

flood elevation in any Zone, in a floodway, or in a "V" Zone and that all other necessary reviews and approvals required by County regulations have been obtained. The following conditions must be met:

(a) Notwithstanding anything below to the contrary, no development or other encroachment, including fill, is allowed in a floodway which will result in any increase in the base flood elevations within the floodway during discharge of water of a base flood.

(b) The following conditions must be met for new construction or Substantial Improvement of a structure or repair of a structure with Substantial Damage.

1. The top of the subfloor of the lowest habitable floor must be elevated to twenty-four (24) or more inches above the 0.2 percent or 500-year flood elevation or twelve (12) inches above the level of the crown of the nearest public street, whichever is higher, except in a floodway where the bottom of the lowest supporting member of the structure shall be elevated thirty-six (36) or more inches above 0.2 percent or 500-year flood elevation.

6. Water heaters, furnaces, air conditioning systems, electrical distribution panels and any other mechanical or electrical equipment must be elevated to at least twenty-four (24) inches above the 0.2 percent or 500-year flood elevation. Separate electrical circuits shall serve any level below the 0.2 percent or 500-year flood elevation and shall be dropped from above.

7. Basements may be constructed only in nonresidential structures, and only on land which is not in a floodway or "V" Zone, and must, together with attendant utility and sanitary facilities, be designed so that below the base flood elevation the structure is watertight with walls substantially impermeable to the passage of water and with structural components having the capability of resisting hydrostatic and hydrodynamic loads and effects of buoyancy. A registered professional engineer shall certify that the floodproofing methods used in the construction of the basement are adequate to withstand the flood depths, pressures, velocities, impact and uplift forces and other factors associated with the base flood. A record of such certification

indicating the specific elevation to which such structures are floodproofed shall be maintained with the County Engineer.

8. All air ducts, loose pipes, propane tanks and storage tanks located at or below the base flood level shall be firmly anchored to prevent flotation. Tanks and ducts shall be vented to at least twenty-four (24) inches above the 0.2 percent or 500-year flood elevation.

9. No fill may be used to elevate structures in the 1 percent or 100-year floodplain. Structures may be constructed on an open foundation, such as piers, or on continuous foundation walls with properly sized and located openings. All foundations are required to be designed by a registered professional engineer. The Plans shall clearly show compliance with all provisions of these regulations. Fill may be used in coastal surge zones where floodplain fill mitigation is not an issue, however the standard for foundations remain the same.

10. All structures shall be designed to withstand a three second gust basic wind speed of 120

EXHIBIT E

HCFCD HIGH WATER MARKS DATA

SUMMARY SHEET - HCFCD HIGH WATER MARKS 9/13/2017

BRAYS BAYOU D100-00-00 Page 1 of 2

ROAD NAME	STAGE GAGE	BRIDGE BM ELEV	78 TO '01 ADJUST	10.0%	2.0%	1.0%	0.2%	STORM EVENTS																		HARVEY 8/27/17
								7/30/54	6/18/73	8/31/81	ALICIA 8/18/83	CHANTAL 9/19/83	CHANTAL 8/1/89	CHANTAL 3/4/92	10/18/94	FRANCES 9/11/98	ALLISON 6/9/01	11/17/03	IKE 9/13/08	4/28/09	1/9/12	5/26/15	4/18/16	1/18/17	
75 TH		20.35	-0.5	14.4	17.1	18.3	21.5				13.4	12.7			11.9	13.6	16.5	8.8	16.8	N/A	10.1	12.4	11.9	8.1	16.1
LAWNDALE	410	21.97	-0.6	18.1	20.7	21.9	24.7				16.7	17.0	13.9		17.6	17.9	22.8	14.9	17.0	9.2	15.6	18.4	18.0	13.4	20.7
IH 45 (IN BOUND)		31.49	-0.6	21.7	24.4	25.6	28.3		20.1			20.8			21.7	20.7	27.6	20.0	21.6	N/A	18.4	21.6	18.5	16.9	25.5
TELEPHONE RD		25.65	-0.6	23.4	26.0	27.3	30.2	22.4	21.7	20.2	18.7				22.1	21.8	27.8	15.7	22.9	14.8	19.9	22.2	21.0	18.2	25.0
WAYSIDE		32.17	-0.6	24.9	27.8	29.2	32.0		23.5						23.0	16.8	20.4 [1]			14.2	21.0	23.3	22.5	18.2	26.9
OLD SPANISH TRAIL (OST)		28.47	-0.7	25.4	28.3	29.9	32.8								26.3		27.8	16.6	25.0	15.7	20.9	23.8	22.5	16.3	27.3
MARTIN LUTHER KING		36.47	-0.8	29.7	32.4	33.7	36.1				24.9	26.8			26.0	29.5	32.8	26.6	29.9	20.9	26.2	29.3	26.4	18.2	32.3
CALHOUN		33.41	-0.8	30.3	32.8	34.0	36.5	31.9	29.2	29.0					29.5	30.1	32.8	27.8	30.7	22.0	28.2	28.9	28.8	26.2	33.7
SCOTT		37.92	-1.0	31.6	34.4	35.7	37.9								31.3	32.3	32.4	29.7	31.5	24.0	29.4	32.1	30.5	28.4	35.2
ARDMORE		37.36	-1.1	32.8	35.4	36.6	38.9								33.9		38.0	31.9	32.8	25.8	31.2	34.3	29.1 [1]	30.6	37.4
SH 288		51.01	-1.2	33.6	36.4	37.8	40.1				30.4				34.8	35.2	39.3	33.9	33.6	26.7	33.0	35.2	34.2	31.7	39.2
ALMEDA RD		41.10	-1.2	34.4	37.6	39.1	41.9		35.1	34.5					36.2	34.7	37.5	33.9	35.0	27.1	33.7	37.0	36.0	32.3	40.4
D109 @ MACGREGOR	400	39.11	-1.2	34.9	38.2	39.9	43.0												34.0	N/A	36.1	38.0	37.4	35.3	41.5
HOLCOMBE BLVD		43.31	-1.2	36.3	39.4	41.1	43.9		37.4	37.3	33.8	38.4			38.2	36.7	40.3	36.7	37.2	30.7	36.5	38.2	37.7	34.9	41.7
S. BRAESWOOD BLVD.		43.68	-1.2	37.1	40.0	41.9	44.8								39.4		42.9	38.0	38.7	32.0	37.3	39.9	38.2	36.4	42.0
FANNIN		45.81	-1.3	38.4	41.2	43.3	46.6			38.9	34.7				41.0	38.5	44.0	37.8	39.4	34.0	37.9	40.1	39.5	37.5	43.5
GREENBRIAR		45.11	-1.3	39.2	41.7	43.8	47.4								40.7		42.2	39.9	39.4	35.0	38.7	41.3	40.4		44.4
N. BRAESWOOD BLVD.		47.58	-1.4	40.2	42.4	44.9	48.6								41.7		44.5	46.5	40.8	N/A	40.6	42.2	41.0		45.7
SOUTH MAIN	420	46.53	-1.4	41.0	43.1	45.7	50.0		41.2	41.5	37.4	42.4	38.8		42.2	39.6	42.9	40.6	41.3	36.5	40.5	42.9	42.1		45.7
S. BRAESWOOD		49.74	-1.3	41.4	43.7	46.6	50.1								42.7		44.3	42.0	41.9	36.3	39.9	43.1	42.4	40.5	45.9
KIRBY		44.30	-1.3	42.1	44.3	47.1	50.7		41.6	42.5					42.7	40.6	47.2	42.1	41.8	37.4	41.6	43.9	43.0		46.3
BUFFALO SPEEDWAY		49.48	-1.3	43.7	46.1	48.4	51.1		42.8		40.9				44.4	43.1	47.4	43.7	43.3	39.3	43.7	45.5	44.1	42.7	47.9
STELLA LINK	430	49.55	-1.7	45.5	47.5	49.6	51.8		45.1	46.1	42.7			45.0	46.0	44.3	48.4	46.4	45.9	43.0	45.7	48.3	47.1	45.7	49.7
SPRR		53.36	-1.7	47.2	49.5	51.3	52.6								47.8	46.3	49.4	47.1	46.5	44.0	47.2	49.1	47.7	46.8	50.7

NOTE: BRIDGE AND HIGH WATER ELEVATIONS ARE ON 1988 NAVD; 2001 ADJ

NOTE: D109 @ MacGregor added as a HWM location in summer of 2005

[1] = Suspect elevation, low confidence in field

Exceedance probability elevations are from the June 9th, 2006 TSARP Flood Insurance Study.
High water marks are approximate. HCFCD assumes no responsibility for their accuracy.

EXHIBIT F

TABLE OF CRITICAL FACILITIES AND ELEVATIONS

CITY OF WEST UNIVERSITY PLACE
WASTEWATER TREATMENT PLANT FLOOD MITIGATION STUDY
EXHIBIT F - TABLE OF CRITICAL FACILITIES AND ELEVATIONS

Equipment Unit	Elevation (2) (ft)	Elevation Subject to Damage from Flooding (ft)	(6/2007) 100-Year Floodplain Elevation (ft)	(6/2007) 500-Year Floodplain Elevation (ft)	500-Year Floodplain Elevation Plus 3-Feet (ft)	Hurricane Harvey High Water Elevation (ft)	Recommended Equipment Minimum Elevation (ft)	
Electrical Service	49.85 - 51.8	49.85 - 51.8	48.08	50.85	53.85	47.5	**53.85**	
Bottom of Generator/Top of Fuel Tank	52.77	52.77	48.08	50.85	53.85	47.5	**53.85**	(2)
Blower Equipment	49.58	50.4	48.08	50.85	53.85	47.5	**53.85**	
Chemical Feed Equipment	46.67	50.6	48.08	50.85	53.85	47.5	**53.85**	
Sludge Transfer Pumps	46.67	48.7	48.08	50.85	53.85	47.5	**53.85**	(2)
Influent Lift Station Top of Wall	46.67	46.67	48.08	50.85	53.85	47.5	**53.85**	
Electrical Control Building	47.31	48.15	48.08	50.85	53.85	47.5	**53.85**	
Belt Press	61.67	62.0	48.08	50.85	53.85	47.5	**No Change**	
Dewatering Sludge Pumps	46.67	48.0	48.08	50.85	53.85	47.5	**53.85**	(2)
NPW Pumps and Screens	48.20	50.70	48.08	50.85	53.85	47.5	**53.85**	
Top of WWTP Basin Walls	56.17	56.17	48.08	50.85	53.85	47.5	**No Change**	

Note:

1. Elevations referenced to NAVD 88, 2001 Adj.
2. This elevation represents the elevation of the equipment pad/bottom of equipment. This is not the elevation of the equipment that is subject to flood damage. However, this elevation of the portion of the equipment that would need to be raised in order to meet current agency criteria.
3. This equipment is not proposed to be improved/modified in the Master Plan and was not impacted by Hurricane Harvey flood waters (according to the City of West University Place operations staff). The equipment is not required by regulatory agencies to be raised at this time, so mitigation of this equipment is optional.

EXHIBIT G

PHOTOGRAPHS OF WWTP EQUIPMENT

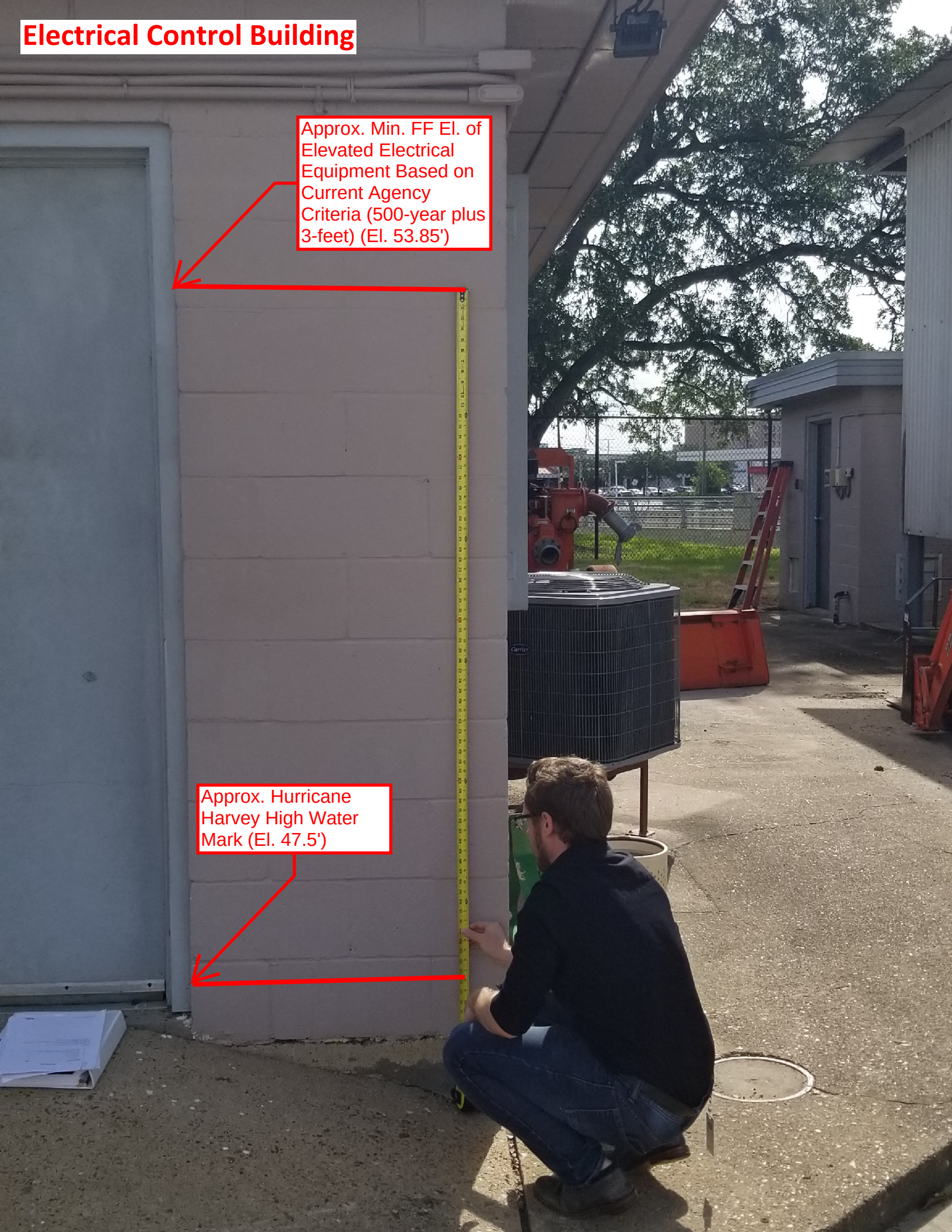
Electrical Control Building
Approx. Min. FF El. of Elevated Electrical Equipment Based on Current Agency Criteria (500-year plus 3-feet) (El. 53.85')
Approx. Hurricane Harvey High Water Mark (El. 47.5')

Motor Control Center




Electrical Control Panel
*Measuring tape was used for elevation in referenced to the slab elevation


Emergency Generator
*Measuring tape was used for elevation in referenced to the slab elevation

Electrical Distribution Panels



***Measuring tape was used for elevation in referenced to the slab elevation**

Main Circuit Breaker Panel and Automatic Transfer Switch



*Measuring tape was used for elevation in referenced to the slab elevation


Blowers


Chemical Feed Equipment
SIEMENS
SIEMENS
HALOGEN
CAUTION
Keep Cover
Closed & Sealed
SHUT OFF
*Measuring tape was used for elevation in referenced to the slab elevation

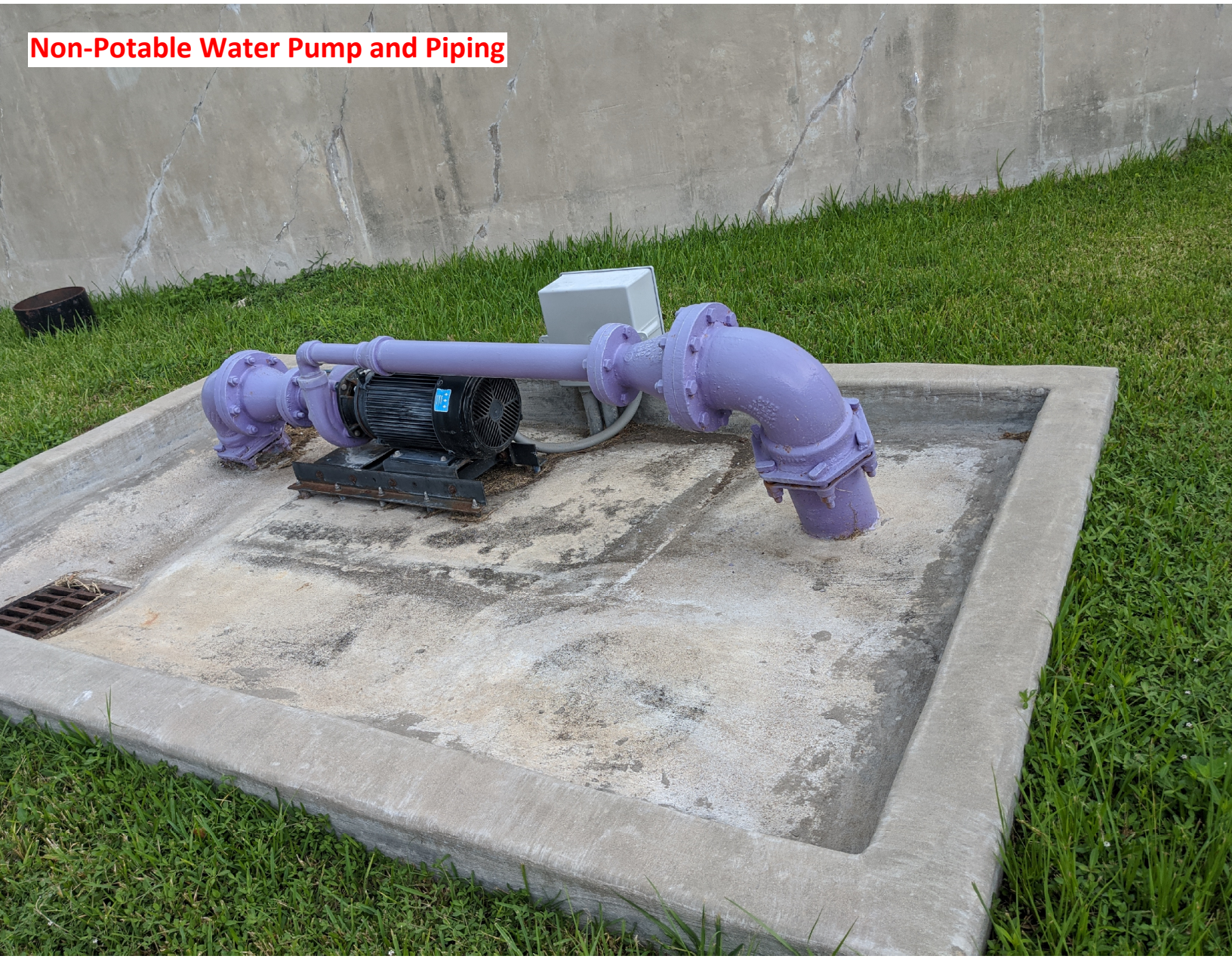
Non-Potable Water Pump and Piping

Non-Potable Water Pumps and Local Control Panels




Influent Lift Station and Screw Pumps

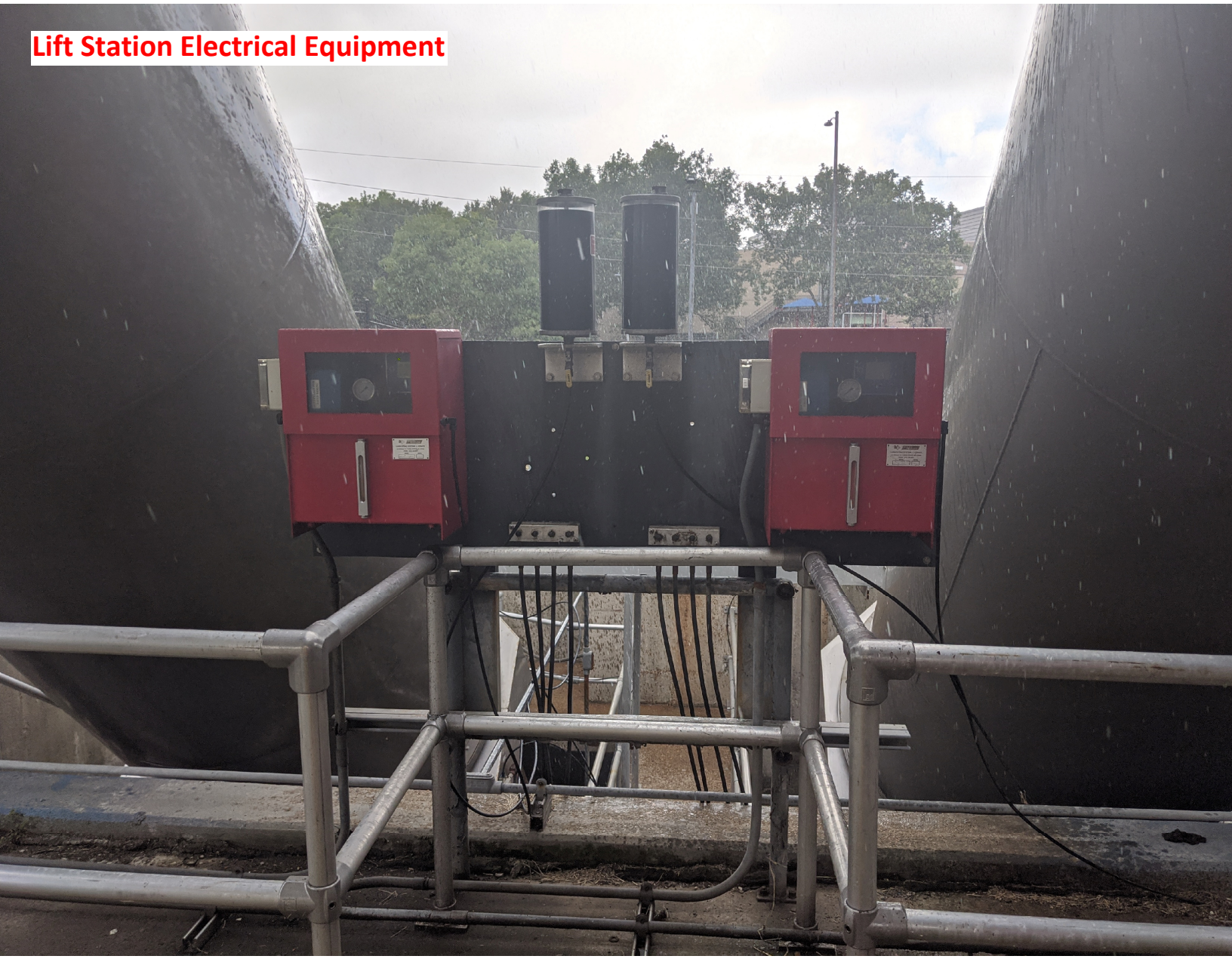
Lift Station Electrical Equipment


Sludge Dewatering Transfer Pumps and Electrical Panel


Sludge Dewatering Transfer Pumps

Appendix C: Equipment Technical Data

NP 3171 MT 3~ 435

Patented self cleaning semi-open channel impeller, ideal for pumping in waste water applications. Possible to be upgraded with Guide-pin® for even better clogging resistance. Modular based design with high adaptation grade.

FLYGT a xylem brand

Technical specification



Curves according to: Water, pure ,39.2 °F,62.42 lb/ft³,1.6891E-5 ft²/s

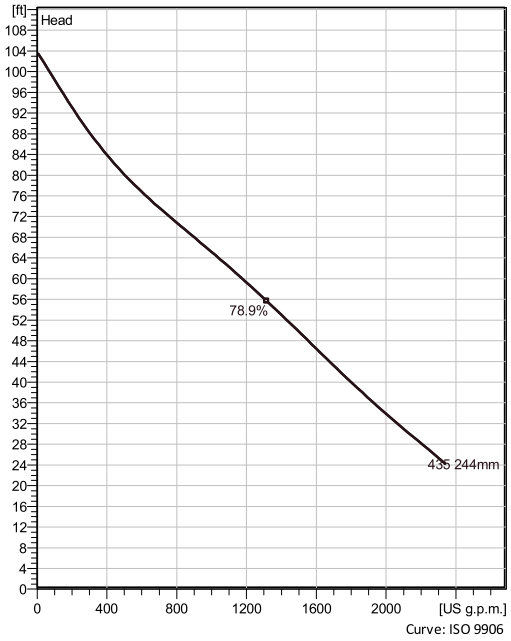

Curve: ISO 9906

Configuration

Motor number
N3171.185 25-14-4AA-W 25hp

Installation type
P - Semi permanent, Wet

Impeller diameter
244 mm

Discharge diameter
6 inch

Pump information

Impeller diameter
244 mm

Discharge diameter
6 inch

Inlet diameter
200 mm

Maximum operating speed
1755 rpm

Number of blades
2

Max. fluid temperature
40 °C

Materials

Impeller
Hard-Iron ™

Project	**Created by**	Whit Kelley	
Block	**Created on**	6/7/2021	**Last update** 6/7/2021

NP 3171 MT 3~ 435

Technical specification

FLYGT a xylem brand

Motor - General

Motor number N3171.185 25-14-4AA-W 25hp	**Phases** 3~	**Rated speed** 1755 rpm	**Rated power** 25 hp
ATEX approved No	**Number of poles** 4	**Rated current** 30 A	**Stator variant** 1
Frequency 60 Hz	**Rated voltage** 460 V	**Insulation class** H	**Type of Duty** S1
Version code 185			

Motor - Technical

Power factor - 1/1 Load 0.89	**Motor efficiency - 1/1 Load** 88.0 %	**Total moment of inertia** 3.26 lb ft²	**Starts per hour max.** 30
Power factor - 3/4 Load 0.86	**Motor efficiency - 3/4 Load** 89.5 %	**Starting current, direct starting** 183 A	
Power factor - 1/2 Load 0.78	**Motor efficiency - 1/2 Load** 89.5 %	**Starting current, star-delta** 61 A	

Project	**Created by**	Whit Kelley		
Block	**Created on**	6/7/2021	**Last update**	6/7/2021

NP 3171 MT 3~ 435

Performance curve

Duty point

Flow	Head
2110 US g.p.m.	30.8 ft

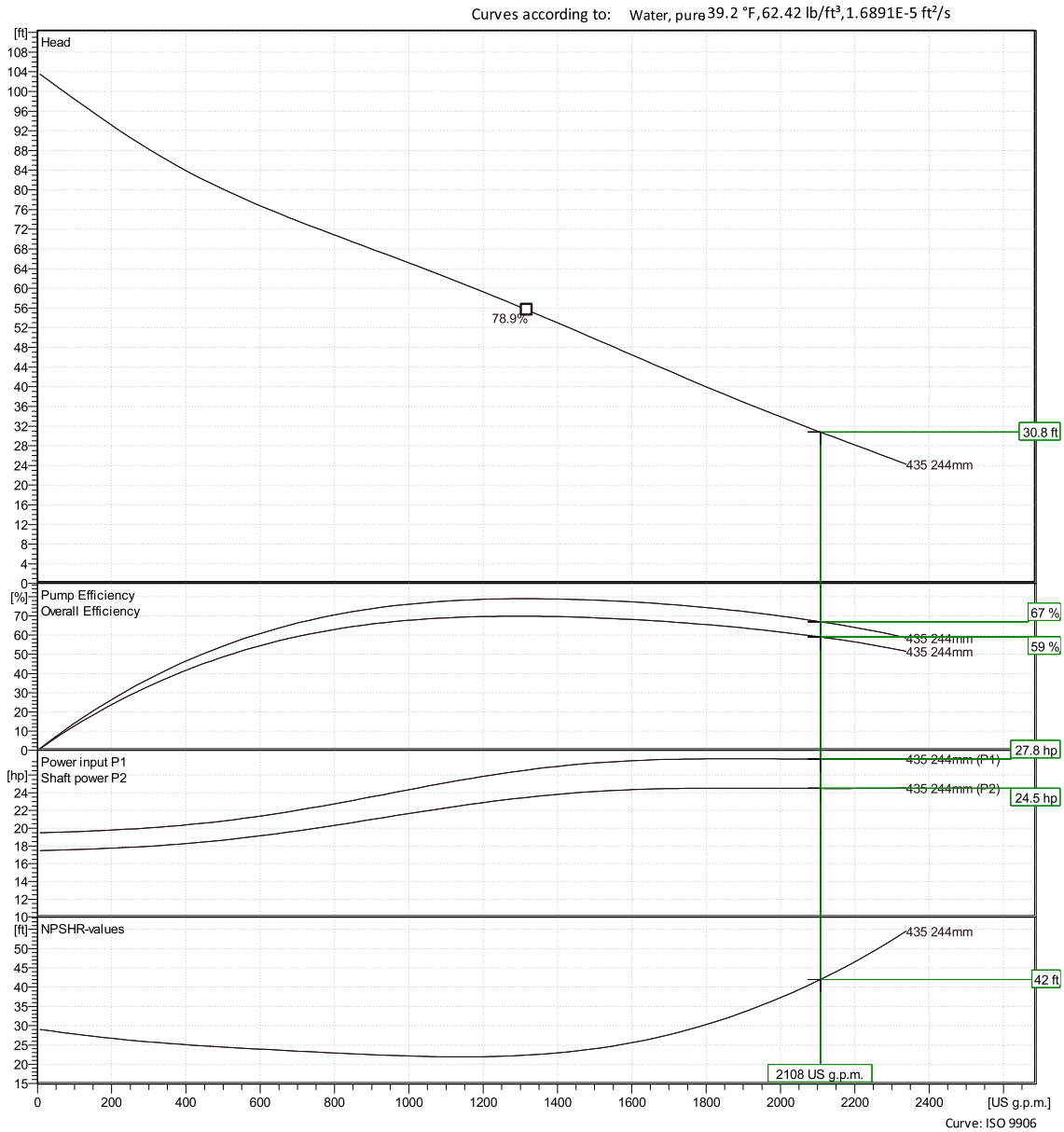

Project		**Created by**	Whit Kelley		
Block		**Created on**	6/7/2021	**Last update**	6/7/2021

NP 3171 MT 3~ 435

Duty Analysis

FLYGT a xylem brand

Curves according to: Water, pure ,39.2 °F,62.42 lb/ft³,1.6891E-5 ft²/s

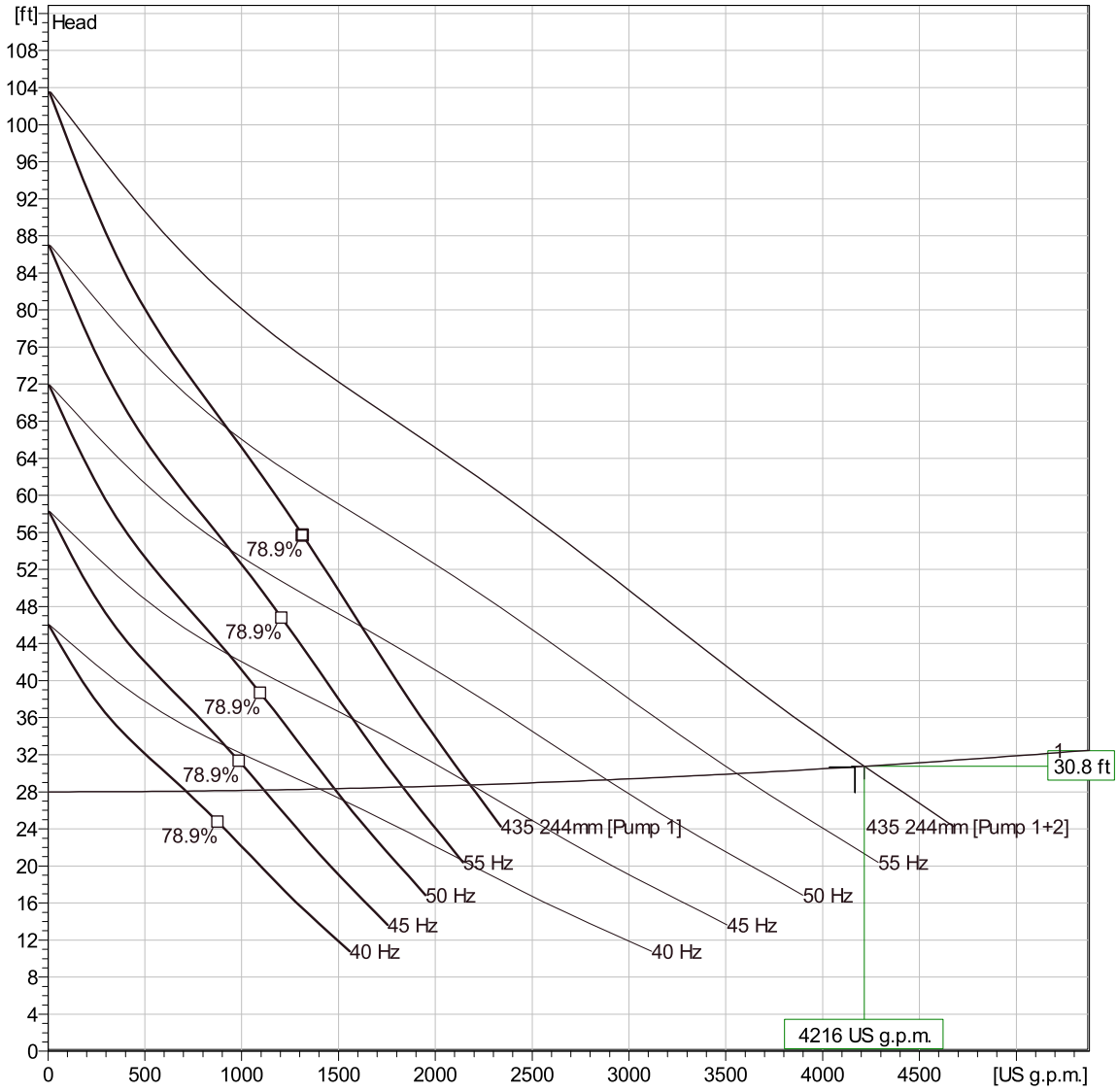

Operating characteristics

Pumps / Systems	Flow	Head	Shaft power	Flow	Head	Shaft power	Hydr.eff.	Specific Energy	NPSHre
2 / 1	2110 US g.p.m	30.8 ft	24.5 hp	4220 US g.p.m	30.8 ft	49 hp	67 %	164 kWh/US M	42 ft
1 / 1	2180 US g.p.m	28.7 ft	24.5 hp	2180 US g.p.m	28.7 ft	24.5 hp	64.7 %	158 kWh/US M	45.5 ft

Project		**Created by**	Whit Kelley		
Block		**Created on**	6/7/2021	**Last update**	6/7/2021

NP 3171 MT 3~ 435

VFD Curve

FLYGT a xylem brand

Curves according to: Water, pure, 39.2 °F, 62.42 lb/ft³, 1.6891E-5 ft²/s

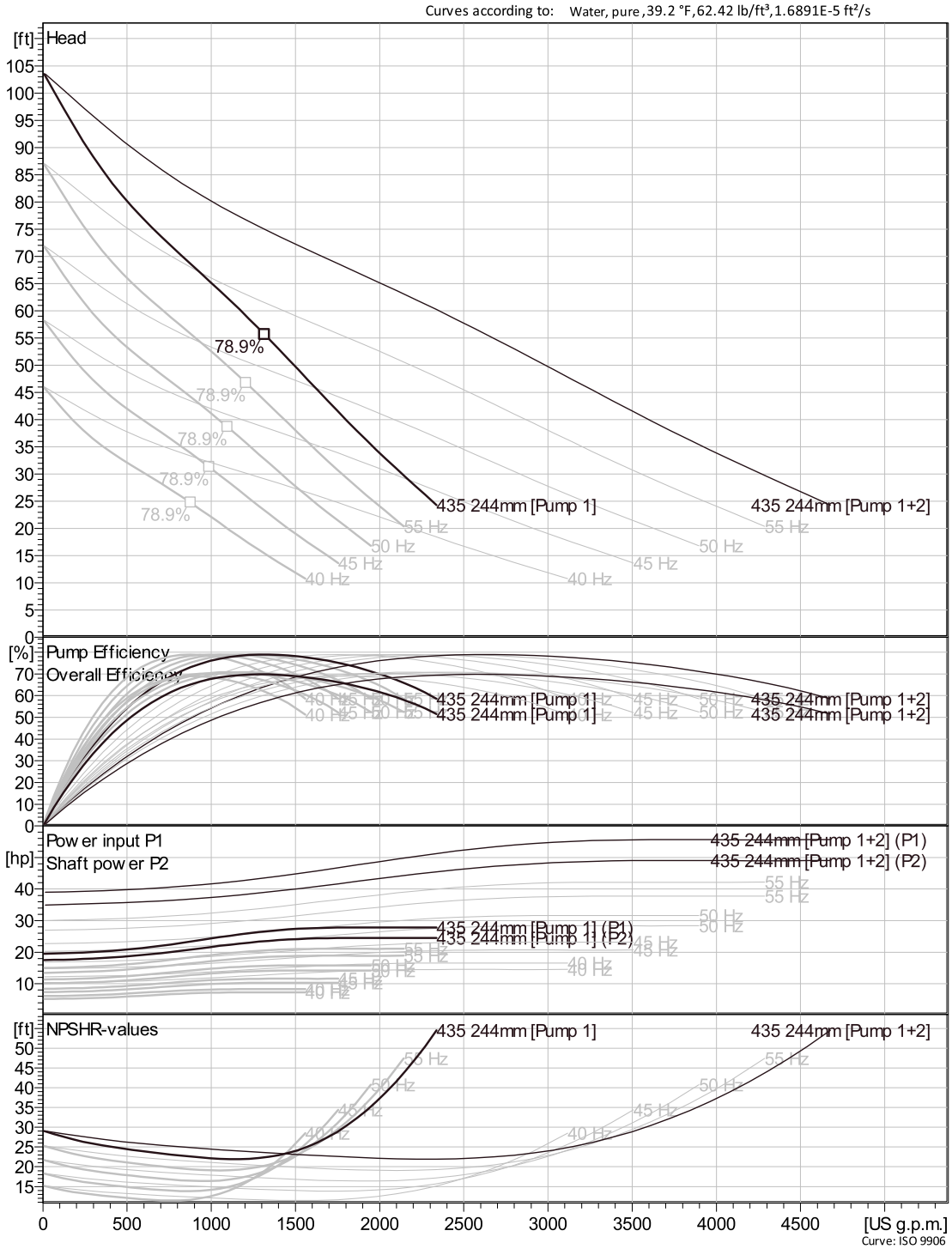

Curve: ISO 9906

Project		**Created by**	Whit Kelley		
Block		**Created on**	6/7/2021	**Last update**	6/7/2021

NP 3171 MT 3~ 435

VFD Analysis

FLYGT a xylem brand

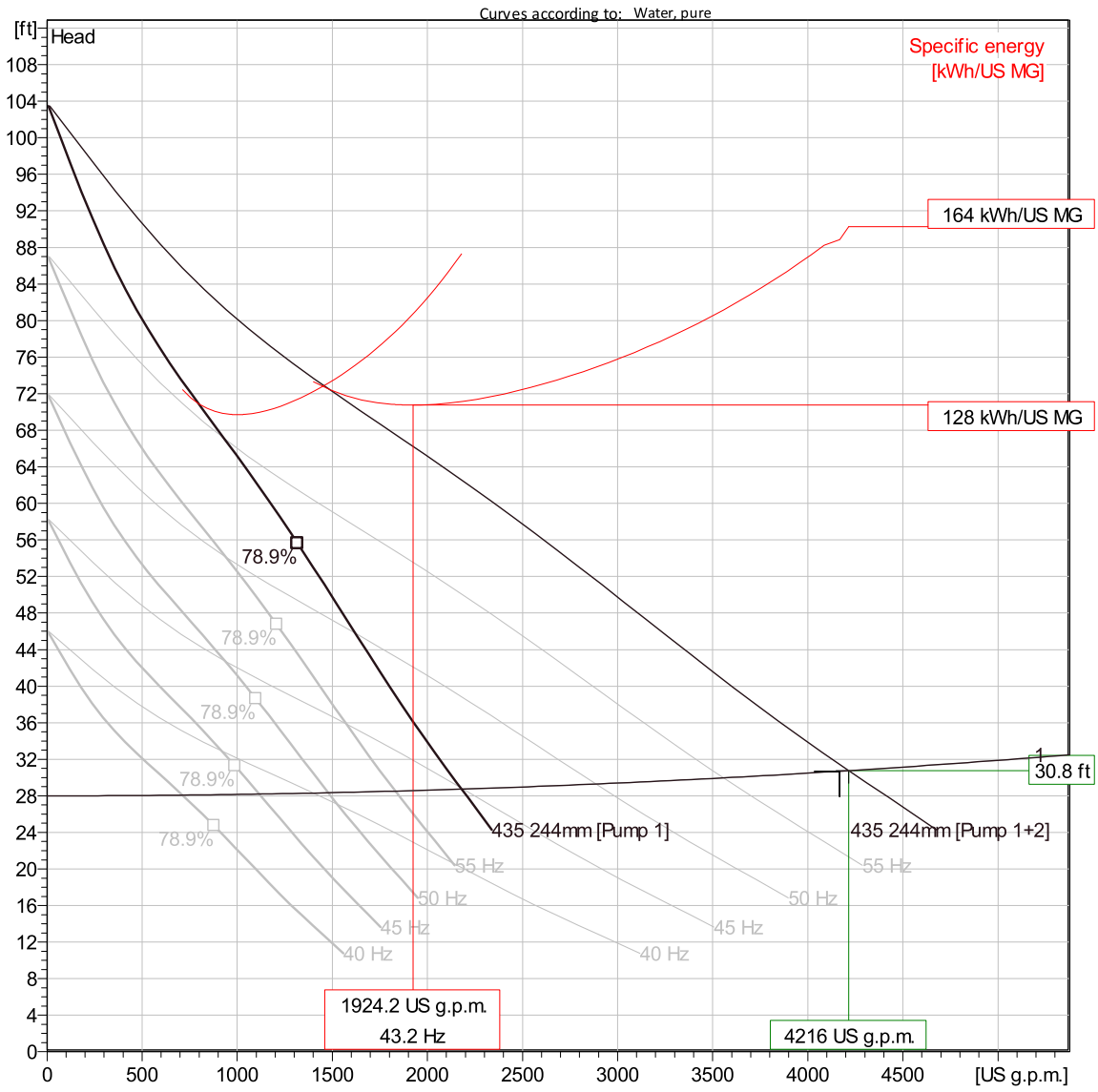

Operating characteristics

Pumps / Systems	Frequency	Flow	Head	Shaft power	Flow	Head	Shaft power	Hydr.eff.	Specific Energy	NPSHre
2 / 1	60 Hz	2110 US g.p.m	30.8 ft	24.5 hp	4220 US g.p.m	30.8 ft	49 hp	67 %	164 kWh/US M	42 ft
2 / 1	55 Hz	1780 US g.p.m	30 ft	18.9 hp	3560 US g.p.m	30 ft	37.8 hp	71.4 %	147 kWh/US M	30.4 ft
2 / 1	50 Hz	1440 US g.p.m	29.3 ft	14.2 hp	2890 US g.p.m	29.3 ft	28.3 hp	75.5 %	136 kWh/US M	21.2 ft
2 / 1	45 Hz	1090 US g.p.m	28.7 ft	10.1 hp	2190 US g.p.m	28.7 ft	20.3 hp	78.5 %	129 kWh/US M	14.8 ft
2 / 1	40 Hz	701 US g.p.m.	28.3 ft	6.52 hp	1400 US g.p.m	28.3 ft	13 hp	77 %	133 kWh/US M	11.5 ft
1 / 1	60 Hz	2180 US g.p.m	28.7 ft	24.5 hp	2180 US g.p.m	28.7 ft	24.5 hp	64.7 %	158 kWh/US M	45.5 ft

Project		**Created by**	Whit Kelley		
Block		**Created on**	6/7/2021	**Last update**	6/7/2021

NP 3171 MT 3~ 435

VFD Analysis

FLYGT a xylem brand

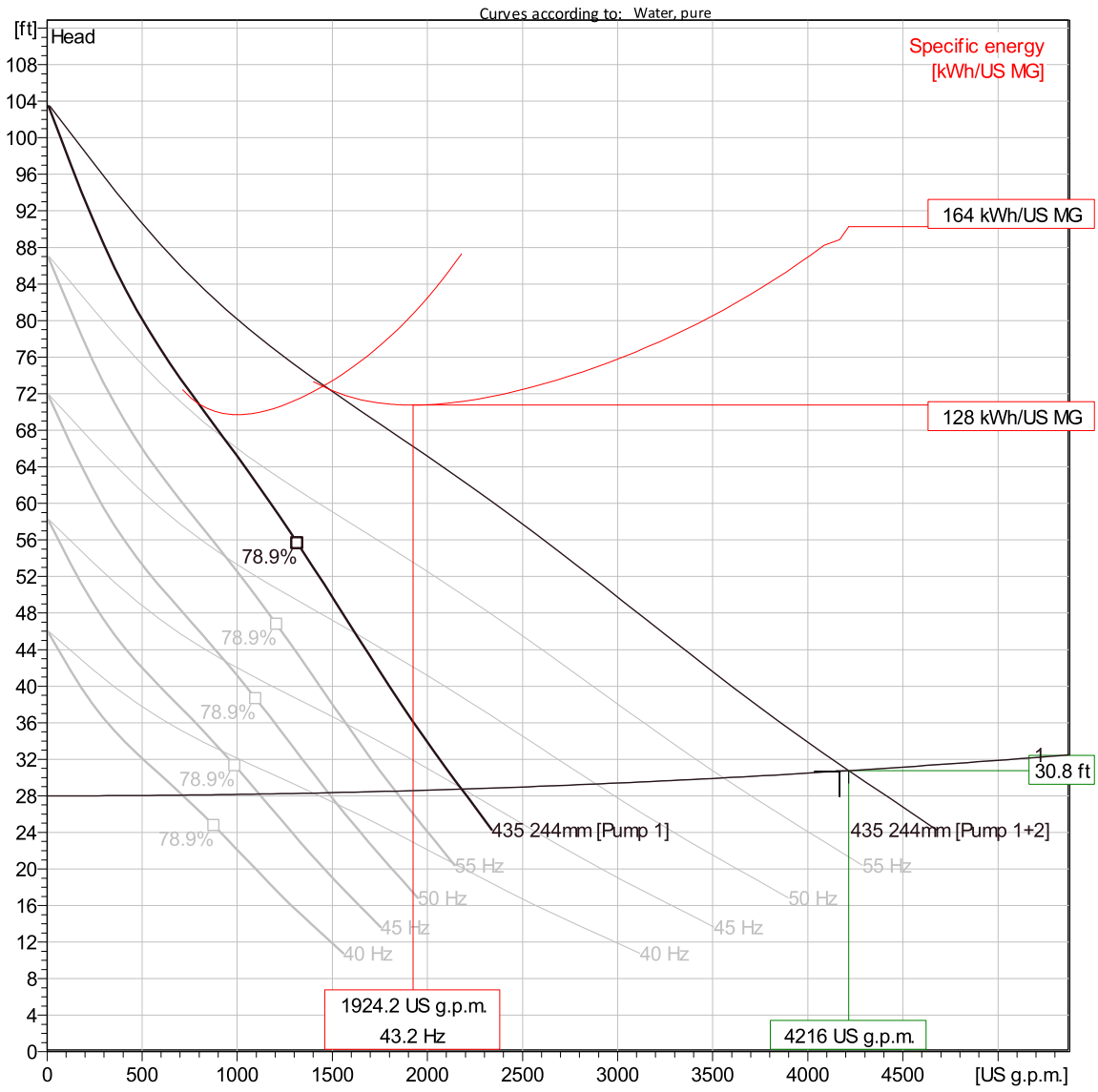

Operating characteristics

Pumps / Systems	Frequency	Flow	Head	Shaft power	Flow	Head	Shaft power	Hydr.eff.	Specific Energy	NPSHre
1 / 1	55 Hz	1830 US g.p.m	28.5 ft	18.9 hp	1830 US g.p.m	28.5 ft	18.9 hp	70 %	143 kWh/US M	32.3 ft
1 / 1	50 Hz	1480 US g.p.m	28.3 ft	14.2 hp	1480 US g.p.m	28.3 ft	14.2 hp	74.8 %	133 kWh/US M	22.1 ft
1 / 1	45 Hz	1120 US g.p.m	28.2 ft	10.2 hp	1120 US g.p.m	28.2 ft	10.2 hp	78.3 %	127 kWh/US M	15.1 ft
1 / 1	40 Hz	712 US g.p.m.	28.1 ft	6.55 hp	712 US g.p.m.	28.1 ft	6.55 hp	77.3 %	131 kWh/US M	11.5 ft

Project		**Created by**	Whit Kelley		
Block		**Created on**	6/7/2021	**Last update**	6/7/2021

NP 3171 MT 3~ 435

Dimensional drawing

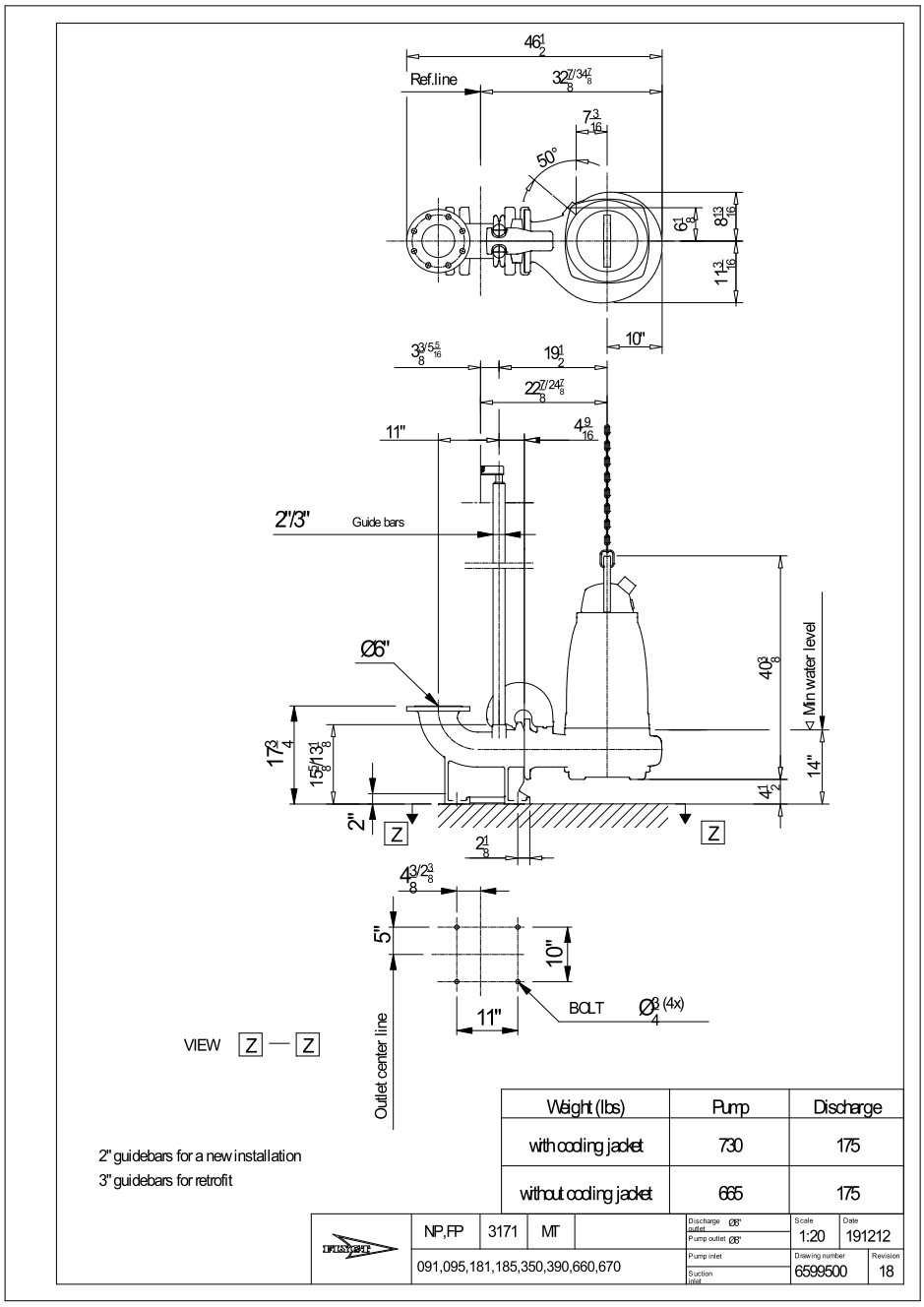

Project		**Created by**	Whit Kelley
Block		**Created on**	6/7/2021 **Last update** 6/7/2021

BUDGETARY PROPOSAL

HUBER TECHNOLOGY
WASTE WATER Solutions

Project Name: West University, TX

Date: May 28, 2021

Huber Contact:
Regional Sales Director: Johan van Ettekoven
Email Address: johan.vanEttekoven@hhusa.net
Phone Number: 704-677-3714

Represented By:
Representative Firm: Ei2
Representative Associate: Jeff Houston
Email Address: **jeff@ei2hou.com**
Phone Number: **281-728-8808**

Equipment: Step Screen Flexible

- Low Headloss Design
- Efficient Removal of High Screening Loading
- Low Lifetime O&M Costs
- No Lower Bearing
- Completely Enclosed

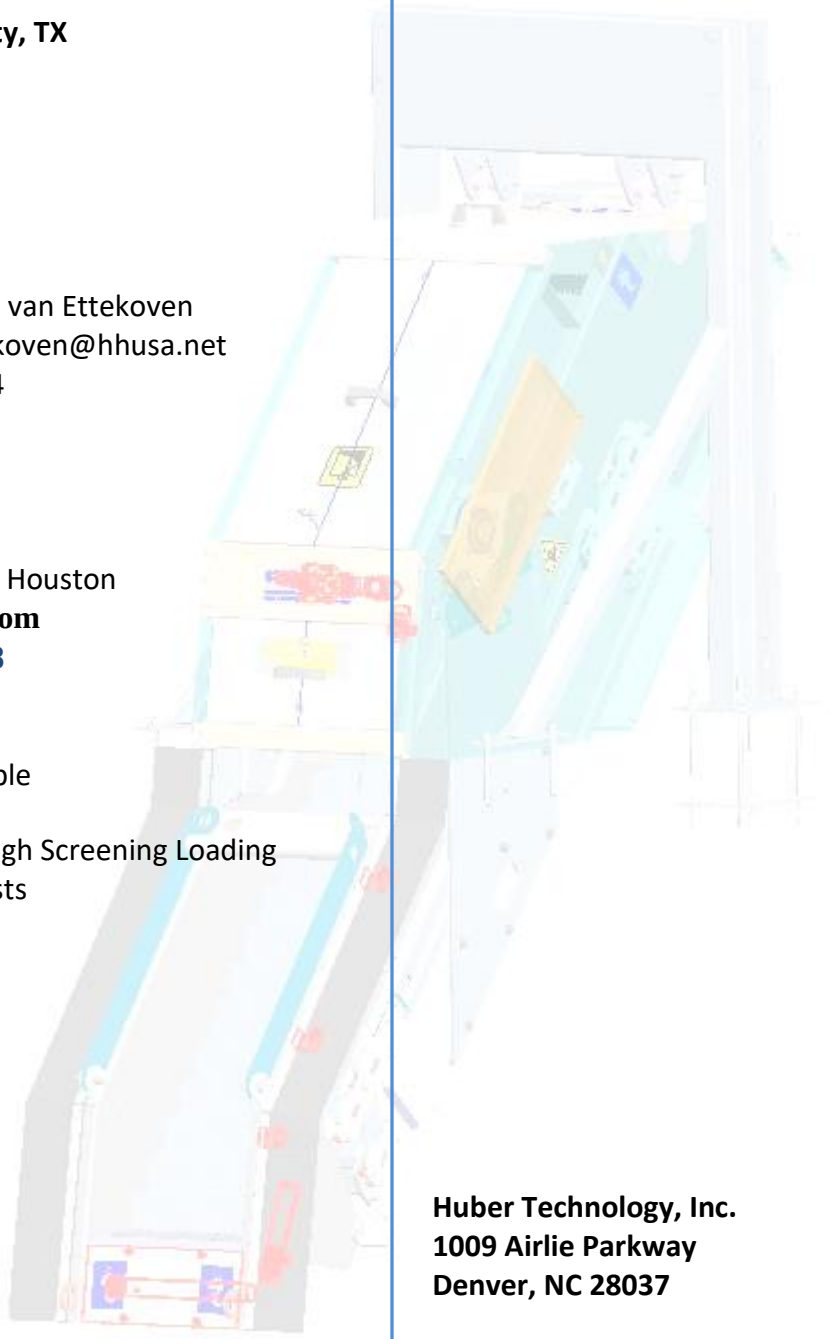

Huber Technology, Inc.
1009 Airlie Parkway
Denver, NC 28037

Phone: (704) 949-1010
Fax: (704) 949-1020

DESCRIPTION

Step Screen® Flexible Series
Model: One (1) x SSF-HF 3000x426/6

Hydraulic Information:
Peak Hour Design Flow: 6.0 MGD
DSWL During Peak Flows: 20.0”
Headloss Across Screen at 35% Blinding: 11.35”

Blinding	Headloss	Upstream Head	Velocity in Perforation
[%]	[inch]	[inch]	[ft/sec]
0	1.27	21	3.83
10	3.10	23	3.91
20	5.50	25	3.99
30	8.45	28	4.09
35	11.35	31	3.99
40	14.27	34	3.96

Design Information:
Channel Depth: 4.0’
Channel Width: 2.0’
Screen Width: 16.77” (426 mm)
Lamella Spacing: 1/4" (6 mm)
Inclination: 50°
Discharge Height Over Channel Invert: 6’-7”
Approximate Screen Weight: 2605 lbs

Including:

- 304 Stainless Steel Construction with Full Submersion Passivation for Superior Corrosion Resistance.
- Pivoting Support Frame in 304 Stainless
- Movable Lamella Thickness: 0.12” (3mm)
- Stationary Lamella Thickness: 0.08” (2mm)
- Screen Covers in 304 Stainless
- Class 1, Division 1 Motor, 2-HP, 480 VAC, 3 phase, 60 Hz, S.F. 1.15
- Control Panel, Including:
  - NEMA 4X 304 Stainless Steel Enclosure
  - Motor Starter, Non-Reversing, IEC w/ Overload and Fuse Branch Circuit [2HP]
  - **Optional NEMA Reversing Motor Starter [Press - 480VAC, 5HP Max]*
  - PLC: AB MicroLogix 1400
  - OIT: AB PanelView Plus 400 Color Touch
  - UL Label
  - Preprogrammed and Factory Tested
  - HydroRanger 200 Differential Level Controllers
  - One (1) 3-hole, NEMA7 LCS (Screen)
  - **Optional One (1) 4-hole, NEMA7 LCS (Press)*
- Standard Manufacturer’s Services and Freight to Site Included

HUBER Technology, Inc.
Huber Technology, Inc. · 1009 Airlie Parkway Denver, NC 28037
Phone (704) 949-1010 · Fax (704) 949-1020 · huber@hhusa.net · www.huber-technology.com

WAP Screening Wash Press
Model: One (1) xWAP 2



Design Information:
Throughput: 70ft^3/hr
Volume reduction of up to 70%
Weight reduction of up to 40%
Wash Water Demand: 13gpm @ 60psi
Approximate Weight: 530 lbs

Including:

- 304 Stainless Steel Construction with Full Submersion Passivation for Superior Corrosion Resistance.
- 304 Stainless Steel Screw Auger with Increasing Thickness and Nylon Brushes
- Class 1 Division 1 Motor, 5-HP, 480 VAC, 3 phase, 60 Hz, S.F. 1.15
- Perforated Drain In Washing and Compaction Zones with 3.5" Connection
- Support Legs
- Discharge Pipe with 8" ANSI Flange Connection
- Enclosed Feed Trough with Inspection Door
- Three (3) Washing Points with Two (2) Solenoid Valves, Class 1 Division 1, 2-way brass body, 110 VAC, 60 Hz

Budgetary Pricing:

EQUIPMENT	PRICE
Step Screen® Flexible Series	Included
WAP Screening Wash Press	Included
Total	***$175,000.00***

Technical Clarifications:

1. Equipment specification is available upon request
2. If there are site-specific hydraulic constrains that must be applied, please consult the manufacturer's representative to ensure compatibility with the proposed system
3. Electrical disconnects required per local NEC code are not included in this proposal
4. Huber Technology warrants all components of the system against faulty workmanship and materials for a period of 12 months from date of start-up or 18 months after shipment whichever occurs first
5. Budget estimate is based on Huber Technology's standard Terms & Conditions and is quoted in US$ unless otherwise stated
6. Huber has estimated the Control Panel cost based information provided with the RFQ. If control panel information is not provided with RFQ Huber will use a cost and scope of supply based on our standard panel. Huber reserves the right to change the price and scope at time of bid based on the final plans and specifications.

HUBER Technology, Inc.
Huber Technology, Inc. · 1009 Airlie Parkway Denver, NC 28037
Phone (704) 949-1010 · Fax (704) 949-1020 · huber@hhusa.net · www.huber-technology.com

PIVOTABLE VERSION

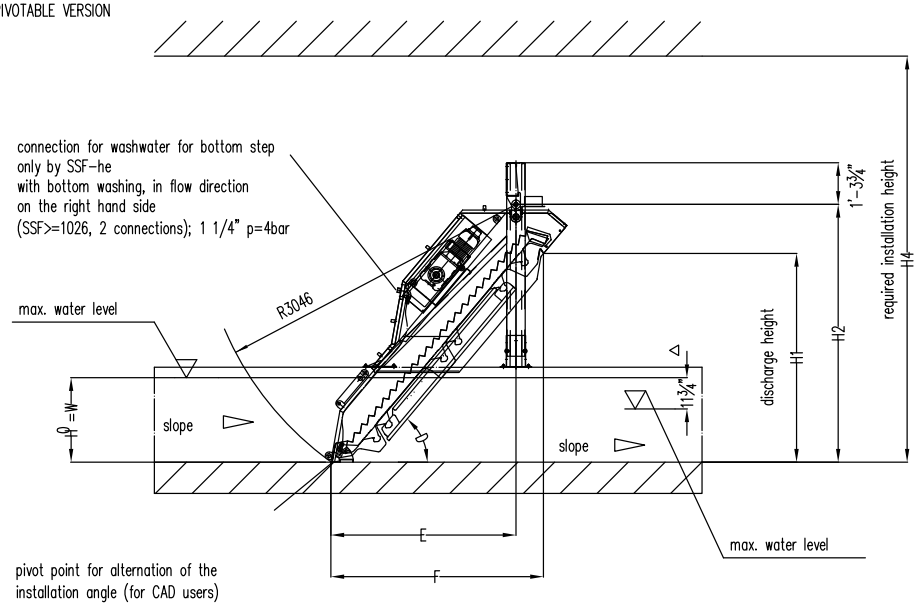

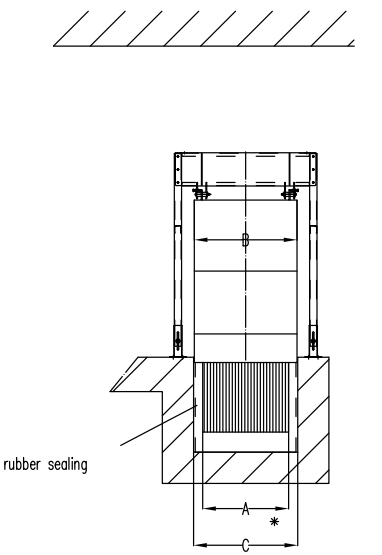

* channel width C -3/4" possible
(Note: special cover for SSF required!)

BASIC VERSION
(non pivot)

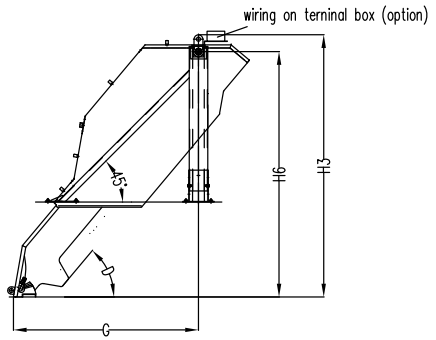

Additional Suggestion for hydraulic-improving
(only for SSF-he)

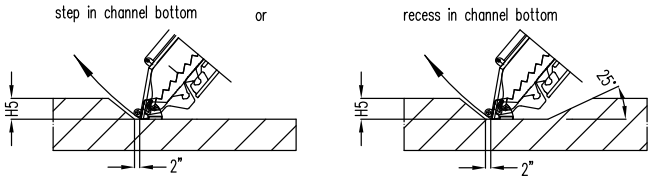

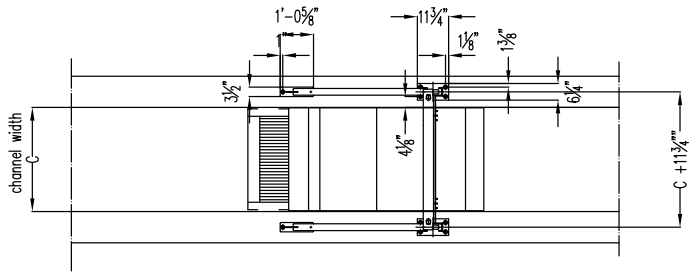

SSF 3000 x	426	526	626	726	826	926	1026	1126	1226	1326	1426	1526	1626	1726	1826
Bar Spacing (mm)	3|6	3|6	3|6	3|6	3|6	3|6	3|6	3|6	3|6	3|6	3|6	6	6	6	6
A	1'-4 3/4"	1'-8 3/4"	2'-5/8"	2'-4 5/8"	2'-8 1/2"	3'-1/2"	3'-4 3/8"	3'-8 3/8"	4'-1/4"	4'-4 1/4"	4'-8 1/8"	5'-1/8"	5'-4"	5'-8"	5'-11 7/8"
B	1'-11 1/8"	2'-3"	2'-7"	2'-10 7/8"	3'-2 7/8"	3'-6 3/4"	3'-10 3/4"	4'-2 5/8"	4'-6 5/8"	4'-10 1/2"	5'-2 1/2"	5'-6 3/8"	5'-10 3/8"	6'-2 1/4"	6'-6 1/4"
C	2'-0"	2-4"	2'-8"	3'-0"	3'-4"	3'-8"	4'-0"	4'-4"	4'-8"	5'-0"	5'-4"	5'-8"	6'-0"	6'-4"	6'-8"

trapezoidal channel in front of SSF

These anchor bolts are only permissible
in non cleft concrete with a resistance
of >=B25<=B55; reinforcement according to
structural requirements

Note:
Channel walls must be absolutely vertical in
the area of the screen. In the area of the
screen bottom plate the channel must be
plane with a max. tolerance of +/- 3mm.

SSF 3000										
D	H1	H2	H3	H4	H5	H6	E	F	G	W
40°	5'-3 7/8"	7'-0"	7'-1 5/8"	10'-6"	6 7/8"	6'-7 3/8"	7'-1 7/8"	7'-8 7/8"	7'-1"	3'-7 1/4"
45°	5'-11 3/4"	7'-7 1/8"	7'-8 3/4"	11'-1 7/8"	7 1/4"	7'-2 3/8"	6'-6 1/4"	7'-2 7/8"	6'-5 3/4"	4'-3 1/8"
50°	6'-6 7/8"	8'-1 1/2"	8'-3 1/4"	11'-5 3/4"	7 5/8"	7'-8 3/4"	5'-10"	6'-8 3/8"	5'-10"	4'-7 1/8"
53°	6'-11"	8'-5"	8'-6 5/8"	11'-9 3/4"	7 7/8"	8'-1/4"	5'-4 3/4"	6'-4 1/8"	5'-5"	4'-11"

H5 optimum depth of bottom step
W water level

Water level calculated for a pressure difference of Δ h=11¾"

HUBER TECHNOLOGY
9735 NorthCross Center Court, Suite A
Huntersville, NC 28078
Tel. 704-949-1010
info@huber-technology.com

Stepscreen® Flexible 3000

Fig No.	Dimesional Sheet	Scale:
1/1		1/4" = 1'-0"
Project No.		Drawing No. SSF 3000_2010.dwg

conversion date: 02/04/2010

HUBER TECHNOLOGY
WASTE WATER Solutions

STEP SCREEN® Flexible SSF

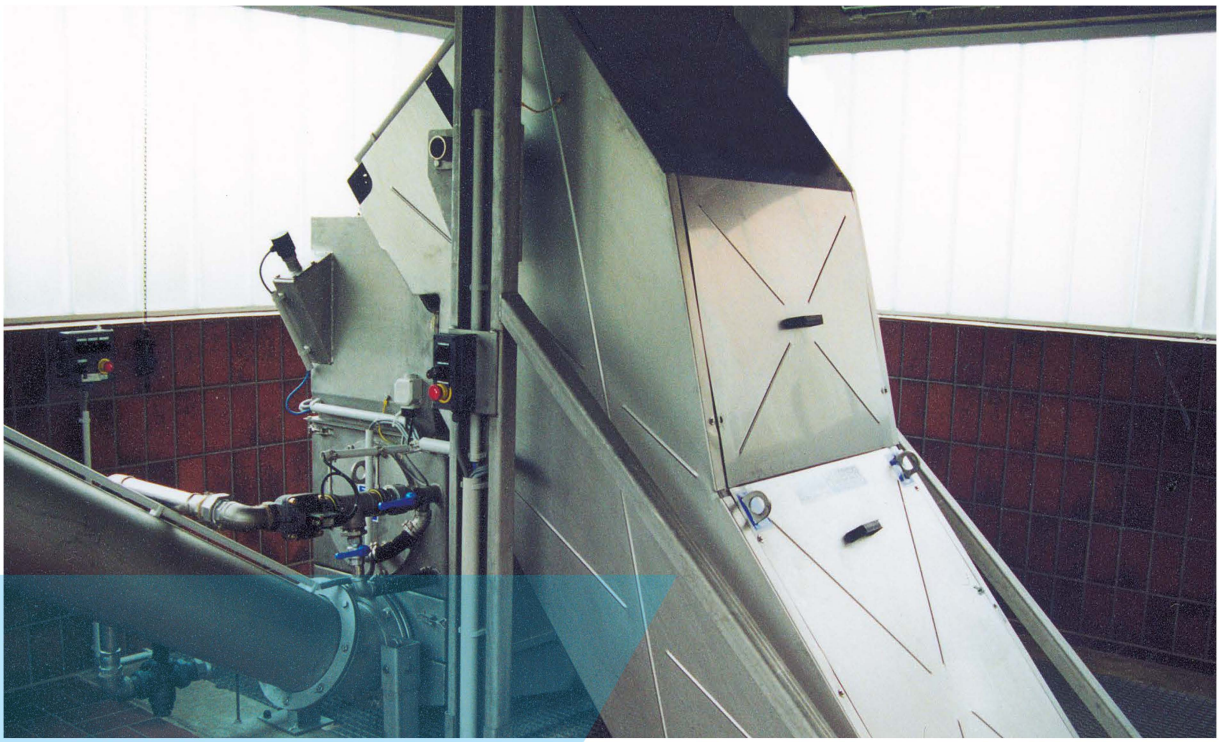

- for deep channels
- for high flows and low head loss
- for high screenings loads
- for lifting of screenings from the channel bottom
- for reliable operation and long life

HUBER – The World Leader

With over 12,000 installations worldwide we are the unrivaled market leader as supplier of headworks equipment. No other screen supplier has comparable experience and expertise. We have thousands of STEP SCREEN® installations.

The STEP SCREEN® System

The STEP SCREEN®, invented by HUBER-Hydropress, has been so successful because of its simple and self-cleansing function. STEP SCREENS® are not only highly efficient screens, but at the same time conveyors for gentle lifting and discharging of the screenings. They are suitable for deep channels; they handle high hydraulic and solids loads; and they are easy to operate and maintain.

STEP SCREEN® Flexible – SSF

The SSF is installed in channels with an inclination between 40° and 53°. This variable inclination permits optimal adjustment to site conditions, such as channel depth and space constraints. Its discharge height is up to 11.5 ft (3.5 m) above the channel floor. The SSF has a linkage system with lubrication-free bearings, defining the exact and parallel movement of the lamellae over their entire length. Use of difficult-to-maintain chains and sprockets and water contamination by oil and grease is thus avoided

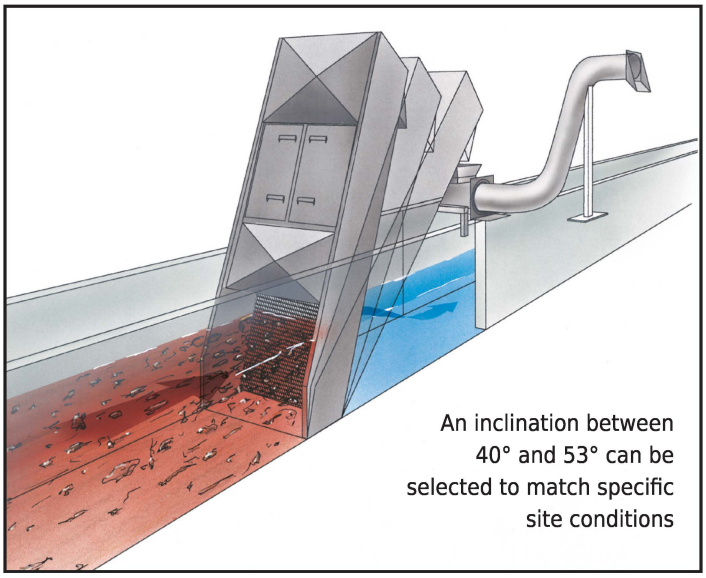

An inclination between 40° and 53° can be selected to match specific site conditions

Operating principle

Phase 1

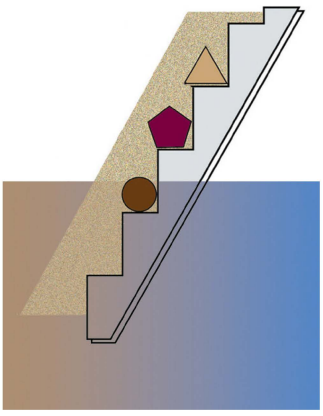

Screenings are retained on the steps and form a mat.

Phase 2

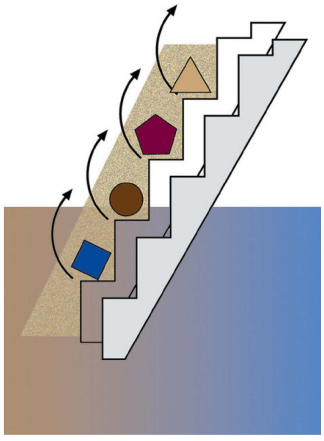

The complete screenings mat is lifted and transported, one step at a time, by rotation of the movable lamellae.

Phase 3

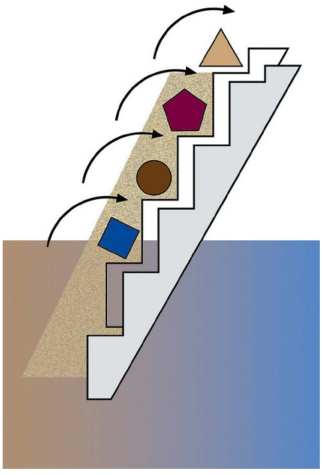

Phase 4

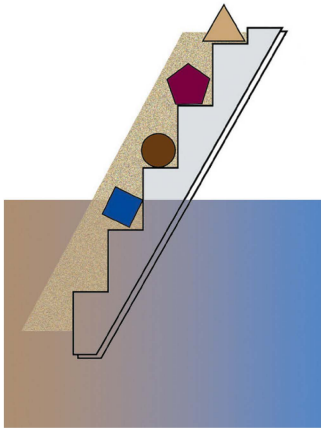

The screenings mat is laid down on the next step.

Advantages of a screenings mat

The screenings mat or carpet forms a filter retaining particles that are smaller than the width of the spaces between the lamellae. The solids capture rate of the SSF is thus further improved. The structure of the mat keeps the screenings together as they travel to the discharge point.

SSF – HE Version

It has always been our main objective to reduce operation and maintenance work to a minimum, and to improve the reliability not only of our headworks equipment, but also of all downstream treatment processes.

The SSF-HE, when installed in channels without a bottom step or recess, has a vertical plate in front of the lowest step. Grit and gravel settles in front of this plate and should be removed from time to time. Installation of a bottom flap, as done by some competitors and intended for flushing grit and gravel through the bottom of the screen when opened, is no solution. Such flaps are hardly operable due to grit jamming. If they could be opened, coarse solids would be flushed through the open flap thus defeating the screen's purpose of protecting downstream equipment and processes from coarse and impairing material.

We have developed an optimal bottom step design for the SSF-HE screen preventing grit and gravel sedimentation and guaranteeing removal of rocks and gravel. The lowest step of the SSF-HE is flush with the channel floor. A horizontal plate extends from the channel floor to the edge of the first step, directing wastewater and solids onto the first step. The lowest step of the fixed lamellae is doubled up with stainless steel plates thus reducing its spacing. Gravel and rocks are thus retained on the lowest step. They are lifted up and removed when the lamellae rotate. Sedimentation in front of the screen is thus eliminated.

The SSF-HE is provided with a flush pipe for automatic and periodic flushing of grit that has settled underneath or behind the screen.

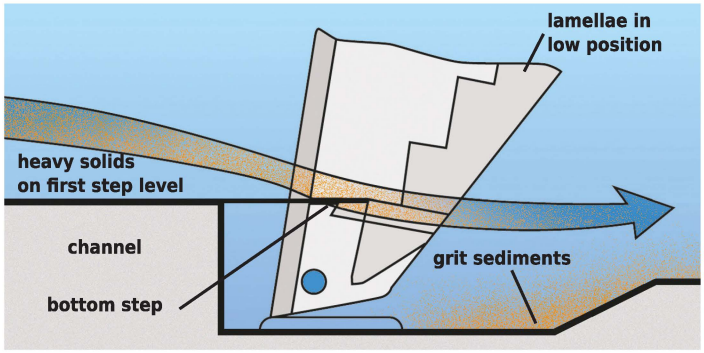

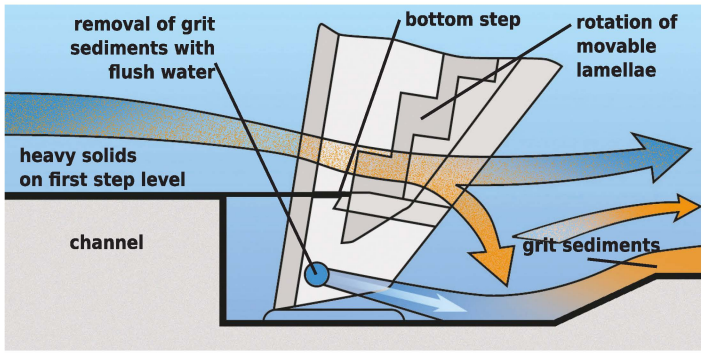



STEP SCREEN® with optimal bottom step design. The channel floor is flush with the top of the lowest step.

SSF – HF Version

The SSF-HF does not have a vertical plate in front of its lowest step. It therefore has the largest open area, the highest flow capacity and the lowest head loss off all screens of this type.

While the movable lamellae rotate, they are removed from the lowest step for a short period of time. Edges of the movable lamellae engage the screenings and lift them to the next steps. The increased flow through the fixed lamellae flushes grit and gravel through the bottom of the screen. A flush pipe is not required.

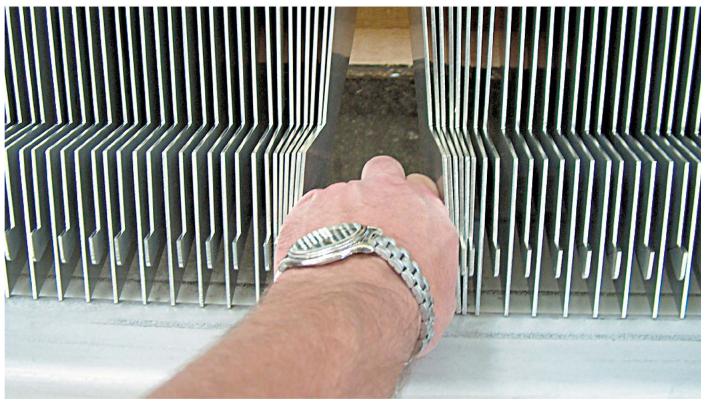

Flexible 0.08" (2 mm) thick lamellae at the bottom of the SSF-HF

HUBER TECHNOLOGY
WASTE WATER Solutions

Benefits

Operational Principle

- Gentle and complete lifting of screenings and rocks from the channel floor

Variable Inclination

- Adjustable to site conditions

Outstanding Hydraulics

- Highest flow / lowest head loss of its class

Great Capture Rate

- High separation efficiency due to narrow slots, further improved by formation of screenings mat

Cleaning

- Self-cleansing design. No spray water or brushes are needed.

Odor Control

- Fully enclosed screen

Maintenance

- No need for regular lubrication

Reliability

- Low susceptibility to jamming by grit, gravel and rocks;
- Overload-protection with rocker arm and proximity switch

Durability

- Sturdy design
- Made of stainless steel, pickled in an acid bath

Experience

- Unsurpassed for more than 20 years; thousands of Installations

Technical data

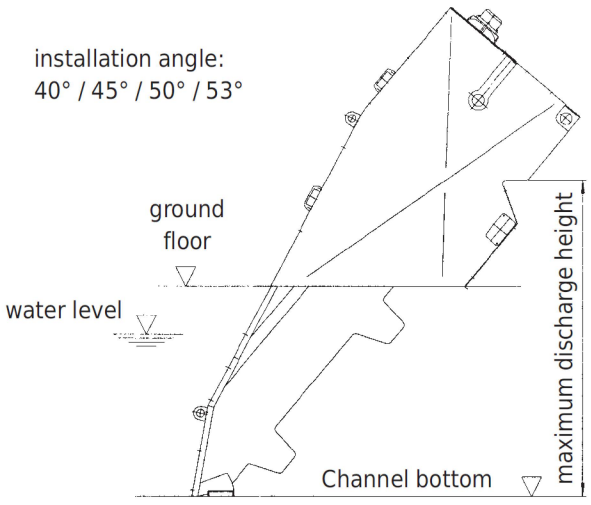

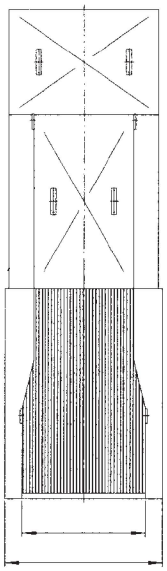

Flow:	up to 60 MGD per unit	Water level:	max. 7.5’ (2.3 m)
Inclination:	40° to 53°	Spacing:	1/8” or 1/4” (3 or 6 mm)
Discharge height:	max. 11.5’ (3.5 m)	Lamella thickness:	0.08” / 0.12” (2 / 3 mm)
Channel width:	20” to 6.5’ (0.5 to 2 m)		

HUBER TECHNOLOGY, Inc.
1009 Airlie Pkwy, Denver, NC 28037
Phone: 704-949-1010 - Fax: 704-949-1020
huber@hhusa.net - http://www.hubertechnology.com

Subject to technical modification
0,0 / 9 – 11.2012 – 9.2004

STEP SCREEN® Flexible

HUBER TECHNOLOGY
WASTE WATER Solutions

HUBER WAP
Screening **W**ash **A**nd **P**ress



Washing, dewatering and compaction of screenings

- Dewatering performance of up to 40% DS
- Weight and volume reduction by up to 70%
- Sturdy machine, made of stainless steel

HUBER TECHNOLOGY
WASTE WATER Solutions

Features

Wet screenings drop directly from a screen or indirectly from a conveyor into the hopper of the WAP. A shafted and sturdy conveying and compacting screw at its bottom moves the screenings through a wash zone and into a press zone.

In the wash zone, several powerful water jets are directed on the screenings for intensive washing and rinsing. Service water can be used. Washing intensity and cycles are individually adjustable. Fecal and other organic matter are washed away. Wash water drains through perforations at the bottom of the wash zone. The screw pushes the washed screenings further into the press zone. Here the screenings form a plug. The screw forces this plug through a tube with a bend. High pressure is thus created by friction and distortion. Water is pressed through perforations in the tube. The screenings are dewatered and compacted to 30 - 40% DS.

The plug of washed and compacted screenings is pushed through a slightly conical and inclined discharge pipe and drops into a container.

Wash water from the wash and press zones is collected in a trough. Another water connection permits rinsing of the trough. Polluted wash water is returned to the wastewater flow. Its high BOD content facilitates denitrification processes.

Benefits

- Dewatering performance of up to 40% DR (prior grinding does not improve the performance; grinder costs should be saved)
- Weight reduction up to 70%
- Capacity of up to 400 ft3/hr (12 m3/h) of wet screenings
- Designed to handle coarse material
- Service water can be used as wash water
- Hopper length can be adjusted to individual needs
- Completely made of stainless steel
- Passivated by full submergence in an acid bath for perfect finishing and corrosion protection

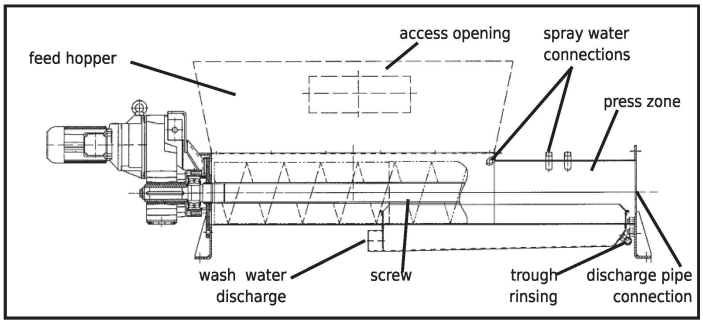



WAP saving screenings disposal costs



WAP with a large hopper, fed via a screw conveyor

HUBER TECHNOLOGY, Inc.

1009 Airlie Pkwy, Denver, NC 28037
Phone: 704-949-1010 - Fax: 704-949-1020
huber@hhusa.net - http://www.hubertechnology.com

Subject to technical modification
0,0 / 3 – 11.2012 – 5.2011

HUBER Wash And Press WAP

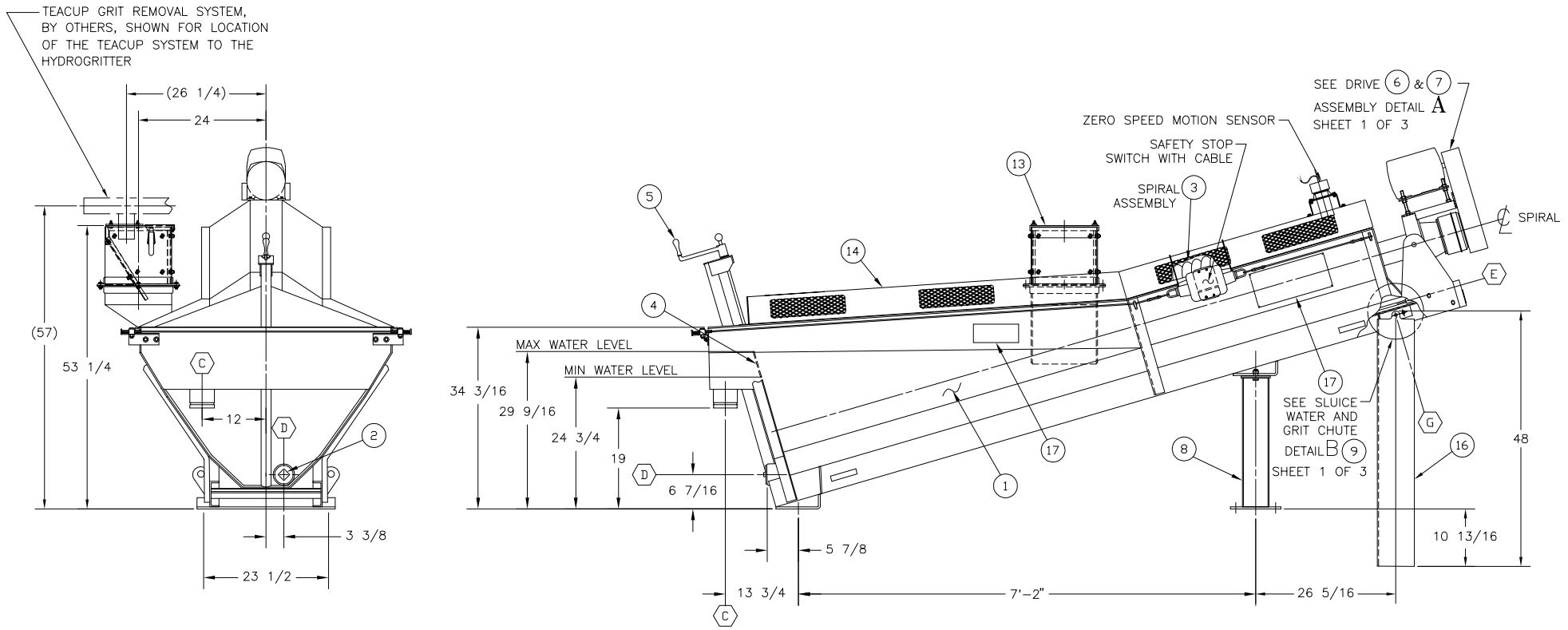

18" HYDROGRITTER WITH INLET FROM THE TEACUP GRIT REMOVAL SYSTEM TO THE FEEDBOX

THIS DRAWING CONTAINS CONFIDENTIAL INFORMATION AND IS THE EXCLUSIVE PROPERTY OF ENVIROTECH PUMPSYSTEMS, D.B.A. WEIR SPECIALTY PUMPS. IT MAY NOT BE COPIED OR REPRODUCED IN ANY FORM WITHOUT THE EXPRESS WRITTEN AUTHORITY OF WEIR SPECIALTY PUMPS.

COPYRIGHT 2008 ENVIROTECH PUMPSYSTEMS, INC. ALL RIGHTS RESERVED.

CAD NO. dw07166aab	SHEET 2 OF 3		
SCALE 1:10	SIZE D	08DW07166AA	REVISION
CHG 080819.1309	5.80		

DRAWING NO. 08DW07166AA

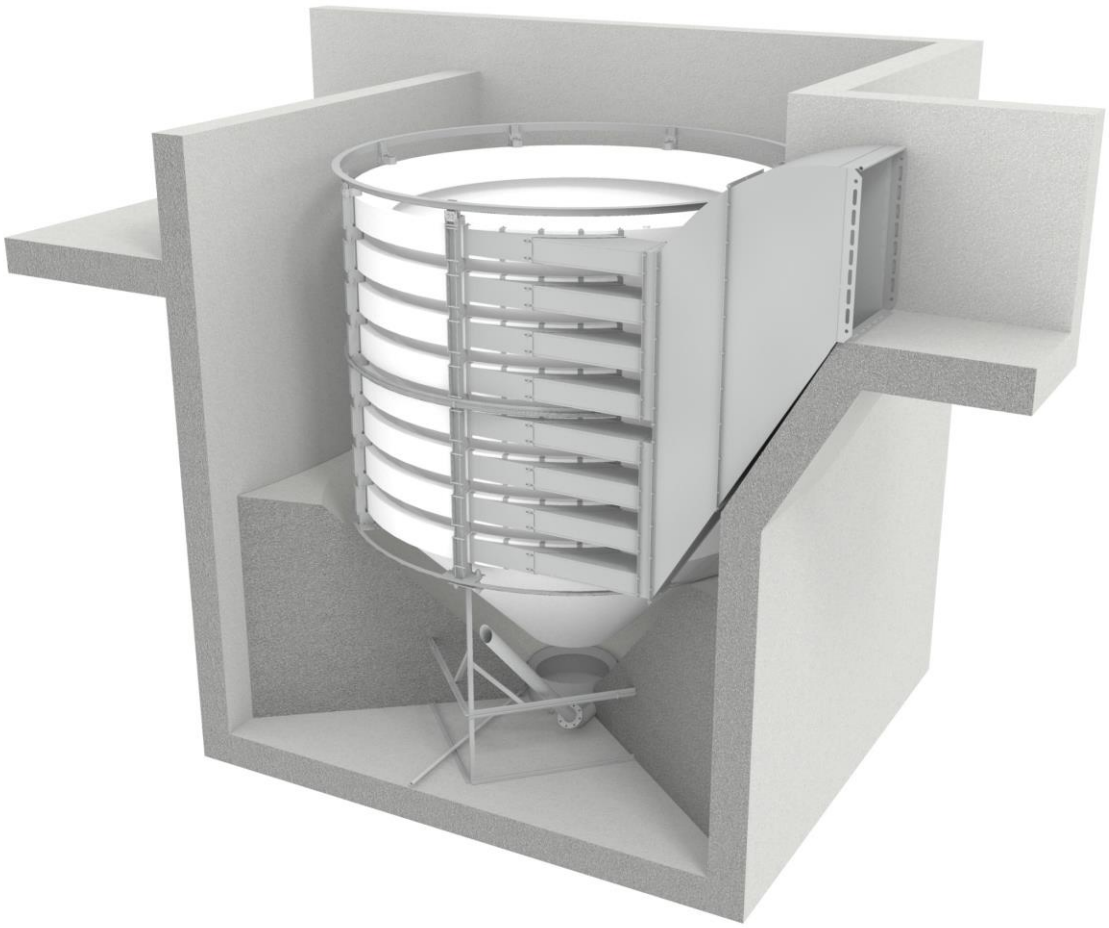

Grit Removal System Proposal Package
Houston, TX West U WWTP
Kimley-Horn

Manufacturer

Hydro International
2925 NE Aloclek Suite 140
Hillsboro, OR 97124
(866) 615-8130 ph
(503) 615-2906 fax
hydro-int.com

Representative

HRM Environmental
8000 Caribou Parke Cove
Austin, TX 78726
(512) 903 5444 ph

Water & Wastewater Solutions

June 4, 2021

Mr. Michael Moriarty, P.E.
Kimley-Horn
11700 Katy Fwy Ste 800
Houston, TX 77079

RE: Headworks Grit Removal System
Houston, TX West U WWTP
File #21_11_0290-A

Dear Mr. Moriarty:

Thank you for your interest in Hydro International. We are pleased to present our proposal for a HeadCell® Grit Removal & Classification System. Hydro International is dedicated to providing innovative, high performance advanced grit management systems grit removal equipment. Supported by over 30 years of research, testing both in our lab and in the field, product development and superior engineering we pride ourselves on providing high-quality products and unmatched customer service. Our extensive experience includes thousands of installations throughout the world.

Grit is continually introduced into collection systems but is not uniformly carried to treatment facilities. As flows increase, the grit load entering the plant elevates. Once in the treatment plant, where velocities are slower, grit will deposit in processes, disrupting systems, decreasing equipment longevity, and increasing maintenance costs. The HeadCell® Grit Removal System offers many benefits over conventional grit removal systems including:

- Removing fine and slowly settling grit, protecting equipment and processes from abrasive wear and sedimentation
- All-hydraulic design with no moving parts, minimizing operating and maintenance costs
- Small footprint yet capable of high efficiency solids capture and removal
- Robust design allowing long component life with minimal wear

We sincerely appreciate your interest in our equipment and look forward to working with you on this project. As you progress with the design, we can quickly generate CAD drawings, budget updates, and specifications as well as provide review of equipment layouts and specifications for your particular application. Reference lists are available through your local representative. If you have any questions or concerns, do not hesitate to contact us.

Regards,
Hydro International



Sam Randall
Applications Engineer

Hydro International
2925 NE Aloclek Suite 140 · Hillsboro, OR 97124
Tel: (866) 615-8130 Fax: (503) 615-2906 Web: hydro-int.com

Performance Objective

Hydro International is pleased to propose the following HeadCell® grit removal and classifying system to be installed in an existing plant which has flows of 1.2 mgd average and 6 mgd peak. Each component of the grit removal systems performance shall be outlined below.

Proposed Equipment Summary

HeadCell® Grit Concentrator Unit

The HeadCell® is an all-hydraulic grit concentrator, which uses vortex flow and a stacked tray design to efficiently capture and settle fine grit via large surface area and short settling distances. The unit can be installed into the process flow, downstream of screening, in any system where limited head is available. The unit requires no external power source, has no internal moving parts, is self-cleaning, and has a compact modular construction. Wide turndown ratios can be accommodated in the HeadCell® when it is combined with Hydro's high performance washing system.

Specifications

Quantity:	1
Size:	9' diameter
Number of Tray/Unit:	6
Surface Area/Unit:	382 ft^2
Loading Rate @ Peak Flow/Unit:	10.9 gpm/ft^2
Performance @ Peak Flow:	95% removal of all grit (SG 2.65) ≥ 106 microns
Performance @ Permitted Flow:	95% removal of all grit (SG 2.65) ≥ 75 microns
Performance @ Average Flow:	95% removal of all grit (SG 2.65) ≥ 75 microns
Peak Flow/Unit:	6.0 mgd with 12" headloss
Permitted Flow/Unit:	2.0 mgd with 2" headloss
Average Flow/Unit:	1.2 mgd with 1" headloss
Discharge:	Weir
Underflow Connection:	4" flanged pipe
NPW Connection:	1" NPT
NPW Requirement/Unit:	Continuous 11 gpm @ 50 psig
Material of Construction:	304 SS Support Structure/Duct/Underflow Low Density Polyethylene Trays
Weight Dry (approximate):	2,200 lbs

TeaCup® Grit Classification Unit

The TeaCup® is an all hydraulic, high efficiency vortex separator designed to remove grit, sediment and sand from wastewater, raw water and other liquids using vortex motion and boundary layer effects to aid in organics removal. The TeaCup® provides finer particle removal as flow rate increases.

Specifications

Quantity:	1
Size:	32" diameter
Performance @ Design Flow:	95% removal of all grit (SG 2.65) ≥ 106 microns @ design flow
Design Flow/Unit:	300 gpm with 54" headloss
Maximum Flow/Unit:	450 gpm with 120" headloss
Influent Solids Concentration:	≤1.0%
Influent Connection:	4" flanged pipe
Effluent Connection:	6" flanged pipe
Underflow Connection:	4" flanged pipe
NPW Connection:	1" NPT
NPW Requirement/Unit	Continuous 10 gpm @ 50 psig

©2021 Hydro International

Material of Construction:	304 SS
Weight Dry/Wet (approximate):	1,000/1,300 lbs
Operation Time:	Continuous or a minimum of 10-15 minutes

Control Panel

The panel shall contain all timers, VFDs, switches, and indicator lights to operate one (1) Grit Classifier unit, and one (1) grit pump in either fully automated or manual mode.

Specifications

Quantity:	1
Enclosure Material:	304 SS
Enclosure Type:	NEMA 4X
Power Supply:	480V/3-phase
Control Logic:	Programmable Relay
Grit Pump Control:	VFD
Grit Classifier Control:	VFD

System Hydraulics

System hydraulics is the responsibility of the design engineer. Hydro International can provide information on HeadCell® hydraulics, TeaCup® flow vs. headloss curves and pumping and piping FAQ's to assist the engineer in determining system hydraulics and pump requirements, upon request.

Design Recommendations

- 1/2" or finer screening prior to the grit removal system
- Velocity through bar screen openings/slots/apertures should not exceed 4 ft/s at peak flow as recommended by industry design manuals.
- Estimated grit load at peak flow is 0.20 yd^3/hr.
- All piping connected to Hydro equipment must be supported by other means than the Hydro equipment
- 2 – 3 ft/s channel velocities at peak flow as recommended by industry design manuals
- 4 – 7 ft/s grit slurry pipe velocities as recommended by industry design manuals
- Incorporate a drain line, piped to a floor drain, in the grit dumpster to allow for further dewatering prior to disposal
- A minimum 18" of access clearance around all equipment and minimum 3' of access clearance above equipment
- Operators find that it is useful to locate a spray hose adjacent to the equipment so that they can spray all equipment down during an inspection
- Incorporate a minimal access platform to facilitate inspection access to the top of the equipment
- Intermittent operation of grit pump/ TeaCup® system may be an option. Contact Hydro for further information.

Start-up

One (1) factory trained representative, two (2) trips, for start-up and instruction services as required totaling four (4) days.

Quote Validity: 30 days After expiration of validity Hydro International reserves the right to adjust pricing to account for any significant increases in material costs.

Exclusions

Any item(s) not specifically described above are excluded and are not to be supplied by Hydro International including but not limited to the following:

- Field assembly, erection, and installation
- Anchor Bolts
- Interconnecting piping and valving not expressly stated above
  Pipe connections and fittings not expressly stated above
- All pipe supports, hangers and braces
- Controls, switches, control panels and instrumentation of any kind not expressly stated above
- Wiring and conduit

©2021 Hydro International

- Grit pump(s) and associated piping, valving, gauges
- Covers and access hatches
- Field or touch-up paint, painting, blasting and touch-up of surface finish
- Spare parts not specifically stated above
- Unloading, hauling and storage charge
- Lubricating oil and greases
- Grit study, field performance testing, laboratory testing and sample collection and analysis
- All concrete and grouting work
- Insulation and heat tracing of any kind
- Structural / Seismic analysis
- Performance, Warranty, Efficacy and/or Supply Bond(s)
- Grit dumpsters
- Translation Services
- Dewatering equipment

Options

Quotes will be provided upon request for the following optional features:

- Additional field days for startup or training
- Explosion proof upgrade
- PLC Based Control Panel
- Upgrade 304 to 316 Stainless Steel
- Structural / Seismic Anchorage Certification
- Field performance testing, laboratory testing and sample collection and analysis
- Service & maintenance contract
- Extended warranty

Warranty

Hydro International's Standard Warranty shall apply per the Terms and Conditions of Sale.

Delivery

Please allow 6 to 8 weeks after receipt of purchase order for approval drawings. Shipment is typically a maximum of 12-16 weeks after receipt of "Approved" or "Approved as Noted, Resubmittal Not Required" submittal package. Price includes truck freight to jobsite but does not include any state, or local taxes if required.

Terms & Conditions

This proposal is made pursuant to Hydro International's standard Terms & Conditions of Sale, attached hereto, and made a part hereof.

Contacts

Plant Representative:

Mr. Brendan Kelly

HRM Environmental

8000 Caribou Parke Cove

Austin, TX 78726

Ph: (512) 903 5444

bkelly@hrmenv.com

©2021 Hydro International

DO NOT CHANGE DUCT LAYOUT OR PIPE ORIENTATION
WITHOUT CONSULTING HYDRO INTERNATIONAL

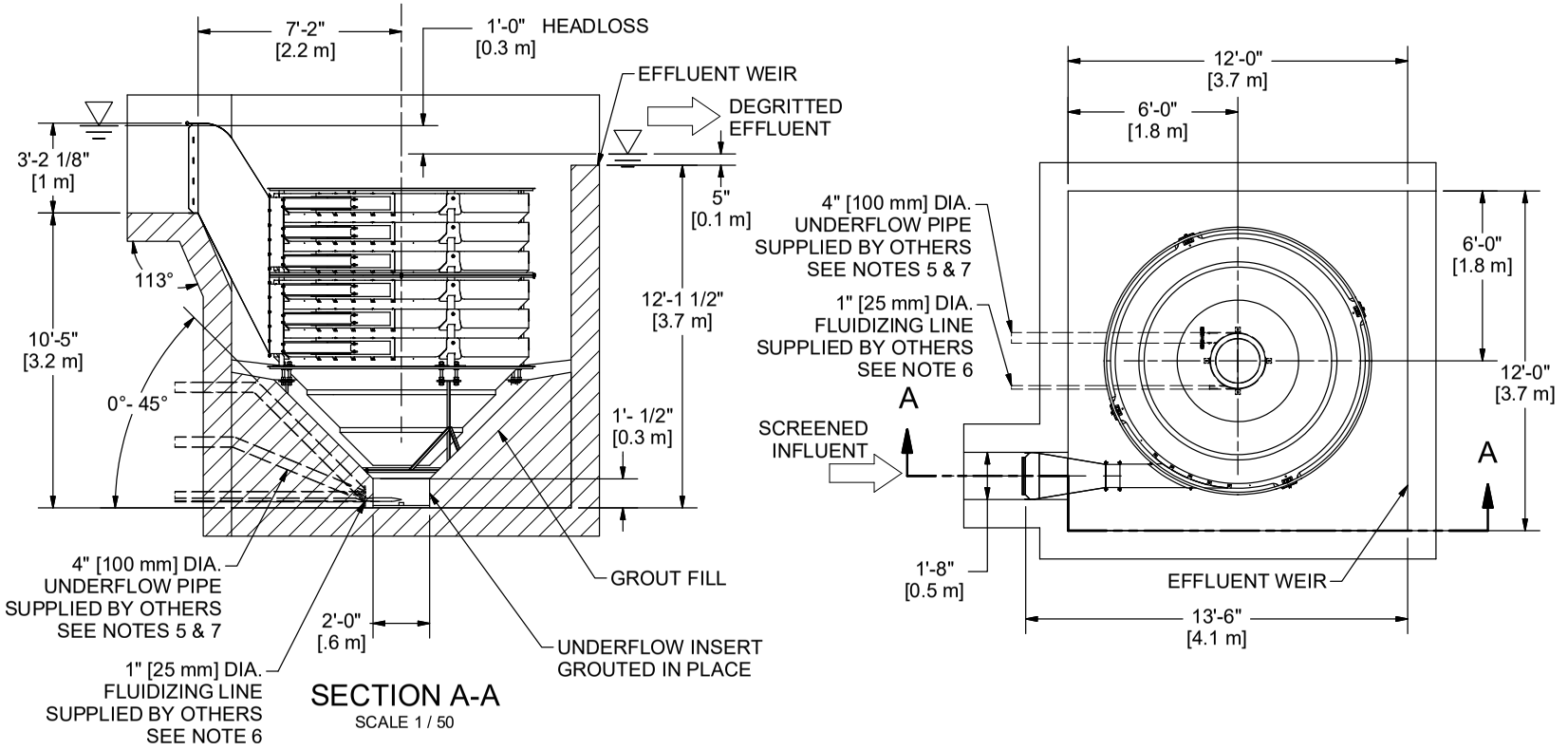

PROJECTION

COMMENTS:
1. ALLOW GRIT PUMP TO FULLY DRAIN HEADCELL TANK.

2. PLANT FLOW BYPASS RECOMMENDED TO ALLOW THE HEADCELL TO BE TAKEN OUT OF SERVICE FOR MAINTENANCE.

3. CLOCKWISE & COUNTERCLOCKWISE UNITS ARE AVAILABLE. CCW SHOWN

4. ALTERNATE EFFLUENT CONFIGURATIONS ARE AVAILABLE.

5. THE GRIT PUMP SUCTION LINE SHOULD BE DESIGNED FOR A 4-7 FT/S [1.2-2.2 M/S LINE VELOCITY.

6. FLUIDIZING WATER REQUIREMENTS
11 GPM [0.7 L/S] @ 50 psig

7. UNDERFLOW PIPE CONNCETION CAN BE SUPPLIED AT 0°, 22.5°, OR 45° ANGLE.

DATE:	SCALE:
1/17/2019	1 / 50

DRAWN BY:	CHECKED BY:	APPROVED BY
SIR	ACS	JG

Title
HEADCELL
9' DIAMETER
6 TRAYS
106 MICRON

Proposal

Hydro International

2925 NW Aloclek Drive
Suite 140
Hillsboro, OR 97124
Tel: +1 (503) 615-8130
Fax: +1 (503) 615-2906
hydro-int.com

ANY WARRANTY GIVEN BY HYDRO INTERNATIONAL WILL APPLY ONLY TO THOSE ITEMS SUPPLIED BY IT. ACCORDINGLY HYDRO INTERNATIONAL CANNOT ACCEPT ANY RESPONSIBILITY FOR ANY STRUCTURE, PLANT, OR EQUIPMENT, (OR THE PERFORMANCE THERE OF) DESIGNED, BUILT, MANUFACTURED, OR SUPPLIED BY ANY THIRD PARTY. HYDRO INTERNATIONAL HAVE A POLICY OF CONTINUOUS DEVELOPMENT AND RESERVE THE RIGHT TO AMEND THE SPECIFICATION. HYDRO INTERNATIONAL CANNOT ACCEPT LIABILITY FOR PERFORMANCE OF ITS EQUIPMENT, (OR ANY PART THEREOF), IF THE EQUIPMENT IS SUBJECT TO CONDITIONS OUTSIDE ANY DESIGN SPECIFICATION. HYDRO INTERNATIONAL OWNS THE COPYRIGHT OF THIS DRAWING, WHICH IS SUPPLIED IN CONFIDENCE. IT MUST NOT BE USED FOR ANY PURPOSE OTHER THAN THAT FOR WHICH IT IS SUPPLIED AND MUST NOT BE REPRODUCED, IN WHOLE OR IN PART, WITHOUT PRIOR PERMISSION IN WRITING FROM HYDRO INTERNATIONAL.
©2018 HYDRO INTERNATIONAL

DO NOT SCALE DRAWING

UNLESS OTHERWISE SPECIFIED, DIMENSIONS ARE IN INCHES.

TOLERENCES ARE:
FRACTIONS ± 1/16
DECIMALS:
X.X ± .06
X.XX ± .03
X.XXX ± .015
ANGLES: ± .5°

WEIGHT:	MATERIAL:
2128.3 lbmass	

NEXT ASSEMBLY:
9' 6T 1.08

DRAWING NO.:
9' 6T 1.08

SHEET SIZE:	SHEET:	Rev:
B	2 OF 2	-

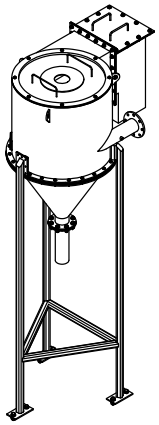

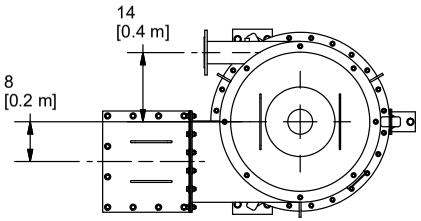

1. TEACUPS ARE AVAILABLE IN CLOCKWISE OR COUNTERCLOCKWISE ORIENTATION. CW SHOWN.

2. PLUMBING WILL BE LAID OUT AND INSTALLED ON EQUIPMENT DURING FABRICATION TO ENSURE PROPER FIT AND CORRECTNESS.

3. EQUIPMENT WEIGHT
DRY: 1,000 LBS; WET: 1,300 LBS

4. NPW REQUIREMENTS:
CONTINUOUS 50 GPM @ 50 PSIG

5. UNDERFLOW CONNECTION CAN BE THREADED OR FLANGED.

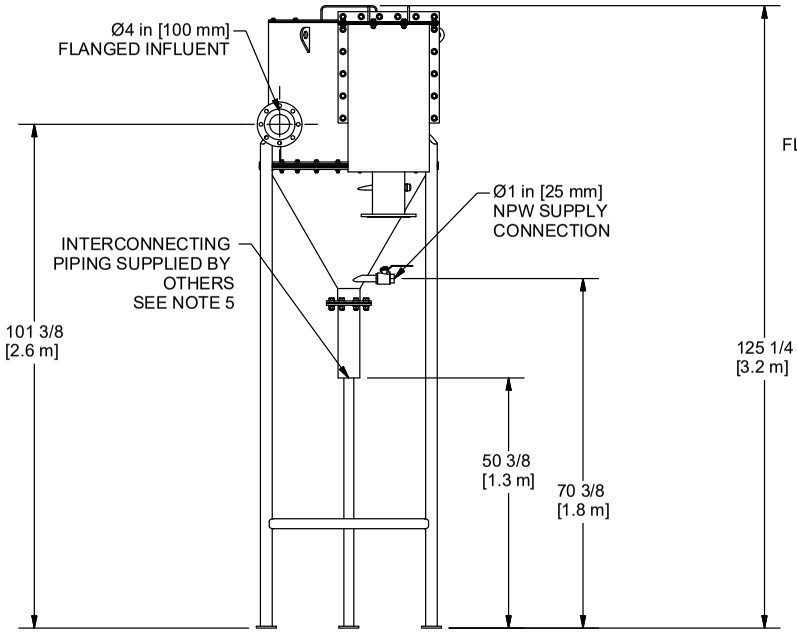

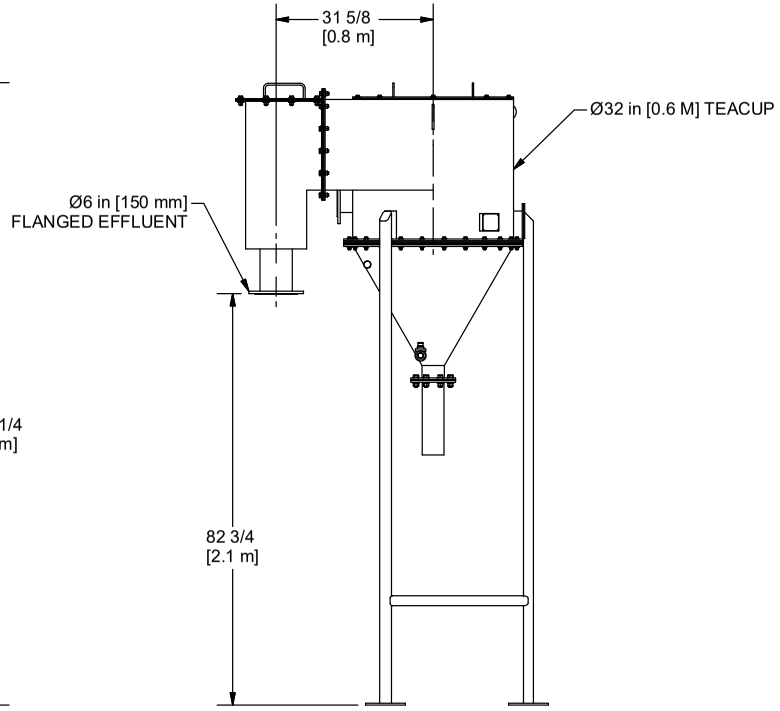

PROJECTION

IF IN DOUBT ASK

DATE:	SCALE:
9/15/2020	1:25

DRAWN BY:	CHECKED BY:	APPROVED BY
DR	AS	JG

Title
PROPOSAL DRAWING

32" TEACUP - CONTINUOUS UNDERFLOW

Hydro International
hydro-int.com

©2020 HYDRO INTERNATIONAL

ANY WARRANTY GIVEN BY HYDRO INTERNATIONAL WILL APPLY ONLY TO THOSE ITEMS SUPPLIED BY IT. ACCORDINGLY HYDRO INTERNATIONAL CANNOT ACCEPT ANY RESPONSIBILITY FOR ANY STRUCTURE, PLANT, OR EQUIPMENT, (OR THE PERFORMANCE THEREOF) DESIGNED, BUILT, MANUFACTURED, OR SUPPLIED BY ANY THIRD PARTY. HYDRO INTERNATIONAL HAVE A POLICY OF CONTINUOUS DEVELOPMENT AND RESERVE THE RIGHT TO AMEND THE SPECIFICATION. HYDRO INTERNATIONAL CANNOT ACCEPT LIABILITY FOR PERFORMANCE OF ITS EQUIPMENT, (OR ANY PART THEREOF), IF THE EQUIPMENT IS SUBJECT TO CONDITIONS OUTSIDE ANY DESIGN SPECIFICATION. HYDRO INTERNATIONAL OWNS THE COPYRIGHT OF THIS DRAWING, WHICH IS SUPPLIED IN CONFIDENCE. IT MUST NOT BE USED FOR ANY PURPOSE OTHER THAN THAT FOR WHICH IT IS SUPPLIED AND MUST NOT BE REPRODUCED, IN WHOLE OR IN PART, WITHOUT PRIOR PERMISSION IN WRITING FROM HYDRO INTERNATIONAL.

WEIGHT:	MATERIAL:
976 lbmass	

STOCK NUMBER:

DRAWING NO.:
TXTC32-106DB

SHEET SIZE:	SHEET:	Rev:
B	1 OF 1	-

Water & Wastewater Solutions

North American Grit Gradations

Hydro International is pleased to announce the availability of national and regional grit gradation data. This data, which has been compiled from over 120 tests across North America, contains average physical size data as well as settling velocity (SES) data, making it the most comprehensive information available on grit and its behavior.

Virtually all conventional grit removal processes rely on gravity sedimentation to achieve the separation of grit from wastewater. Most conventional grit removal processes are designed based on the assumption that grit is spherical and has a specific gravity 2.65. However, not all grit maintains a specific gravity of 2.65 and other factors such as shape and encapsulation by fats, oils and grease significantly impact its settling velocity. Therefore, the best means to analyze grit is to determine the settling velocity for given particle size ranges. Settling velocity data can be correlated to the measured settling velocity of a clean sand sphere. The settling velocity is expressed as the Sand Equivalent Size (SES), which is the sand particle size having the same settling velocity as the more buoyant grit particle. The correlated particle size, or Sand Equivalent Size can then be used for design of the grit removal process.

When settling velocity is considered in the design actual removal efficiency of grit particles can be estimated more realistically.

Data is available for the following regions:

Region	States / Provinces Included
Northeast	ME, VT, NH, MA, RI, NY, CT
Mid-Atlantic	PA, NJ, MD, DE, DC, VA, WV
Southeast	NC, SC, GA, AL, FL, MS
North Central	MO, KS, KY, IN, OH, IL, MI, WI, IA, MN, ND, SD, NE
South Central	TN, AR, OK, TX, LA
West	WA, OR, CA, AK, HI, AZ, NV, NM, CO, ID, MT, UT, WY
Western Canada	AB, MB, SK
Ontario Canada	ON

State data is available for individual states where more than 5 data points are available; those states currently include: Georgia, Texas, Florida, California, and Virginia.

Hydro International
2925 NE Aloclek Suite 140 · Hillsboro, OR 97124
Tel: (866) 615-8130 Fax: (503) 615-2906 Web: hydro-int.com

Hydro-Int.com

Texas Gradation

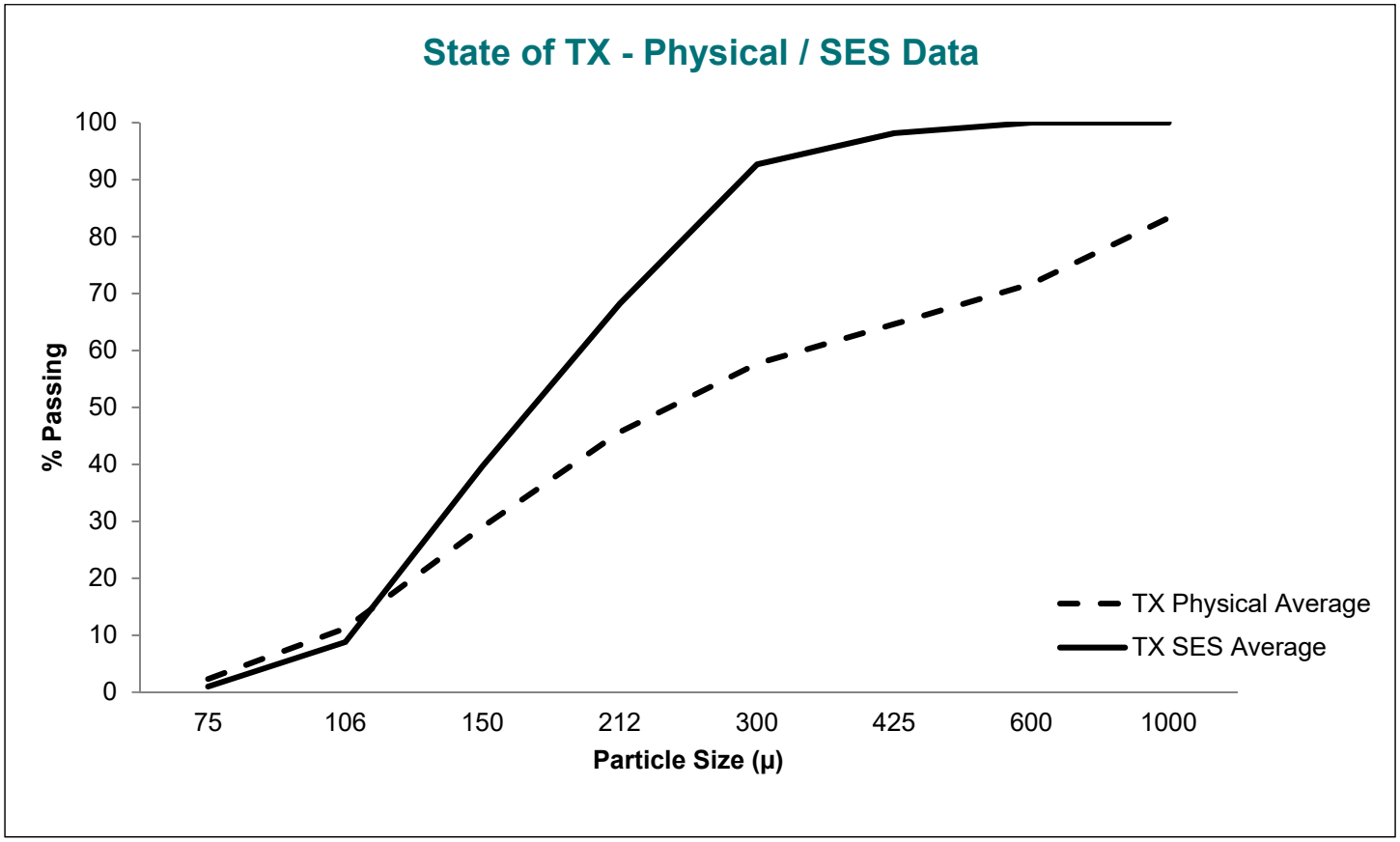

Micron	% Passing 75	106	150	212	300	425	600	1000	
TX Physical Average	2.3	11.2	29.0	45.7	57.7	64.6	71.7	83.3	*Physical*
TX SES Average	1.0	8.8	39.7	68.2	92.7	98.2	100.0	100.0	*SES*

The above table shows the % of grit passing through various sieve sizes based on physical size (unshaded) and Sand Equivalent Size (SES) (shaded). SES provides the settling velocity distribution of the grit particles.

©2017 Hydro International

Standard Terms and Conditions of Sale

1. **DEFINITIONS.** "Hydro" is Hydro International with an address of 2925 NE Aloclek Drive #140 in Hillsboro, Oregon. "Buyer" is the party purchasing the goods from Hydro.

2. **ENTIRE AGREEMENT**. Hydro's agreement is based on these terms and conditions of sale. This document, together with any additional writings signed by Hydro, represents a final, complete, and exclusive statement of the agreement between the parties and may not be modified, supplemented, explained, or waived by parol evidence, Buyer's purchase order, any course of dealing, Buyer's payment or acceptance, or in any other way except in writing signed by Hydro through its authorized representative. These terms and conditions are intended to cover all activity of Hydro and Buyer hereunder, including sales and use of products, parts, and work, and all related matters (references to products include parts and references to work include construction and installation). Hydro's obligations hereunder are expressly conditioned on Buyer's assent to these terms and conditions. Hydro objects to any terms that are different from, or additional to, these terms and conditions. Any applicable detail drawings and specifications are hereby incorporated and made a part of these Terms and Conditions of Sale insofar as they apply to the material supplied hereunder.

3. **SPECIFICATIONS.** Products are supplied in accordance with information received by Hydro, or its duly authorized agent, from Buyer. Hydro shall have no responsibility for products created or sold based upon inaccurate and/or incomplete information supplied to it. Buyer shall ensure that Hydro receives all relevant information in time to enable it to supply the appropriate products.

4. **INSTALLATION AND APPLICATION OF PRODUCTS.** Products supplied hereunder shall be installed and used only in the application for which they were specifically designed. Buyer should not presume that any products supplied by Hydro may be utilized for any applications other than those specified; nor shall Hydro's obligations, including, without limitation, any warranty obligations, survive Buyer's transfer of products supplied hereunder to third parties unless the products are transferred with Hydro's consent. In addition, Buyer shall not use any product supplied hereunder at any location other than at the location for which Hydro has previously received notice from Buyer. Any breach of any of the foregoing restrictions may amount to an infringement of the patent for the products in question and will in any event void all express or implied warranties relating to the products supplied hereunder.

5. **PURCHASE PRICE AND PAYMENT TERMS.** All prices are in U.S. dollars and all payments shall be made in U.S. dollars. Payment terms are as follows:

	Incremental Payment	Cumulative Payment
Upon Approval of Shop Drawings	10%	10%
Upon Delivery of Equipment to Site	80%	90%
Upon Final Acceptance or 45 days following completion of equipment start up	10%	100%

If payments are not made in conformance with the terms stated herein, any unpaid balance shall be subject to interest at a rate 1½% per month, but not to exceed the maximum amount permitted by law. If shipment is delayed by Buyer, the previously agreed date of readiness for shipment shall be deemed to be the date of shipment for payment purposes. If manufacture is delayed by Buyer, a payment shall be made based on purchase price and percentage of completion, with the balance payable in accordance with the terms as stated. If at any time in Hydro's judgment Buyer may be or may become unable or unwilling to meet the terms specified, Hydro may require satisfactory assurance or full or partial payment as a condition to commencing, or continuing manufacture, or in advance of shipment.

Until payment in full has been received by Hydro, this Standard Terms and Conditions of Sale shall constitute a security agreement and Buyer hereby grants Hydro a purchase money security interest in and to the products produced by Hydro hereunder, and any products or proceeds thereof. In particular:

a. Hydro will retain an express purchase money security interest in and to the products and all proceeds thereof.

b. Until full payment for the products is received by Hydro, Hydro reserves the right to retake possession of the products at any time and for this purpose Buyer authorizes Hydro or its duly authorized agent to enter upon land or premises where it believes the product may be.

c. Proceeds of any disposal of the products shall be held in trust for Hydro pursuant to the terms of the Maine Uniform Commercial Code.

d. Buyer grants Hydro a power of attorney for the purpose of filing a UCC-1 financing statement in the name of Buyer to evidence Hydro's security interest in the products.

©2021 Hydro International

6. **BACKCHARGES.** In the event that Buyer is required to make repairs, corrections or modifications to the goods supplied by Hydro, it shall only do so upon written approval from Hydro. Backcharges shall be limited to the costs directly associated in making the repairs, corrections or modifications to the goods supplied by Hydro. The costs of such backcharges shall be subject to approval by Hydro and shall be limited to: (1) directly related labor and material costs, (2) directly related equipment and tool rental at prevailing rates in the project location and (3) Buyer's overhead & supervision costs to make repairs, corrections or modifications to the goods supplied by Hydro. Buyer shall submit complete documentation to Hydro's satisfaction including but not limited to labor time sheets, material lists, and rental fees detailing the nature of the back charges. Backcharges shall be in the form of an adjustment to the contract price or reduction in retained payments and not a direct payment. No incidental or consequential backcharges shall be allowed.

7. **DELIVERY.** The goods are sold DDP (Incoterms 2010) jobsite, freight prepaid to Buyer at job site. Except as outlined in Paragraph 8 below, the risk of loss passes to Buyer after Hydro delivers the goods to the jobsite. Hydro reserves the right to select the method of shipment and carrier. Delivery dates are approximate only and are not a guarantee of delivery on a particular day. Hydro is not liable for failure or delays in deliveries of any cause whatsoever beyond the control of Hydro.

8. **TITLE & INSURANCE:** Title to the product(s) and risk of loss or damage shall pass to Buyer upon delivery to a carrier as outlined in Paragraph 7 above, or, in the event Buyer delays shipment, by the previously agreed date of readiness for shipment, except that a security interest in the product(s) or any replacement shall remain in Hydro's name, regardless of the mode of attachment to realty or other property, until the full price has been paid in cash. Buyer agrees to protect Hydro's interest by adequately insuring the product(s) against loss or damage from any external cause with Hydro named as insured or co-insured.

9. **ERECTION:** Unless otherwise stated in writing, the goods provided hereunder shall be assembled and erected by and at the expense of Buyer.

10. **CANCELLATION & BREACH:** Orders placed cannot be canceled, nor shipments of goods made up, or in process, be deferred beyond the original shipment dates specified, except with Hydro's written consent and upon terms which shall indemnify Hydro against all loss. In the event of cancellation or the substantial breach of Buyer's obligations, as by failing to make any of the payments when due, the parties agree that Hydro will suffer a serious and substantial damage that will be difficult, if not impossible, to measure, both as of the time of entering into this purchase agreement and as of the time of such cancellation or breach. Therefore, the parties agree that, upon such cancellation or breach, Buyer shall pay to Hydro the sums set forth herein below, which sums the parties do hereby agree shall constitute agreed and liquidated damages in such event:

    a. If cancellation or breach shall occur after the acceptance of the purchase order but prior to mailing of submittal documents by Hydro to Buyer, liquidated damages shall be 10% of the selling price.

    b. If cancellation or breach shall occur within thirty (30) days from the mailing of submittal documents by Hydro to Buyer, the liquidated damages shall be 20% of the selling price.

    c. If the cancellation or breach occurs after thirty (30) days from the mailing of submittal documents by Hydro to Buyer, but prior to notification that the order is ready for shipment, the liquidated damages shall be the total of 30% of the selling price plus the expenses incurred, cost of material, and reasonable value of the work expended to fill the order involved herein by Hydro's engineers and other employees, agents and representatives after the mailing of general arrangement drawings by Hydro to Buyer, said sums to be determined at the sole reasonable discretion of Hydro; provided, however, that the total liquidated damages under this provision shall not exceed the total selling price.

    d. If cancellation or breach shall occur after Hydro has notified Buyer that the order is ready for shipment, then the liquidated damages shall be the total selling price, less costs associated with startup or field testing.

11. **MATERIALS OF CONSTRUCTION, PAINTS AND COATINGS**: Buyer is responsible for determining the suitability of, and for giving final approval of, the materials of construction, paints, coatings, etc. to be used by Hydro.

12. **WARRANTY:** Any product that proves defective in material, workmanship or design within twelve (12) months after delivery (or entry into storage) will be, at the discretion of HYDRO, modified, repaired or replaced, or Buyer's payment for the products will be refunded. This shall be Buyer's sole remedy. HYDRO EXPRESSLY EXCLUDES AND DISCLAIMS ANY WARRANTY OF MERCHANTABILITY, FITNESS FOR A PARTICULAR PURPOSE OR OTHER WARRANTIES, EXPRESS OR IMPLIED.

    This warranty does not cover any defects or costs caused by: (1) normal wear and tear of equipment from designed operation. (2) modification, alteration, repair or service of the goods by anyone other than Hydro; (3) physical abuse to, or misuse of, the goods, or operation thereof in a manner contrary to Hydro's instructions; (4) any use of the goods other than that for which they were intended; (5) chemicals or components which were not disclosed to Hydro; (6) storage contrary to Hydro's instructions; or (7) failure to maintain the goods in accordance with Hydro's instructions.

    This warranty does not apply to component parts of the goods that were not both originally designed and manufactured by Hydro, including, but not limited to, valves and controls. These component parts do not carry any warranties by Hydro, and only carry the warranties, if any, of their manufacturers.

©2021 Hydro International

In order for Buyer to make a claim under this warranty, Buyer must promptly, and within the warranty period, notify Hydro in writing of any defect(s) in the goods covered by this warranty. If any defect(s) in the goods covered by this warranty are visible at the time of delivery, Buyer must notify Hydro of the defect(s) in writing within five working days. To make any claim under this warranty, Buyer must also fully comply with written authorization and return instructions from Hydro.

13. **FIELD SERVICE:** Startup/Field Service will only be scheduled upon written request. Buyer shall notify Hydro of schedule requirements at least ten (10) working days in advance, or additional charges may be added to cover late-scheduled travel costs. Additional costs will be limited to those arising out of late-scheduled costs. Should Buyer have outstanding balances due Hydro, no startup / field service will be scheduled until such payments are received by Hydro. Hydro will send documents to Buyer defining the service or startup requirements. Buyer assumes all responsibility for the readiness of the system when it requests startup service. Should Hydro's Field Service Engineer arrive at the jobsite and determine that the system cannot be started up within a reasonable time, Hydro shall have the option to bring the Field Service Engineer home and bill Buyer for time, travel and living expenses. Additional field service is available from Hydro at the prevailing per-diem rate at the time of the request for service plus all travel and living expenses, portal-to-portal. A purchase order or change order will be required prior to scheduling this additional service.

14. **LIMITATION OF HYDRO'S LIABILITY**. Hydro assumes no liability or responsibility for the misuse of its products by Buyer, Buyer's employees, agents or assigns, or other use inconsistent with the use appropriate to the performance specification requirements submitted to Hydro, and Buyer agrees to indemnify and hold harmless Hydro for any loss, costs, expense or liability that it may incur or be put to as a result of misuse or inconsistent use of the products. In addition, Hydro shall have no liability to Buyer for any consequential or incidental damages incurred by Buyer in connection with the contract documents or the products purchased by Buyer. Hydro shall not be liable for any loss which results from delay in delivery caused by any reason beyond its control, including, but not limited to, acts of God, casualty, civil disturbance, labor disputes, strikes, transportation or inability to obtain materials or services, any interruption of its facilities, or act of any governmental authority. The time for delivery shall be extended during the continuance of such conditions. The total liability of Hydro to Buyer in the form of liquidated damages for any loss, indemnity, damage or delay of any kind will not under any circumstances exceed 25% of the Contract Sum.

15. **INTELLECTUAL PROPERTY**. Hydro shall retain sole ownership of all of its intellectual property used or produced in connection with the Project, including but not limited to all drawings, specifications, software, written materials, manuals, marks, business methods, and all other property that is capable of protection by a patent, copyright or trademark (whether or not such protection has actually been sought). Buyer shall not use such intellectual property except for the purpose of confirming the quality of design and/or manufacturing of the products and services set forth in the Proposal. Buyer shall not photocopy, duplicate or in any way copy such intellectual property except for the Buyer's internal purposes only (but not for rendering services or selling products to third persons). Buyer shall not sell, license, assign or transfer the intellectual property protected by this paragraph to anyone. Buyer shall ensure that Owner is in possession of valid licenses for all third-party software (not provided by Hydro) used for the Project, and shall indemnify and hold harmless Hydro against all claims by licensors of such software. Hydro makes no warranty regarding the effect of such third-party software on the performance of the software to be developed by Hydro for the Project and Hydro shall be released from any warranties given to Buyer to the extent that such software causes or contributes to problems. Following acceptance and final payment to Hydro, Hydro will grant to the Owner a non-transferable, non-exclusive license to use the software for the Owner's internal purposes only in the form of the license agreement attached as Exhibit A. Patent: www.hydro-int.com/patents

16. **TAXES.** Prices stated herein do not include any tax, excise, duty or levy now or hereafter enacted or imposed, by any governmental authority on the manufacture, sale, delivery and/or use of any item delivered. An additional charge will be made therefore and paid by Buyer unless Hydro is furnished with a proper exemption certificate relieving Hydro of paying or collecting the tax, excise, duty or levy in question.

17. **INTERPRETATION OF CONTRACT.** This contract shall be construed according to the laws of the State of Maine.

18. **CHOICE OF FORUM**. Buyer and Hydro hereby consent and agree that the United States District Court for the District of Maine or the District Court or Superior Court located in the City of Portland, County of Cumberland, Maine will have exclusive jurisdiction over any legal action or proceeding arising out of or relating to the contract documents, and each party consents to the personal jurisdiction of such Courts for the purpose of any such action or proceeding. Buyer and Hydro further hereby consent and agree that the exclusive venue for any legal action or proceeding arising out of or relating to the contract documents will be in the County of Cumberland, Maine. Each party hereby waives all rights it has or which may hereafter arise to contest such exclusive jurisdiction and venue.

19. **ATTORNEYS' FEES.** If any judicial or non-judicial proceeding is initiated for the purpose of enforcing a provision of this contract, the prevailing party shall be awarded reasonable attorneys' fees in addition to all other costs associated with the proceeding, whether or not the proceeding advances to judgment.

20. **SEVERABILITY.** If any provisions of this contract are held invalid by a court of competent jurisdiction, the remainder of this contract shall not be rendered invalid, and such invalid provisions shall be modified, in keeping with the letter and spirit of this contract, to the extent permitted by applicable law so as to be rendered valid.

©2021 Hydro International

21. **ANTI-BRIBERY.** Hydro International will not engage in any form of bribery or corruption. The offering, giving or receiving of bribes is contrary to Hydro International's values and can play no part in the way in which it carries out its business. Hydro requires you to support our approach and implement provisions consistent with our policy through your own organization and your supply chain. Please find a copy of our Anti-Bribery and Corruption Policy on our website at: https://www.hydro-int.com/sites/default/files/hydro_international_anti-bribery_and_corruption_policy_-_july_2018.pdf

©2021 Hydro International

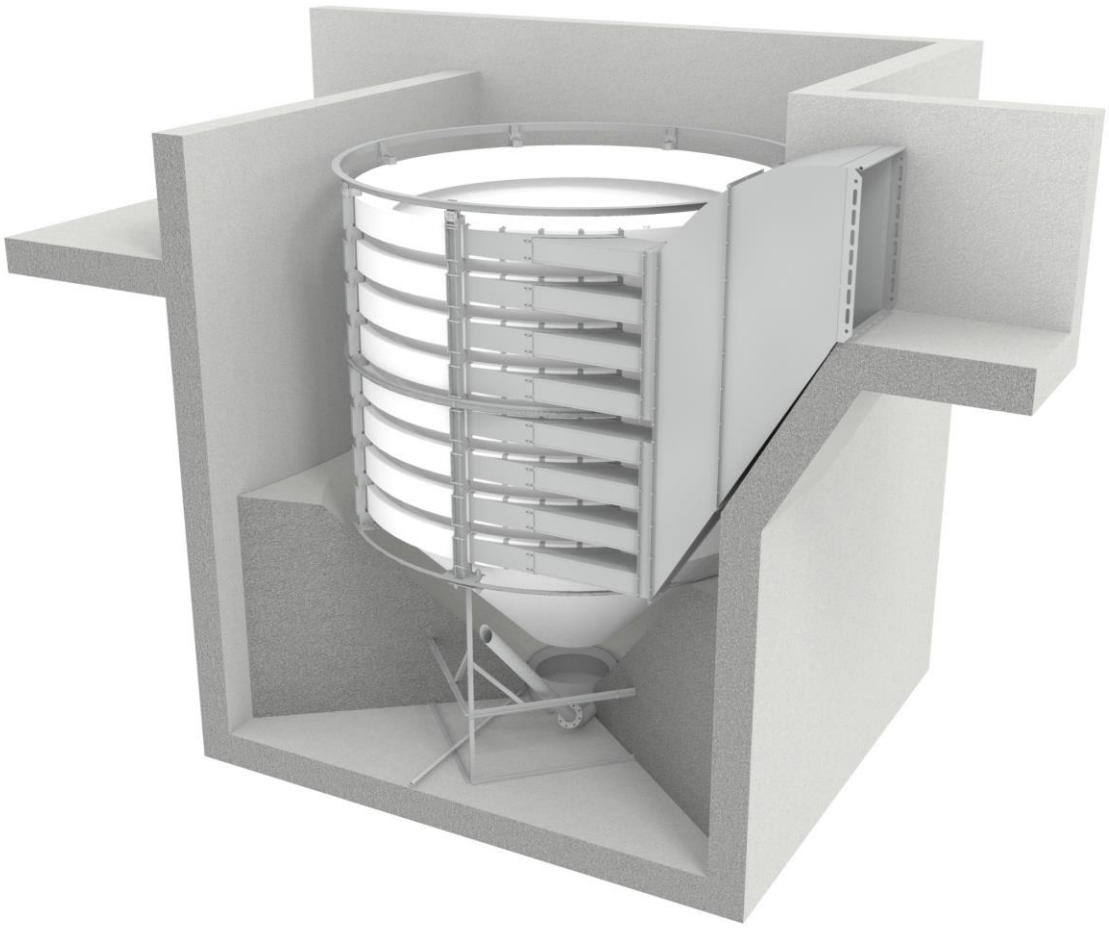

Grit Removal System Proposal Package
Houston, TX West U WWTP
Kimley-Horn

Manufacturer

Hydro International
2925 NE Aloclek Suite 140
Hillsboro, OR 97124
(866) 615-8130 ph
(503) 615-2906 fax
hydro-int.com

Representative

HRM Environmental
8000 Caribou Parke Cove
Austin, TX 78726
(512) 903 5444 ph

Water & Wastewater Solutions

June 4, 2021

Mr. Michael Moriarty, P.E.
Kimley-Horn
11700 Katy Fwy Ste 800
Houston, TX 77079

RE: Headworks Grit Removal System
Houston, TX West U WWTP
File #21_11_0290-B

Dear Mr. Moriarty:

Thank you for your interest in Hydro International. We are pleased to present our proposal for a HeadCell® Grit Removal, Washing, and Dewatering System. Hydro International is dedicated to providing innovative, high performance advanced grit management systems grit removal equipment. Supported by over 30 years of research, testing both in our lab and in the field, product development and superior engineering we pride ourselves on providing high-quality products and unmatched customer service. Our extensive experience includes thousands of installations throughout the world.

Grit is continually introduced into collection systems but is not uniformly carried to treatment facilities. As flows increase, the grit load entering the plant elevates. Once in the treatment plant, where velocities are slower, grit will deposit in processes, disrupting systems, decreasing equipment longevity, and increasing maintenance costs. The HeadCell® Grit Removal System offers many benefits over conventional grit removal systems including:

- Complete system designed to process the solids load as well as the hydraulic load through each step of the process, collection, washing/classification, and dewatering and producing a clean, dry product.
- Removing fine and slowly settling grit, protecting equipment and processes from abrasive wear and sedimentation
- All-hydraulic design with no moving parts, minimizing operating and maintenance costs
- Small footprint yet capable of high efficiency solids capture and removal
- Robust design allowing long component life with minimal wear

We sincerely appreciate your interest in our equipment and look forward to working with you on this project. As you progress with the design, we can quickly generate CAD drawings, budget updates, and specifications as well as provide review of equipment layouts and specifications for your particular application. Reference lists are available through your local representative. If you have any questions or concerns, do not hesitate to contact us.

Regards,
Hydro International



Sam Randall
Applications Engineer

Hydro International
2925 NE Aloclek Suite 140 · Hillsboro, OR 97124
Tel: (866) 615-8130 Fax: (503) 615-2906 Web: hydro-int.com

Performance Objective

Hydro International is pleased to propose the following HeadCell® grit removal, washing, and dewatering system to be installed in an existing plant which has flows of 1.2 mgd average and 6 mgd peak. Each component of the grit removal systems performance shall be outlined below.

Proposed Equipment Summary

HeadCell® Grit Concentrator Unit

The HeadCell® is an all-hydraulic grit concentrator, which uses vortex flow and a stacked tray design to efficiently capture and settle fine grit via large surface area and short settling distances. The unit can be installed into the process flow, downstream of screening, in any system where limited head is available. The unit requires no external power source, has no internal moving parts, is self-cleaning, and has a compact modular construction. Wide turndown ratios can be accommodated in the HeadCell® when it is combined with Hydro's high performance washing system.

Specifications

Quantity:	1
Size:	9' diameter
Number of Tray/Unit:	6
Surface Area/Unit:	382 ft^2
Loading Rate @ Peak Flow/Unit:	10.9 gpm/ft^2
Performance @ Peak Flow:	95% removal of all grit (SG 2.65) ≥ 106 microns
Performance @ Permitted Flow:	95% removal of all grit (SG 2.65) ≥ 75 microns
Performance @ Average Flow:	95% removal of all grit (SG 2.65) ≥ 75 microns
Peak Flow/Unit:	6.0 mgd with 12" headloss
Permitted Flow/Unit:	2.0 mgd with 2" headloss
Average Flow/Unit:	1.2 mgd with 1" headloss
Discharge:	Weir
Underflow Connection:	4" flanged pipe
NPW Connection:	1" NPT
NPW Requirement/Unit:	Continuous 11 gpm @ 50 psig
Material of Construction:	304 SS Support Structure/Duct/Underflow Low Density Polyethylene Trays
Weight Dry (approximate):	2,200 lbs

Hydro GritCleanse™ Grit Washing / Dewatering Unit

The Hydro GritCleanse™ is a fully automated, high efficiency unit that effectively removes, washes, and dewaters fine grit, sugar sand, and high-density fixed solids from grit slurries. The large conical clarifier with tangential inlet and internal baffle enhances the settling of fine particles and the fluidized sand bed scrubs off and separates attached organics, resulting in a dry grit with extremely low organic content suitable for landfill disposal.

Specifications

Quantity:	1
Size:	8412
Design Flow/Unit:	300 gpm with 3" headloss
Influent Solids Concentration:	≤1.5%
Influent Connection:	4" flanged pipe
Capacity:	up to 1.5 cy/hr
Screw Diameter:	12"
Clarifier Size:	84"
Min. Free Water Surface Area:	38.5 ft^2
Auger Motor:	2 hp, TENV, 480V/3 phase/ 60 Hz
Agitator Motor:	1 hp, TENV, 480V/3 phase/ 60 Hz
Effluent Connection:	8" flanged pipe

©2021 Hydro International

Organics Discharge Connection:	4” flanged pipe
Drain Connection:	3” NPT pipe
NPW Connection:	1” NPT (2 No.)
NPW Requirement Fluidized Bed:	25 gpm @ 50 psig Continuous
NPW Requirement Organics Flush:	25 gpm @ 50 psig (20-30 sec. hourly)
Operation:	Continuous or a minimum of 10-15 minutes
Body Material:	304 SS
Weight Dry/Wet (approximate):	3,600/10,400 lbs.
Performance:	95% removal of all grit (specific gravity 2.65) ≥ 75 microns with less than 5% volatile solids and greater than 90% total solids w/ standard intermittent screw operation

Control Panel

The panel shall contain all timers, VFDs, switches, and indicator lights to operate one (1) Hydro GritCleanse™ unit, and one (1) grit pump in either fully automated or manual mode.

Specifications

Quantity:	1
Enclosure Material:	304 SS
Enclosure Type:	NEMA 4X
Power Supply:	480V/3-phase
Control Logic:	AB MicroLogix 1400 PLC, PanelView 600 Plus OIU
Grit Pump Control:	VFD
Hydro GritCleanse™ Motor Control:	VFDs (2 No.)

System Hydraulics

System hydraulics is the responsibility of the design engineer. Hydro International can provide information on HeadCell® hydraulics, and pumping and piping FAQ’s to assist the engineer in determining system hydraulics and pump requirements, upon request.

Design Recommendations

- 1/2” or finer screening prior to the grit removal system
- Velocity through bar screen openings/slots/apertures should not exceed 4 ft/s at peak flow as recommended by industry design manuals.
- Estimated grit load at peak flow is 0.20 yd^3/hr.
- Stated output grit quality (total solids/volatile solids) is based on a minimum plant influent grit quantity of 50 pounds FS/million gallon.
- All piping connected to Hydro equipment must be supported by other means than the Hydro equipment
- 2 – 3 ft/s channel velocities at peak flow as recommended by industry design manuals
- 4 – 7 ft/s grit slurry pipe velocities as recommended by industry design manuals
- Incorporate a drain line, piped to a floor drain, in the grit dumpster to allow for further dewatering prior to disposal
- A minimum 18” of access clearance around all equipment and minimum 3’ of access clearance above equipment
- Operators find that it is useful to locate a spray hose adjacent to the equipment so that they can spray all equipment down during an inspection
- Incorporate a minimal access platform to facilitate inspection access to the top of the equipment
- Discharge chutes for grit should be at a minimum 45° incline if it is open chute. If it is an enclosed chute/pipe/tube then a minimum angle of 60° is required to ensure plugging does not occur.

Start-up

One (1) factory trained representative, two (2) trips, for start-up and instruction services as required totaling four (4) days.

Quote Validity: 30 days After expiration of validity Hydro International reserves the right to adjust pricing to account for any significant increases in material costs.

©2021 Hydro International

Exclusions

Any item(s) not specifically described above are excluded and are not to be supplied by Hydro International including but not limited to the following:

- Field assembly, erection, and installation
- Anchor Bolts
- Interconnecting piping and valving not expressly stated above
  Pipe connections and fittings not expressly stated above
- All pipe supports, hangers and braces
- Controls, switches, control panels and instrumentation of any kind not expressly stated above
- Wiring and conduit
- Grit pump(s) and associated piping, valving, gauges
- Covers and access hatches
- Field or touch-up paint, painting, blasting and touch-up of surface finish
- Spare parts not specifically stated above
- Unloading, hauling and storage charge
- Lubricating oil and greases
- Grit study, field performance testing, laboratory testing and sample collection and analysis
- All concrete and grouting work
- Insulation and heat tracing of any kind
- Structural / Seismic analysis
- Performance, Warranty, Efficacy and/or Supply Bond(s)
- Grit dumpsters
- Translation Services

Options

Quotes will be provided upon request for the following optional features:

- Additional field days for startup or training
- Explosion proof upgrade
- Upgrade 304 to 316 Stainless Steel
- Structural / Seismic Anchorage Certification
- Field performance testing, laboratory testing and sample collection and analysis
- Service & maintenance contract
- Extended warranty

Warranty

Hydro International’s Standard Warranty shall apply per the Terms and Conditions of Sale.

Delivery

Please allow 6 to 8 weeks after receipt of purchase order for approval drawings. Shipment is typically a maximum of 12-16 weeks after receipt of "Approved" or "Approved as Noted, Resubmittal Not Required" submittal package. Price includes truck freight to jobsite but does not include any state, or local taxes if required.

Terms & Conditions

This proposal is made pursuant to Hydro International’s standard Terms & Conditions of Sale, attached hereto, and made a part hereof.

©2021 Hydro International

Contacts

Plant Representative:

Mr. Brendan Kelly

HRM Environmental

8000 Caribou Parke Covez

Austin, TX 78726

Ph: (512) 903 5444

bkelly@hrmenv.com

DO NOT CHANGE DUCT LAYOUT OR PIPE ORIENTATION
WITHOUT CONSULTING HYDRO INTERNATIONAL

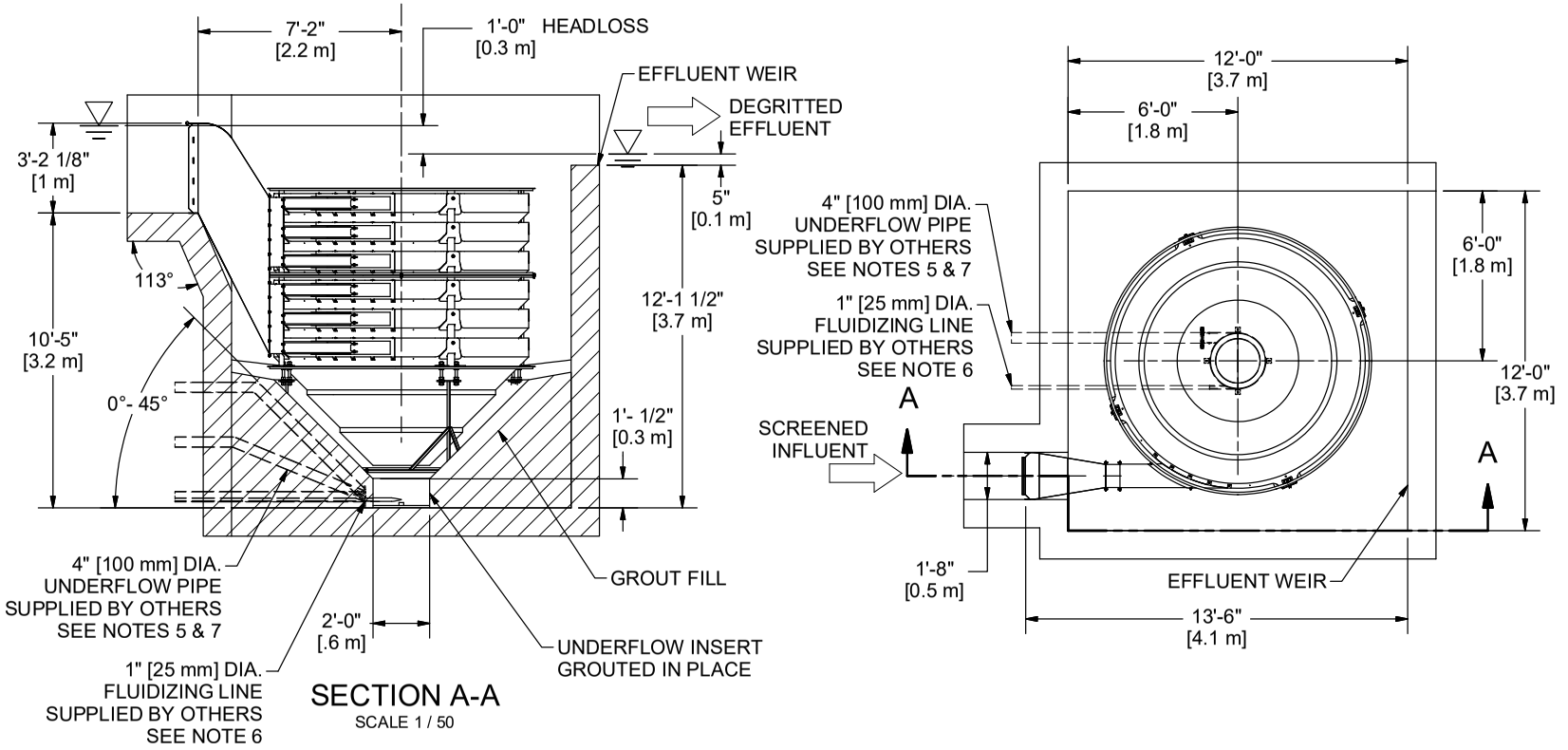

PROJECTION

COMMENTS:
1. ALLOW GRIT PUMP TO FULLY DRAIN HEADCELL TANK.

2. PLANT FLOW BYPASS RECOMMENDED TO ALLOW THE HEADCELL TO BE TAKEN OUT OF SERVICE FOR MAINTENANCE.

3. CLOCKWISE & COUNTERCLOCKWISE UNITS ARE AVAILABLE. CCW SHOWN

4. ALTERNATE EFFLUENT CONFIGURATIONS ARE AVAILABLE.

5. THE GRIT PUMP SUCTION LINE SHOULD BE DESIGNED FOR A 4-7 FT/S [1.2-2.2 M/S LINE VELOCITY.

6. FLUIDIZING WATER REQUIREMENTS
11 GPM [0.7 L/S] @ 50 psig

7. UNDERFLOW PIPE CONNCETION CAN BE SUPPLIED AT 0°, 22.5°, OR 45° ANGLE.

DATE:	SCALE:
1/17/2019	1 / 50

DRAWN BY:	CHECKED BY:	APPROVED BY
SIR	ACS	JG

Title
HEADCELL
9' DIAMETER
6 TRAYS
106 MICRON

Proposal

Hydro International

2925 NW Aloclek Drive
Suite 140
Hillsboro, OR 97124
Tel: +1 (503) 615-8130
Fax: +1 (503) 615-2906
hydro-int.com

ANY WARRANTY GIVEN BY HYDRO INTERNATIONAL WILL APPLY ONLY TO THOSE ITEMS SUPPLIED BY IT. ACCORDINGLY HYDRO INTERNATIONAL CANNOT ACCEPT ANY RESPONSIBILITY FOR ANY STRUCTURE, PLANT, OR EQUIPMENT, (OR THE PERFORMANCE THERE OF) DESIGNED, BUILT, MANUFACTURED, OR SUPPLIED BY ANY THIRD PARTY. HYDRO INTERNATIONAL HAVE A POLICY OF CONTINUOUS DEVELOPMENT AND RESERVE THE RIGHT TO AMEND THE SPECIFICATION. HYDRO INTERNATIONAL CANNOT ACCEPT LIABILITY FOR PERFORMANCE OF ITS EQUIPMENT, (OR ANY PART THEREOF), IF THE EQUIPMENT IS SUBJECT TO CONDITIONS OUTSIDE ANY DESIGN SPECIFICATION. HYDRO INTERNATIONAL OWNS THE COPYRIGHT OF THIS DRAWING, WHICH IS SUPPLIED IN CONFIDENCE. IT MUST NOT BE USED FOR ANY PURPOSE OTHER THAN THAT FOR WHICH IT IS SUPPLIED AND MUST NOT BE REPRODUCED, IN WHOLE OR IN PART, WITHOUT PRIOR PERMISSION IN WRITING FROM HYDRO INTERNATIONAL.
©2018 HYDRO INTERNATIONAL

DO NOT SCALE DRAWING

UNLESS OTHERWISE SPECIFIED, DIMENSIONS ARE IN INCHES.

TOLERENCES ARE:
FRACTIONS ± 1/16
DECIMALS:
X.X ± .06
X.XX ± .03
X.XXX ± .015
ANGLES: ± .5°

WEIGHT:	MATERIAL:
2128.3 lbmass	

NEXT ASSEMBLY:
9' 6T 1.08

DRAWING NO.:
9' 6T 1.08

SHEET SIZE:	SHEET:	Rev:
B	2 OF 2	-

Hydro International Grit System

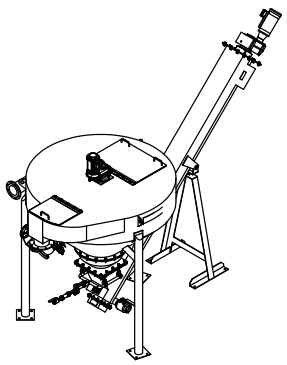

ISOMETRIC VIEW
NTS

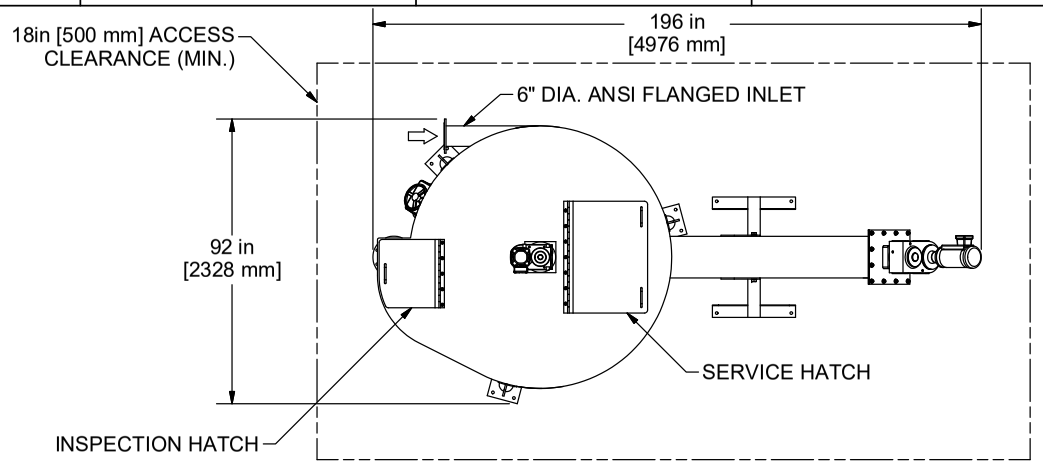

PLAN VIEW

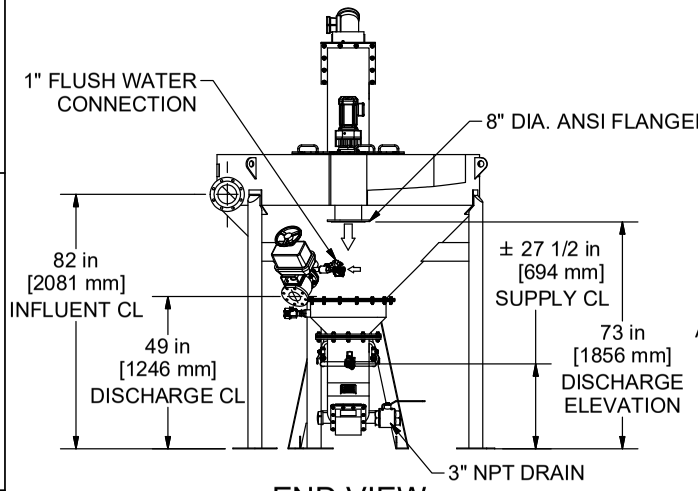

END VIEW

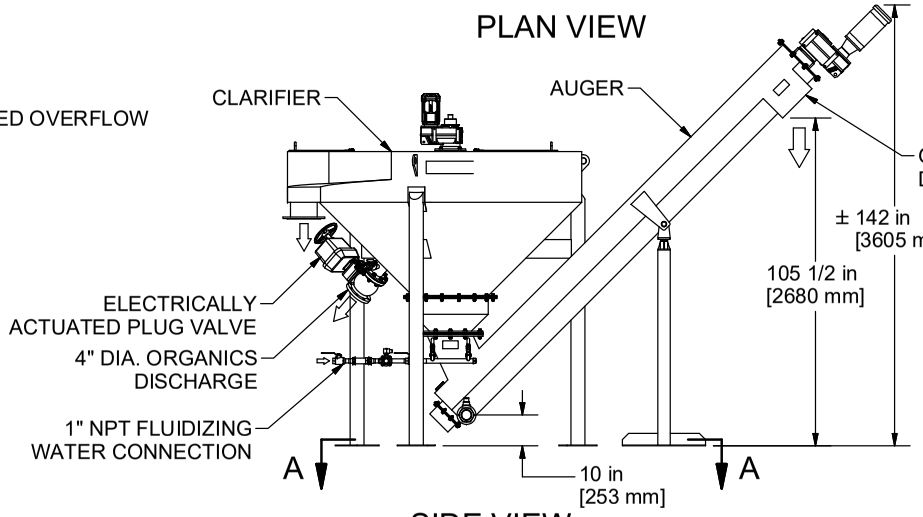

SIDE VIEW

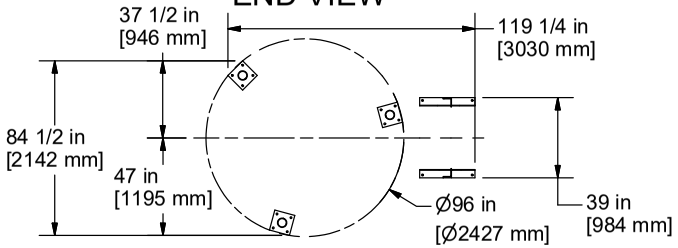

FOOTPRINT A-A
NTS

PROJECTION

COMMENTS:

1. PROVIDE ADEQUATE CLEARANCE FOR SERVICE AND MAINTENANCE ACCESS

2. NPW REQUIREMENTS:
25 GPM @ 50 PSI CONTINUOUS
50 GPM @ 50 PSI INTERMITTENT

3. EQUIPMENT WEIGHTS:
DRY: 3,600 LBS [1,630 KG]
WET: 10,400 LBS [4,700 KG] (MAX)

REVISION HISTORY

REV	BY	DESCRIPTION	DATE
A	SR	3-INCH DRAIN	17-Jul-19
-		FIRST RELEASE	

DATE: 19-Jun-18
SCALE: 1 / 40
DRAWN BY: SR
CHECKED BY: SR
APPROVED BY:
Title: HYDRO GRITCLEANSE 8412

COMPLETE UNIT

PROPOSAL DRAWING

Hydro International

2925 NW Aloclek Drive
Suite 140
Hillsboro, OR 97124
Tel: +1 (503) 615-8130
Fax: +1 (503) 615-2906
hydro-int.com

ANY WARRANTY GIVEN BY HYDRO INTERNATIONAL WILL APPLY ONLY TO THOSE ITEMS SUPPLIED BY IT. ACCORDINGLY HYDRO INTERNATIONAL CANNOT ACCEPT ANY RESPONSIBILITY FOR ANY STRUCTURE, PLANT, OR EQUIPMENT, (OR THE PERFORMANCE THERE OF) DESIGNED, BUILT, MANUFACTURED, OR SUPPLIED BY ANY THIRD PARTY. HYDRO INTERNATIONAL HAVE A POLICY OF CONTINUOUS DEVELOPMENT AND RESERVE THE RIGHT TO AMEND THE SPECIFICATION. HYDRO INTERNATIONAL CANNOT ACCEPT LIABILITY FOR PERFORMANCE OF ITS EQUIPMENT, (OR ANY PART THEREOF), IF THE EQUIPMENT IS SUBJECT TO CONDITIONS OUTSIDE ANY DESIGN SPECIFICATION. HYDRO INTERNATIONAL OWNS THE COPYRIGHT OF THIS DRAWING, WHICH IS SUPPLIED IN CONFIDENCE. IT MUST NOT BE USED FOR ANY PURPOSE OTHER THAN THAT FOR WHICH IT IS SUPPLIED AND MUST NOT BE REPRODUCED, IN WHOLE OR IN PART, WITHOUT PRIOR PERMISSION IN WRITING FROM HYDRO INTERNATIONAL.
©2019 HYDRO INTERNATIONAL

DO NOT SCALE DRAWING

UNLESS OTHERWISE SPECIFIED, DIMENSIONS ARE IN INCHES.

TOLERENCES ARE:
FRACTIONS ± 1/16
DECIMALS:
X.X ± .06
X.XX ± .03
X.XXX ± .015
ANGLES: ± .5°

WEIGHT: 3513.1 lbmass
MATERIAL:
NEXT ASSEMBLY: N/A
DRAWING NO.: PROPOSAL
SHEET SIZE: B
SHEET: 1 OF 1
Rev: A

Water & Wastewater Solutions

North American Grit Gradations

Hydro International is pleased to announce the availability of national and regional grit gradation data. This data, which has been compiled from over 120 tests across North America, contains average physical size data as well as settling velocity (SES) data, making it the most comprehensive information available on grit and its behavior.

Virtually all conventional grit removal processes rely on gravity sedimentation to achieve the separation of grit from wastewater. Most conventional grit removal processes are designed based on the assumption that grit is spherical and has a specific gravity 2.65. However, not all grit maintains a specific gravity of 2.65 and other factors such as shape and encapsulation by fats, oils and grease significantly impact its settling velocity. Therefore, the best means to analyze grit is to determine the settling velocity for given particle size ranges. Settling velocity data can be correlated to the measured settling velocity of a clean sand sphere. The settling velocity is expressed as the Sand Equivalent Size (SES), which is the sand particle size having the same settling velocity as the more buoyant grit particle. The correlated particle size, or Sand Equivalent Size can then be used for design of the grit removal process.

When settling velocity is considered in the design actual removal efficiency of grit particles can be estimated more realistically.

Data is available for the following regions:

Region	States / Provinces Included
Northeast	ME, VT, NH, MA, RI, NY, CT
Mid-Atlantic	PA, NJ, MD, DE, DC, VA, WV
Southeast	NC, SC, GA, AL, FL, MS
North Central	MO, KS, KY, IN, OH, IL, MI, WI, IA, MN, ND, SD, NE
South Central	TN, AR, OK, TX, LA
West	WA, OR, CA, AK, HI, AZ, NV, NM, CO, ID, MT, UT, WY
Western Canada	AB, MB, SK
Ontario Canada	ON

State data is available for individual states where more than 5 data points are available; those states currently include: Georgia, Texas, Florida, California, and Virginia.

Hydro International
2925 NE Aloclek Suite 140 · Hillsboro, OR 97124
Tel: (866) 615-8130 Fax: (503) 615-2906 Web: hydro-int.com

Hydro-Int.com

Texas Gradation

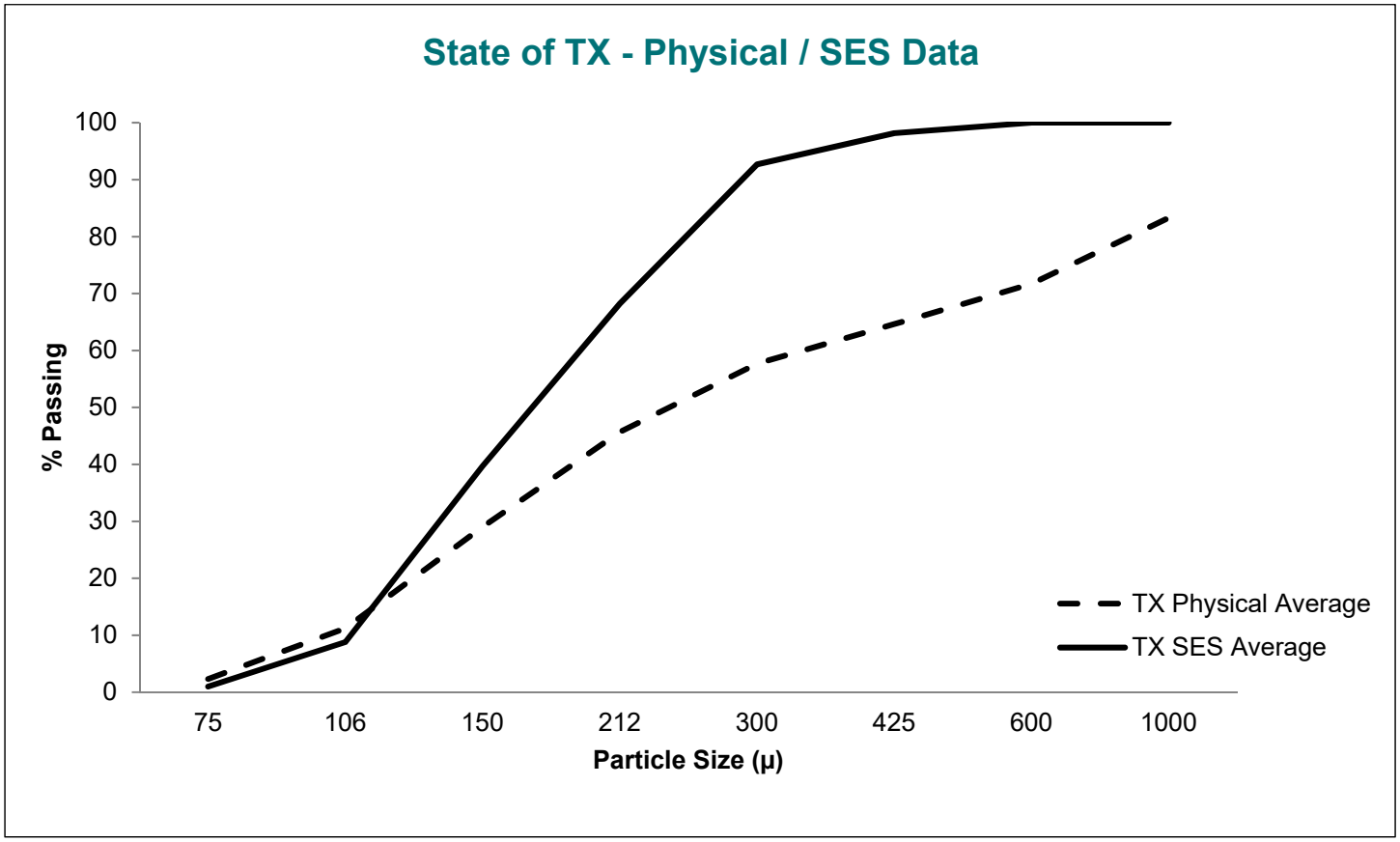

Micron	% Passing 75	106	150	212	300	425	600	1000	
TX Physical Average	2.3	11.2	29.0	45.7	57.7	64.6	71.7	83.3	*Physical*
TX SES Average	1.0	8.8	39.7	68.2	92.7	98.2	100.0	100.0	*SES*

The above table shows the % of grit passing through various sieve sizes based on physical size (unshaded) and Sand Equivalent Size (SES) (shaded). SES provides the settling velocity distribution of the grit particles.

©2017 Hydro International

Standard Terms and Conditions of Sale

1. **DEFINITIONS.** "Hydro" is Hydro International with an address of 2925 NE Aloclek Drive #140 in Hillsboro, Oregon. "Buyer" is the party purchasing the goods from Hydro.

2. **ENTIRE AGREEMENT**. Hydro's agreement is based on these terms and conditions of sale. This document, together with any additional writings signed by Hydro, represents a final, complete, and exclusive statement of the agreement between the parties and may not be modified, supplemented, explained, or waived by parol evidence, Buyer's purchase order, any course of dealing, Buyer's payment or acceptance, or in any other way except in writing signed by Hydro through its authorized representative. These terms and conditions are intended to cover all activity of Hydro and Buyer hereunder, including sales and use of products, parts, and work, and all related matters (references to products include parts and references to work include construction and installation). Hydro's obligations hereunder are expressly conditioned on Buyer's assent to these terms and conditions. Hydro objects to any terms that are different from, or additional to, these terms and conditions. Any applicable detail drawings and specifications are hereby incorporated and made a part of these Terms and Conditions of Sale insofar as they apply to the material supplied hereunder.

3. **SPECIFICATIONS.** Products are supplied in accordance with information received by Hydro, or its duly authorized agent, from Buyer. Hydro shall have no responsibility for products created or sold based upon inaccurate and/or incomplete information supplied to it. Buyer shall ensure that Hydro receives all relevant information in time to enable it to supply the appropriate products.

4. **INSTALLATION AND APPLICATION OF PRODUCTS.** Products supplied hereunder shall be installed and used only in the application for which they were specifically designed. Buyer should not presume that any products supplied by Hydro may be utilized for any applications other than those specified; nor shall Hydro's obligations, including, without limitation, any warranty obligations, survive Buyer's transfer of products supplied hereunder to third parties unless the products are transferred with Hydro's consent. In addition, Buyer shall not use any product supplied hereunder at any location other than at the location for which Hydro has previously received notice from Buyer. Any breach of any of the foregoing restrictions may amount to an infringement of the patent for the products in question and will in any event void all express or implied warranties relating to the products supplied hereunder.

5. **PURCHASE PRICE AND PAYMENT TERMS.** All prices are in U.S. dollars and all payments shall be made in U.S. dollars. Payment terms are as follows:

	Incremental Payment	Cumulative Payment
Upon Approval of Shop Drawings	10%	10%
Upon Delivery of Equipment to Site	80%	90%
Upon Final Acceptance or 45 days following completion of equipment start up	10%	100%

If payments are not made in conformance with the terms stated herein, any unpaid balance shall be subject to interest at a rate 1½% per month, but not to exceed the maximum amount permitted by law. If shipment is delayed by Buyer, the previously agreed date of readiness for shipment shall be deemed to be the date of shipment for payment purposes. If manufacture is delayed by Buyer, a payment shall be made based on purchase price and percentage of completion, with the balance payable in accordance with the terms as stated. If at any time in Hydro's judgment Buyer may be or may become unable or unwilling to meet the terms specified, Hydro may require satisfactory assurance or full or partial payment as a condition to commencing, or continuing manufacture, or in advance of shipment.

Until payment in full has been received by Hydro, this Standard Terms and Conditions of Sale shall constitute a security agreement and Buyer hereby grants Hydro a purchase money security interest in and to the products produced by Hydro hereunder, and any products or proceeds thereof. In particular:

a. Hydro will retain an express purchase money security interest in and to the products and all proceeds thereof.

b. Until full payment for the products is received by Hydro, Hydro reserves the right to retake possession of the products at any time and for this purpose Buyer authorizes Hydro or its duly authorized agent to enter upon land or premises where it believes the product may be.

c. Proceeds of any disposal of the products shall be held in trust for Hydro pursuant to the terms of the Maine Uniform Commercial Code.

d. Buyer grants Hydro a power of attorney for the purpose of filing a UCC-1 financing statement in the name of Buyer to evidence Hydro's security interest in the products.

©2021 Hydro International

6. **BACKCHARGES.** In the event that Buyer is required to make repairs, corrections or modifications to the goods supplied by Hydro, it shall only do so upon written approval from Hydro. Backcharges shall be limited to the costs directly associated in making the repairs, corrections or modifications to the goods supplied by Hydro. The costs of such backcharges shall be subject to approval by Hydro and shall be limited to: (1) directly related labor and material costs, (2) directly related equipment and tool rental at prevailing rates in the project location and (3) Buyer's overhead & supervision costs to make repairs, corrections or modifications to the goods supplied by Hydro. Buyer shall submit complete documentation to Hydro's satisfaction including but not limited to labor time sheets, material lists, and rental fees detailing the nature of the back charges. Backcharges shall be in the form of an adjustment to the contract price or reduction in retained payments and not a direct payment. No incidental or consequential backcharges shall be allowed.

7. **DELIVERY.** The goods are sold DDP (Incoterms 2010) jobsite, freight prepaid to Buyer at job site. Except as outlined in Paragraph 8 below, the risk of loss passes to Buyer after Hydro delivers the goods to the jobsite. Hydro reserves the right to select the method of shipment and carrier. Delivery dates are approximate only and are not a guarantee of delivery on a particular day. Hydro is not liable for failure or delays in deliveries of any cause whatsoever beyond the control of Hydro.

8. **TITLE & INSURANCE:** Title to the product(s) and risk of loss or damage shall pass to Buyer upon delivery to a carrier as outlined in Paragraph 7 above, or, in the event Buyer delays shipment, by the previously agreed date of readiness for shipment, except that a security interest in the product(s) or any replacement shall remain in Hydro's name, regardless of the mode of attachment to realty or other property, until the full price has been paid in cash. Buyer agrees to protect Hydro's interest by adequately insuring the product(s) against loss or damage from any external cause with Hydro named as insured or co-insured.

9. **ERECTION:** Unless otherwise stated in writing, the goods provided hereunder shall be assembled and erected by and at the expense of Buyer.

10. **CANCELLATION & BREACH:** Orders placed cannot be canceled, nor shipments of goods made up, or in process, be deferred beyond the original shipment dates specified, except with Hydro's written consent and upon terms which shall indemnify Hydro against all loss. In the event of cancellation or the substantial breach of Buyer's obligations, as by failing to make any of the payments when due, the parties agree that Hydro will suffer a serious and substantial damage that will be difficult, if not impossible, to measure, both as of the time of entering into this purchase agreement and as of the time of such cancellation or breach. Therefore, the parties agree that, upon such cancellation or breach, Buyer shall pay to Hydro the sums set forth herein below, which sums the parties do hereby agree shall constitute agreed and liquidated damages in such event:

    a. If cancellation or breach shall occur after the acceptance of the purchase order but prior to mailing of submittal documents by Hydro to Buyer, liquidated damages shall be 10% of the selling price.

    b. If cancellation or breach shall occur within thirty (30) days from the mailing of submittal documents by Hydro to Buyer, the liquidated damages shall be 20% of the selling price.

    c. If the cancellation or breach occurs after thirty (30) days from the mailing of submittal documents by Hydro to Buyer, but prior to notification that the order is ready for shipment, the liquidated damages shall be the total of 30% of the selling price plus the expenses incurred, cost of material, and reasonable value of the work expended to fill the order involved herein by Hydro's engineers and other employees, agents and representatives after the mailing of general arrangement drawings by Hydro to Buyer, said sums to be determined at the sole reasonable discretion of Hydro; provided, however, that the total liquidated damages under this provision shall not exceed the total selling price.

    d. If cancellation or breach shall occur after Hydro has notified Buyer that the order is ready for shipment, then the liquidated damages shall be the total selling price, less costs associated with startup or field testing.

11. **MATERIALS OF CONSTRUCTION, PAINTS AND COATINGS**: Buyer is responsible for determining the suitability of, and for giving final approval of, the materials of construction, paints, coatings, etc. to be used by Hydro.

12. **WARRANTY:** Any product that proves defective in material, workmanship or design within twelve (12) months after delivery (or entry into storage) will be, at the discretion of HYDRO, modified, repaired or replaced, or Buyer's payment for the products will be refunded. This shall be Buyer's sole remedy. HYDRO EXPRESSLY EXCLUDES AND DISCLAIMS ANY WARRANTY OF MERCHANTABILITY, FITNESS FOR A PARTICULAR PURPOSE OR OTHER WARRANTIES, EXPRESS OR IMPLIED.

    This warranty does not cover any defects or costs caused by: (1) normal wear and tear of equipment from designed operation. (2) modification, alteration, repair or service of the goods by anyone other than Hydro; (3) physical abuse to, or misuse of, the goods, or operation thereof in a manner contrary to Hydro's instructions; (4) any use of the goods other than that for which they were intended; (5) chemicals or components which were not disclosed to Hydro; (6) storage contrary to Hydro's instructions; or (7) failure to maintain the goods in accordance with Hydro's instructions.

    This warranty does not apply to component parts of the goods that were not both originally designed and manufactured by Hydro, including, but not limited to, valves and controls. These component parts do not carry any warranties by Hydro, and only carry the warranties, if any, of their manufacturers.

©2021 Hydro International

In order for Buyer to make a claim under this warranty, Buyer must promptly, and within the warranty period, notify Hydro in writing of any defect(s) in the goods covered by this warranty. If any defect(s) in the goods covered by this warranty are visible at the time of delivery, Buyer must notify Hydro of the defect(s) in writing within five working days. To make any claim under this warranty, Buyer must also fully comply with written authorization and return instructions from Hydro.

13. **FIELD SERVICE:** Startup/Field Service will only be scheduled upon written request. Buyer shall notify Hydro of schedule requirements at least ten (10) working days in advance, or additional charges may be added to cover late-scheduled travel costs. Additional costs will be limited to those arising out of late-scheduled costs. Should Buyer have outstanding balances due Hydro, no startup / field service will be scheduled until such payments are received by Hydro. Hydro will send documents to Buyer defining the service or startup requirements. Buyer assumes all responsibility for the readiness of the system when it requests startup service. Should Hydro's Field Service Engineer arrive at the jobsite and determine that the system cannot be started up within a reasonable time, Hydro shall have the option to bring the Field Service Engineer home and bill Buyer for time, travel and living expenses. Additional field service is available from Hydro at the prevailing per-diem rate at the time of the request for service plus all travel and living expenses, portal-to-portal. A purchase order or change order will be required prior to scheduling this additional service.

14. **LIMITATION OF HYDRO'S LIABILITY**. Hydro assumes no liability or responsibility for the misuse of its products by Buyer, Buyer's employees, agents or assigns, or other use inconsistent with the use appropriate to the performance specification requirements submitted to Hydro, and Buyer agrees to indemnify and hold harmless Hydro for any loss, costs, expense or liability that it may incur or be put to as a result of misuse or inconsistent use of the products. In addition, Hydro shall have no liability to Buyer for any consequential or incidental damages incurred by Buyer in connection with the contract documents or the products purchased by Buyer. Hydro shall not be liable for any loss which results from delay in delivery caused by any reason beyond its control, including, but not limited to, acts of God, casualty, civil disturbance, labor disputes, strikes, transportation or inability to obtain materials or services, any interruption of its facilities, or act of any governmental authority. The time for delivery shall be extended during the continuance of such conditions. The total liability of Hydro to Buyer in the form of liquidated damages for any loss, indemnity, damage or delay of any kind will not under any circumstances exceed 25% of the Contract Sum.

15. **INTELLECTUAL PROPERTY**. Hydro shall retain sole ownership of all of its intellectual property used or produced in connection with the Project, including but not limited to all drawings, specifications, software, written materials, manuals, marks, business methods, and all other property that is capable of protection by a patent, copyright or trademark (whether or not such protection has actually been sought). Buyer shall not use such intellectual property except for the purpose of confirming the quality of design and/or manufacturing of the products and services set forth in the Proposal. Buyer shall not photocopy, duplicate or in any way copy such intellectual property except for the Buyer's internal purposes only (but not for rendering services or selling products to third persons). Buyer shall not sell, license, assign or transfer the intellectual property protected by this paragraph to anyone. Buyer shall ensure that Owner is in possession of valid licenses for all third-party software (not provided by Hydro) used for the Project, and shall indemnify and hold harmless Hydro against all claims by licensors of such software. Hydro makes no warranty regarding the effect of such third-party software on the performance of the software to be developed by Hydro for the Project and Hydro shall be released from any warranties given to Buyer to the extent that such software causes or contributes to problems. Following acceptance and final payment to Hydro, Hydro will grant to the Owner a non-transferable, non-exclusive license to use the software for the Owner's internal purposes only in the form of the license agreement attached as Exhibit A. Patent: www.hydro-int.com/patents

16. **TAXES.** Prices stated herein do not include any tax, excise, duty or levy now or hereafter enacted or imposed, by any governmental authority on the manufacture, sale, delivery and/or use of any item delivered. An additional charge will be made therefore and paid by Buyer unless Hydro is furnished with a proper exemption certificate relieving Hydro of paying or collecting the tax, excise, duty or levy in question.

17. **INTERPRETATION OF CONTRACT.** This contract shall be construed according to the laws of the State of Maine.

18. **CHOICE OF FORUM**. Buyer and Hydro hereby consent and agree that the United States District Court for the District of Maine or the District Court or Superior Court located in the City of Portland, County of Cumberland, Maine will have exclusive jurisdiction over any legal action or proceeding arising out of or relating to the contract documents, and each party consents to the personal jurisdiction of such Courts for the purpose of any such action or proceeding. Buyer and Hydro further hereby consent and agree that the exclusive venue for any legal action or proceeding arising out of or relating to the contract documents will be in the County of Cumberland, Maine. Each party hereby waives all rights it has or which may hereafter arise to contest such exclusive jurisdiction and venue.

19. **ATTORNEYS' FEES.** If any judicial or non-judicial proceeding is initiated for the purpose of enforcing a provision of this contract, the prevailing party shall be awarded reasonable attorneys' fees in addition to all other costs associated with the proceeding, whether or not the proceeding advances to judgment.

20. **SEVERABILITY.** If any provisions of this contract are held invalid by a court of competent jurisdiction, the remainder of this contract shall not be rendered invalid, and such invalid provisions shall be modified, in keeping with the letter and spirit of this contract, to the extent permitted by applicable law so as to be rendered valid.

©2021 Hydro International

21. **ANTI-BRIBERY.** Hydro International will not engage in any form of bribery or corruption. The offering, giving or receiving of bribes is contrary to Hydro International's values and can play no part in the way in which it carries out its business. Hydro requires you to support our approach and implement provisions consistent with our policy through your own organization and your supply chain. Please find a copy of our Anti-Bribery and Corruption Policy on our website at: https://www.hydro-int.com/sites/default/files/hydro_international_anti-bribery_and_corruption_policy_-_july_2018.pdf

©2021 Hydro International

Hydro International

Grit Snail®

High Performance Grit Dewatering Escalator

Product Summary

Quiescent dewatering retains even the finest grit particles.

The Grit Snail® uses a slow moving cleated belt to gently escalate grit from the clarifier pool without re-suspending fine grit particles which will cause them to escape with the clarifier overflow.

Performance

- Removes 95% of particles 75 µm and larger at the design flow rate when used with a Hydro washing system
- 60% total solids and less than 20% volatile solids when used with a SlurryCup™ or TeaCup®

Capacity

- Dewatering capacity from 1 to 10 yd^3/hr (0.7 to 7.7 m^3/hr) of grit
- Clarifier sizes from 48” to 96” (1.2 to 2.4 m) square
- Belt widths from 6” to 57.5” (0.15 to 1.5 m)
- The Grit Snail® can be configured to match most applications as the clarifier is sized for flow while the belt is sized for grit load

How it Works

A washed grit slurry is discharged into the Grit Snail® clarifier. The clarifier is sized to provide sufficient area for particles as small as 75 micron (µm) to settle. Degritted effluent overflows a weir and goes on to the next process. The captured grit settles to the bottom of the clarifier and onto the belt. The slowly moving belt gently lifts accumulated grit from the clarifier bottom without re-suspending it, eliminating the potential for carry-over. The belt typically moves at 1-2 feet / minute (30-60 cm / minute) which creates quiescent dewatering conditions.

The grit settles onto the stepped cleats and is gently lifted out of the clarifier. Dewatering begins as the grit and fine abrasives are quiescently raised from the clarifier pool. The dewatered abrasives are carried to the top of the Grit Snail®, where they are discharged into a container for disposal. The lined belt housing, stepped rubber belt cleats, and no metal-to-metal contact ensures long component life and minimal wear. The variable frequency drive adjusts belt speed to match changing grit loads.

Grit Snail® Components

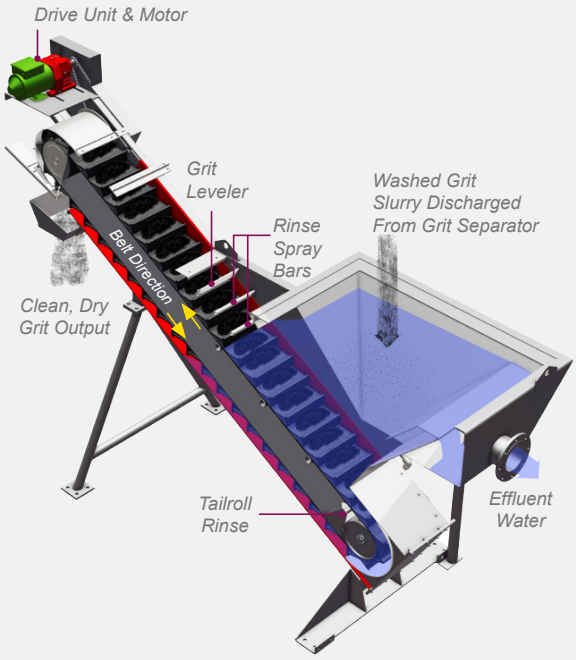

Applications

- Grit dewatering for municipal WWTPs
- Dewaters grit output from a SlurryCup™, TeaCup®, or Grit King® unit
- Sludge degritting or headworks dewatering applications
- Agricultural and industrial applications

Benefits

- Non-turbulent process retains the smallest grit particles
- Durable 304 or 316 stainless steel construction ensures a long product life
- Large clarifier with a low overflow rate provides sufficient time for grit to settle
- Conveys a very large quantity of grit while still retaining fine grit particles as small as 75 µm

Water & Wastewater Solutions

→ hydro-int.com/GritSnail

Configurations

- The SlurryCup™ (or TeaCup®) / Grit Snail® system can either be used for headworks degritting or to degrit concentrated slurry captured from a HeadCell® or a Grit King® separation system
- Multiple inlet and outlet arrangements are available to accommodate plant piping conditions
- The system can be provided with an optional maintenance access platform

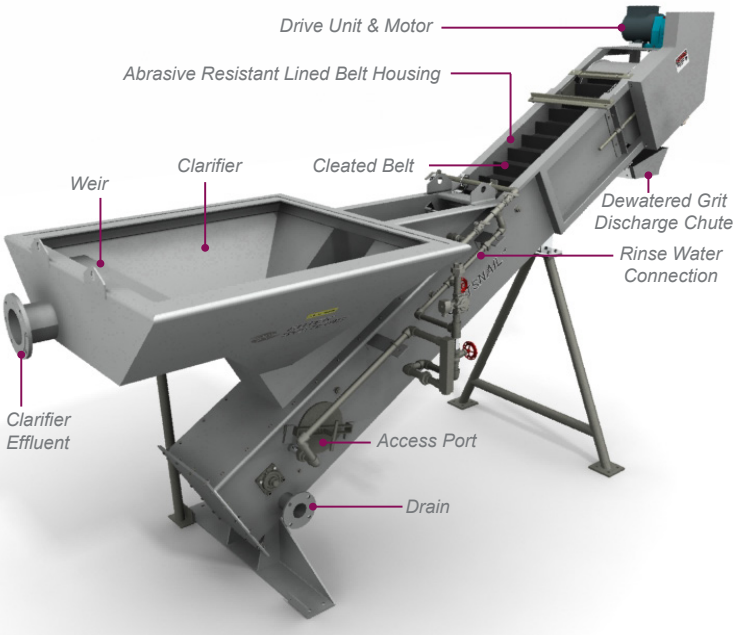



Design Notes

- Large clarifier area allows even very fine grit to settle
- Slow moving belt eliminates grit carry over
- Belt housing is lined with abrasion resistant urethane for long service life



Installed TeaCup® / Grit Snail® system



TeaCup® / Grit Snail® washing and dewatering system

Hydro International

Hydro International
2925 NE Aloclek Suite 140 | Hillsboro, OR 97124
Tel: (866) 615-8130
Email: questions@hydro-int.com
Web: www.hydro-int.com

Learn more

Visit our website to learn how Grit Snail® grit dewatering will protect your plant, reduce your operational costs, and improve the performance of your entire plant.

→ hydro-int.com

Hydro International

HeadCell®

Advanced Stacked Tray Grit Separation

Product Summary

Best performance in the smallest footprint of any grit separation system.

The HeadCell® is the ideal grit separator for both new and retrofit applications. The HeadCell® is a multiple tray separator that can be sized to remove fine grit over a wide range of flows with less than a foot of headloss. The HeadCell® provides unparalleled performance in a small footprint.

Performance

- Removes 95% of particles equal to or greater than 75 micron (µm) at the design flow rate
- Less than 15% volatile solids and greater than 60% total solids when used with Hydro washing and dewatering equipment

Capacity

- Sized for peak flow at peak grit loads
- Virtually no turndown ratio limits
- Modular and expandable combinations to fit any size plant

How it Works

The stack of hydraulically independent polyethylene trays are submerged in a concrete chamber. Screened sewage enters the influent duct and passes into the grit chamber. The influent duct directs the flow into the high efficiency distribution header to evenly distribute the influent tangentially into the modular multiple-tray system.

Tangential feed establishes a vortex flow pattern causing solids to fall into a boundary layer on each tray. Grit settles out by gravity along the sloped surface of each tray and then solids are swept to the center opening which allows them to fall to a common collection sump. Degritted effluent flows out of the trays, over a weir and into an effluent trough.

Often, the settled solids are continuously pumped from the grit sump to an open vortex grit washing system (TeaCup® / SlurryCup™) and then dewatered by either a Grit Snail® dewatering escalator or SpiraSnail®, depending on grit load. An intermittent pumping configuration is also available.

HeadCell® Flow Pattern

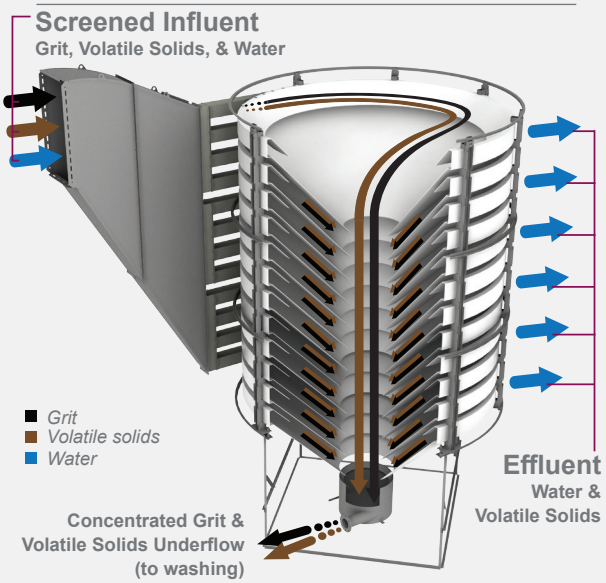

Applications

- New wastewater treatment plants
- Treatment plant retrofits
- Sediment removal pretreatment for potable water
- Grit removal for industrial effluent
- Pre-treatment for MBR and any other advanced processes

Benefits

- Large surface area in a small footprint
- No moving parts or external power source
- Less than a foot (30 cm) of headloss to operate
- Double treatment capacity in the same footprint as existing equipment
- Economical to own and operate
- Easily accommodates high turndown ratios

Water & Wastewater Solutions

→ hydro-int.com/headcell

Configurations

- The HeadCell® is typically placed in a square concrete tank downstream of influent screening eliminating the need for a long approach channel and complicated concrete design. Inlet and outlet orientation and location can be configured to meet many design requirements.
- The HeadCell® may fit into existing basins which can significantly reduce total installed cost. A retrofitted HeadCell® system can increase flow capacity and improve grit capture in the same footprint.
- The HeadCell® can be designed for intermittent grit pump operation to reduce utility costs. A larger diameter and deeper grit sump is provided to allow for grit storage.

Design Notes

- Short settling distances eliminate inefficiency and increase grit capture
- Large surface area effectively uses plant space
- Evenly distributed influent eliminates short circuiting
- Continuous boundary layer flows over hydrophobic surfaces minimizes grease build-up and keeps trays clean
- All-hydraulic design with no moving parts ensures a long product life
- Design headloss is 12” (30 cm) at peak flow. Alternate designs for lower headloss are available

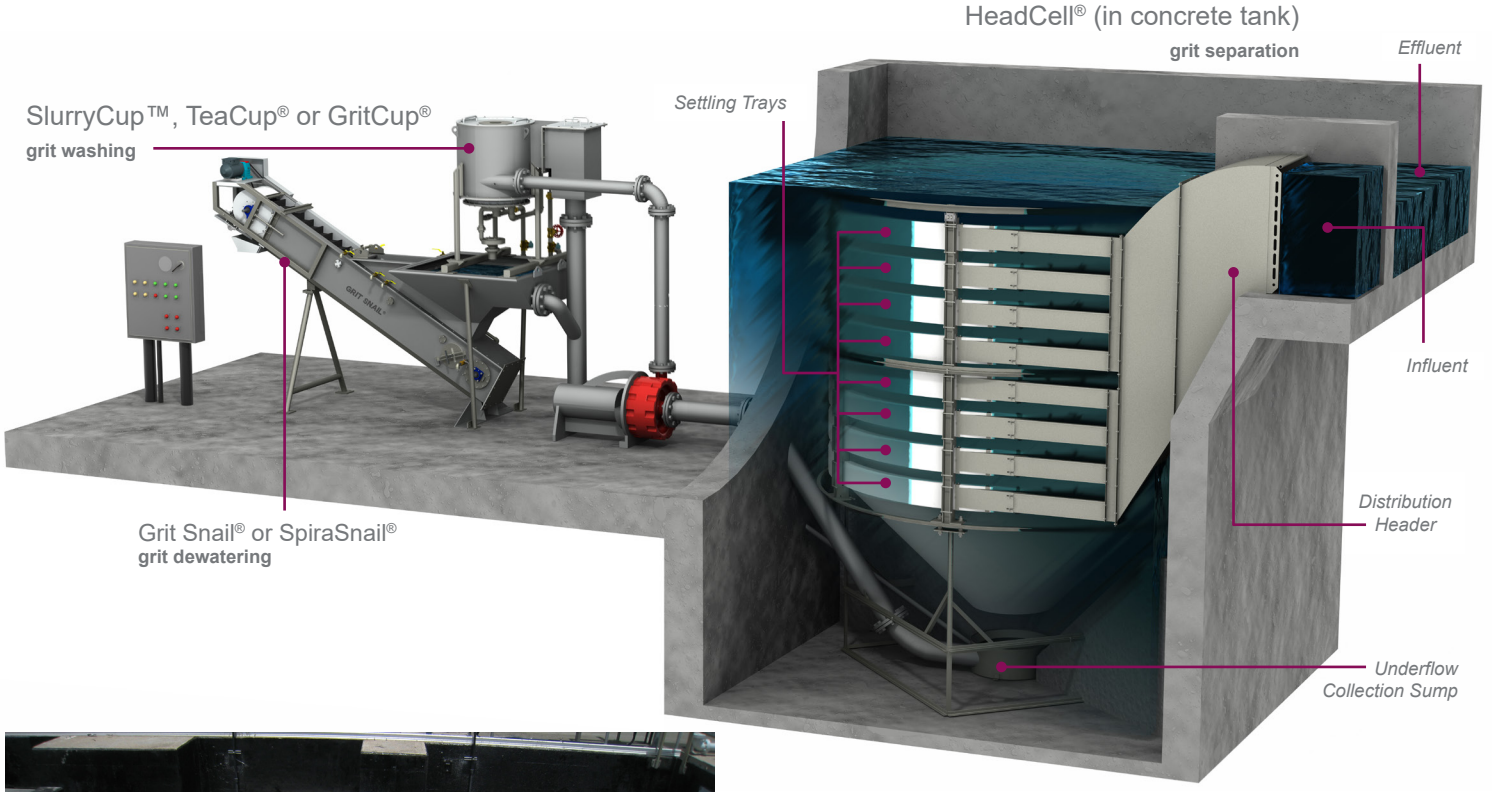



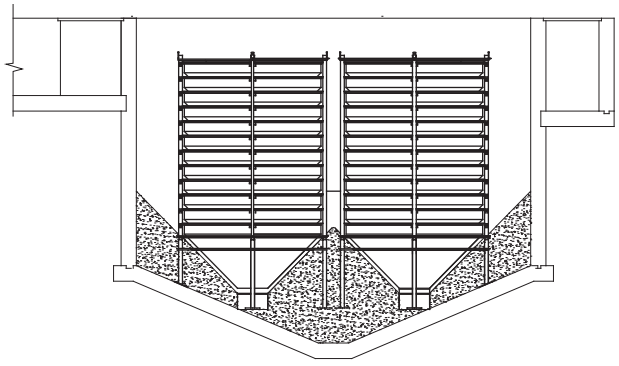

Two HeadCell® Units Retrofitted Into An Existing Grit Basin

Hydro International

Hydro International
2925 NE Aloclek Suite 140 | Hillsboro, OR 97124
Tel: (866) 615-8130
Email: questions@hydro-int.com
Web: www.hydro-int.com

Learn more

Visit our website to learn how HeadCell® grit separation will protect your plant, reduce your operational costs, and improve the performance of your entire plant.

→ hydro-int.com

Patents: hydro-int.com/patents V20.2

Hydro International

TeaCup®

Advanced Grit Removal & Classification

Product Summary

Industry leading performance since 1976.

The TeaCup® is a versatile system well suited for grit removal or grit washing in many plants. The TeaCup® is used for grit collection, grit washing, sediment removal on pumped flows and for classifying and washing grit on systems where batch discharge is required. The system has been shown to pay for itself in as little as 2 1/2 years.

Performance

- Removes 95% of particles equal to or greater than 75 micron (µm) at the design flow rate
- Less than 20% volatile solids
- Greater than 60% total solids

Capacity

- Handles flow of 70 gpm to 8 Mgal/d (44 to 350 L/s)
- Sizes from 24” to 96” (0.61 to 2.44 m) diameter
- Solids concentration up to 1.5%

How it Works

Flow enters the stainless steel vessel tangentially at a controlled rate and velocity. The flow regime established in the device forms a free vortex which results in high centrifugal forces and a thin predictable boundary layer. Grit is forced to the outside perimeter or held in suspension until it falls by gravity into the boundary layer which sweeps the grit, but not volatile solids, into the collection chamber at the bottom of the unit.

The concentrated slurry is collected in the chamber at the bottom of the unit. Periodically fluidizing water is added and the grit is purged from the system. The slurry discharged is clean and ready for dewatering. The water containing the volatile solids exits the top and returns to the WWTP for treatment.

TeaCup® Flow Pattern

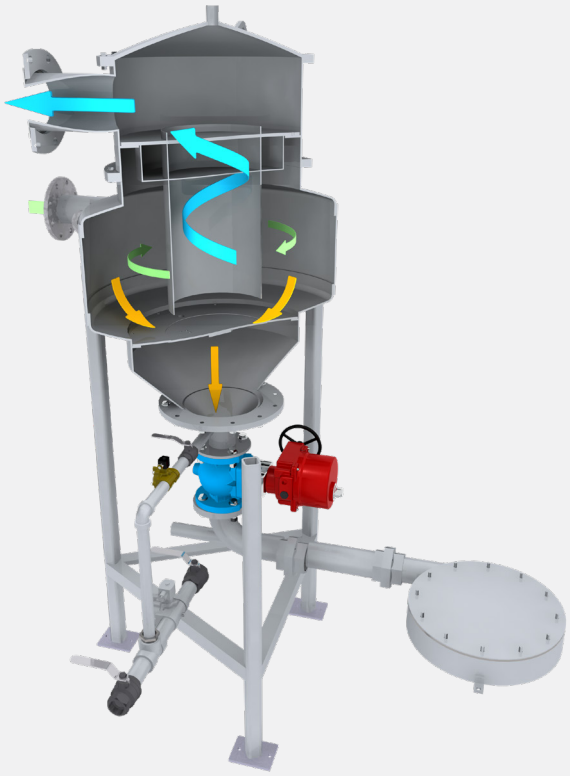

Applications

- Grit removal & washing at WWTP headworks
- Snail shell removal from trickling filters
- Grit system replacement and upgrades
- Sediment removal pretreatment for potable water

Benefits

- An economical alternative to grit chambers for smaller plants
- Durable 304 or 316 Stainless Steel construction
- No moving parts and all-hydraulic design
- Typically requires 1-5 feet (0.31 - 1.52 m) of headloss
- Requires up to 80% less area than conventional grit chambers

Water & Wastewater Solutions

→ hydro-int.com/TeaCup

Configurations

» Inlet and outlet can be oriented to accommodate many piping configurations.



TeaCup® / Grit Snail® with Standard Discharge Box Design

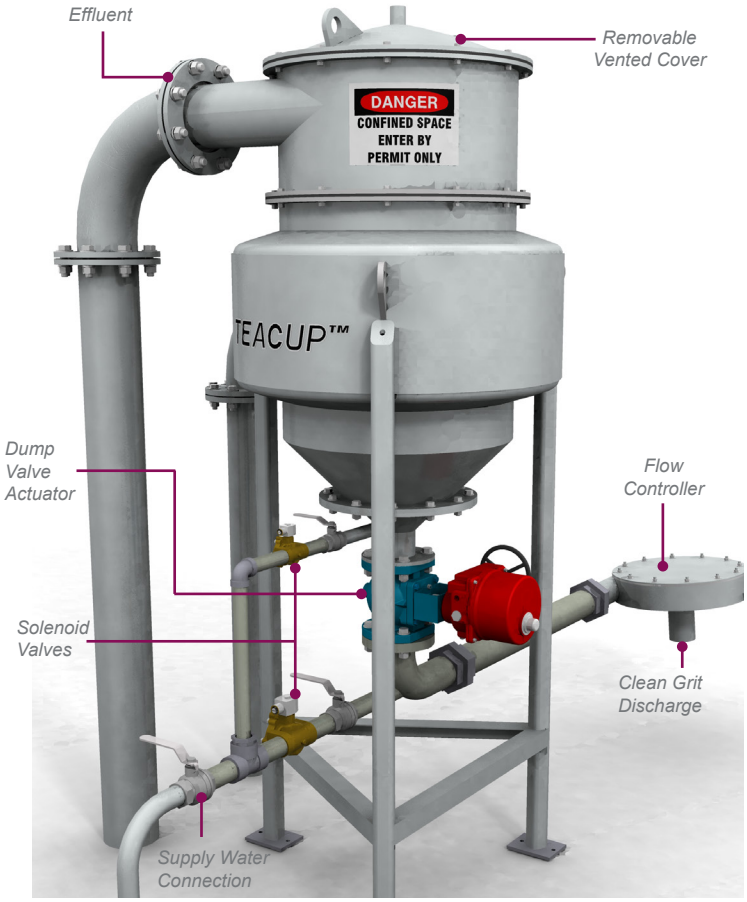

TeaCup® Components with Optional Pressure Cap Design

Design Notes

» Open free vortex design

» Simple operation, long product life

» Large diameter easily handles peak flow volumes

» Prefabricated modular components

» Discharges a clean grit slurry, low in volatile solids

» Standard turndown ratio of 3:1 peak to average daily flow

» Batch processing operation



TeaCup® / Grit Snail® Systems with Standard Discharge Box Design



TeaCup® / Decanter with Optional Pressure Cap Design

Hydro International

Hydro International
2925 NE Aloclek Suite 140 | Hillsboro, OR 97124
Tel: (866) 615-8130
Email: questions@hydro-int.com
Web: www.hydro-int.com

Learn more

Visit our website to learn how TeaCup® grit washing will protect your plant, reduce your operational costs, and improve the performance of your entire plant.

→ hydro-int.com

AQUARIUS Technologies LLC

Company Capabilities

Introduction ...

Originally established in 2006, an opportunity to invest in Aquarius Technologies presented itself in early 2017. The combination of proven product solutions and a team of passionate, experienced and dedicated professionals continue to drive the current and future success of the Aquarius.

The water industry is an essential growth engine, contributing to the well-being of countless people around the world. At Aquarius, we are committed to being an industry leader and bringing positive change in the markets we serve.

We are focused on Aeration and Biological Process solutions, making us specialists to the customers we serve. Our world's future depends on the preservation of water and "out of the box" thinking to solve the challenges of today and tomorrow. Partnering with our customers and focusing on our core competencies assures you of the best in class solution offerings.

Our goal is to foster a reputation for providing solutions representing the lowest-cost-of-ownership to our customers. We participate in projects by providing experience and expertise through process and mechanical system design, manufacturing, quality products and service.

We are also proud of over a decade long commitment to U.S. manufacture and retaining American jobs earning us a reputation for the fewest warranty claims in the market.

We are forward thinking and recognize our role in the preservation of the environment as our company grows and solves our customers' needs through proven solutions.

On behalf of the Aquarius Team, we look forward to your valued business and building a lasting relationship.

To learn more about Aquarius please visit our website at …. **www.aquariustechnologies.com**

Thank you for the opportunity to introduce our Company.

Deborah K. LaVelle

President

Customers We Serve ...

- Public Utilities/Municipalities
- Housing Developments Condos, Single Home Subdivisions, Hotels)
- Schools, Universities, Commercial Buildings
- Parks, Camps, Recreational Areas
- Food & Beverage Industry
- Oil & Gas Industry
- Personal Care Products Industry
- Pharmaceutical and Chemical Industries
- Power Plants and Pulp & Paper Industries



The Aquarius Difference

Aquarius is a global wastewater treatment system provider of the QUANTAER® Fine Bubble Aeration Systems, Coarse Bubble Aeration Systems and proprietary NEBULA® MultiStage Biofilm Systems.

These systems are high quality, cost-effective solutions focused on customers' project objectives lowest cost of ownership and building customer for life relationships.

We deliver products of the highest quality and performance and provide support throughout the project and life of the installation.

Aquarius is an U.S. manufacturer and sources from U.S suppliers. Always has—Always Will!



NEBULA® MultiStage Biofilm Systems

The Solution is Simple

Biological treatment systems are available in a variety of process design configurations. From suspended growth to attached growth, the Nebula MultiStage Biofilm System is designed to utilize microbiology in a smarter way. Flexible and efficient design configurations, simplistic operation and operational savings result in a low-cost-of-ownership solution.

Many experts agree an attached growth biological process offers:

- Compact Footprint
- Simple Operation
- Reduced Biological Solids Production
- Tolerates Hydraulic and Organic Loading Variations
- Eliminates or Reduces Biomass Recycling



Fine/Coarse Bubble Aeration Systems

Our Aeration Systems are Simply the Best

With over a decade of experience, Aquarius' aeration systems are recognized for consistently meeting or exceeding customer expectations. For your next project, allow us to evaluate your application and recommend the best fine or coarse bubble aeration system solution based on the following:

- Application Design Support
- Efficient and Cost Effective System Design
- Proven Performance System Selection
- Unequaled Product Quality
- System Reliability Resulting in Lowest-Cost-of-Ownership



Customer Support

One Team—CUSTOMER FOCUS—One Goal

Our Commitment…

We listen to our Customer first

We focus on providing the best product solutions

We only answer to our Customers …. And

We make retaining our Customers our number one GOAL

Our Added Value...

- Aeration and Biological System Solutions, Application and Design
- Installation and Startup Supervision
- Operator Training
- Operation and Maintenance Assistance
- Testing
- Process Support



Certified WBENC Women's Business Enterprise

© Copyright 2020

420 Technology Way, Suite D | Saukville, WI 53080
P. 262.268.1500 | F. 262.268.1515 | aquariustechnologies.com

AQUARIUS Technologies LLC

Nationally Certified
Small Business Association
Woman-Owned Small Business

WOMAN OWNED BUSINESS

SBA/WOSB Certified

INTRODUCTION

Aquarius Technologies, LLC received Certification as a Woman Owned Small Business (WOSB) from the Small Business Administration (SBA) in February of 2017.

National third part certification from the Women Business Enterprise Council (National Certification was received in August of 2017.

The Women's Business Enterprise National Council (WBENC) is headquartered in the Women's Business Development Center in Chicago, IL.

We are excited to be a part of this program and have assisted customers in meeting these mandatory contract requirements.

We are committed to deliver products of the highest quality, performance and provide support throughout all of our projects.

Aquarius is an U.S. manufacturer and sources from U.S. suppliers.

Should you have any questions, my contact information is listed below.

Thank you for your consideration.

Deborah K. LaVelle

President

P: 262-284-0101
C: 815-218-9936

SBA/WOSB CERTIFICATION

There are two ways to obtain Certification for the SBA/ WOSB Program:

- Self Certification with supporting documents
  - Register in SAM as WOSB or EDWOSB
  - Compile and upload all required documents to the repository
  - When these conditions have been met, the WOSB/EDWOSB can affirm to the Contractor they are self-certified for their respective category in which they are competing.
- Third Party Certification with supporting documents
  - Register in SAM as WOSB or EDWOSB
  - Obtain Certification from a SBA approved third party organization
  - WBENC (Women's Business Enterprise National Council); NWBOC (National Women's Business Owners Corporation); USWCC (U.S. Women's Chamber of Commerce)



WOMAN OWNED BUSINESS

SBA/WOSB Certified

CERTIFICATION

To assist and expedite Evaluation of our Certifications the following information has been provided below:

- Required Agency Registration Information
- SIC Code and NAICS Codes approved for SBA/WOSB and WBE Certification

SIC CODES/ NAICS CODES 2017

SIC Code

- 3589 Service Industry Machinery, not elsewhere classified
- Industry - Manufacturing
- 35890301 - Sewage Treatment Equipment
- Copy of SBA/WOSB Upload dated July 13, 2017

NAICS Code

- 3333318 Other Commercial and Service
- 339900 Other Miscellaneous Manufacturing Sewage -Treatment Equipment
- 541330 Engineering Services

Agency	Classifications	ID Number
SBA	WOSB	Letter of Certification
Dunn & Bradstreet	Number	080545123
Tax Identification	Number	814823061
SIC Code	Standard Industrial Code – Sewage and Water Treatment Equipment	35890301
NAICS	North American Industry Classification System – Other Commercial and Service Industry Machinery Manufacturing	333318
NAICS	Manufacturing – Business Activity Product Service Wastewater Treatment	339900
SAM (System for Award Management)	CAGE Code (Commercial and Government Entity)	7TBY5
GLS		Registered

WOMAN OWNED BUSINESS

SBA/WOSB Certified

Active / Pending Certifications

City / State	Classification	ID Number
Wisconsin	Woman-Owned Business Enterprise (WBE)	WI-8123-WBE
Milwaukee, WI	Women/Disadvantaged Business Enterprise (W/DBE)	Letter of Certification
North Carolina	Historically Underutilized Business (HUB)	Letter of Certification
Virginia	Small, Woman-Owned, and Minority-Owned Business (SWAM)	In Progress
Memphis, TN	Minority and Women's Business Enterprise (M/WBE)	Registered
Nashville, TN	Minority or Woman Owned Business (MWBE)	Registered
Houston, TX	Woman-Owned Business Enterprise (WBE)	In Progress
New York	Woman-Owned Business Enterprise (WBE)	In Progress

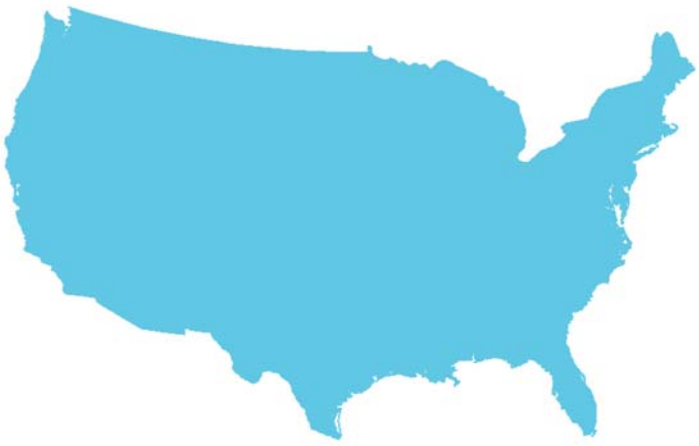

Certified WBENC Women's Business Enterprise

Copyright 2019

420 Technology Way, Suite D | Saukville, WI 53080
P. 262.268.1500 | F. 262.268.1515 | aquariustechnologies.com

AQUARIUS Technologies LLC



QUANTAER® Fine Bubble Aeration Systems

SIMPLY THE BEST

With over a decade of experience in the design, application and operation of wastewater treatment aeration systems, we have the knowledge to select the right diffused aeration system for your application.

Quantaer Fine Bubble Aeration Systems provide:

- Process and Application Design Support
- Mechanical Design Expertise
- Proven System Performance
- Energy Efficiency
- System Reliability though a Proprietary Manufacturing Process
- Ease of Mind - Made in the USA

You can be confident in our Quantaer Fine Bubble Aeration System, where “Q” stands for “Quality.”

Selecting the Right Diffuser

We know every application is unique and selecting the right diffuser makes the difference in meeting performance expectations.

Whether it is our EPDM, EPDM Low Pressure Membrane or Ceramic Disc Diffuser, you can rely on us to recommend a system to meet or exceed your expectations.

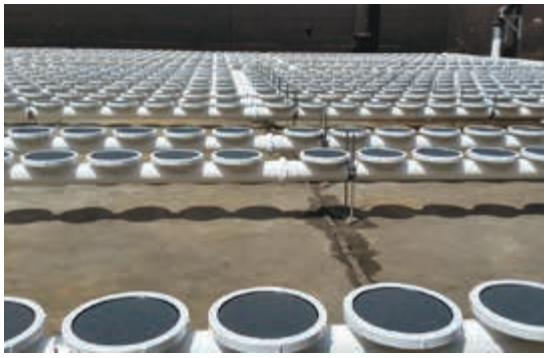

Quantaer Aeration Delivery System

Quantaer Aeration Delivery System

An aeration grid design is only as good as the air delivery system. High performance diffused aeration systems require the right grid design including:

- High Performance Piping and Fixed Joint Design for Durability in all Environmental Conditions
- Proprietary Threading and Retaining Mechanism for Increased Joint Reliability
- Greater Thread Profile, Thicker Retainer Ring and Four-Sided O-ring Compression vs. Comparable Two-Sided Compression
- Anti-Rotational Joints with Infinite Angular Rotation Reduces Joint Stress Decreasing Chances of Leaking and Failure
- Diffuser Holder Manufacturing Process Incorporates Factory Solvent and Ultrasonic Welded Connections
- A Mechanical Bond Stronger than the Pipe
- No Sealing Gaskets for Field Installation
- Field Installation of the Holder Not Required
- Air Purge System
- Removal of Condensation Build Up in Piping Available for Manual or Continuous Operation

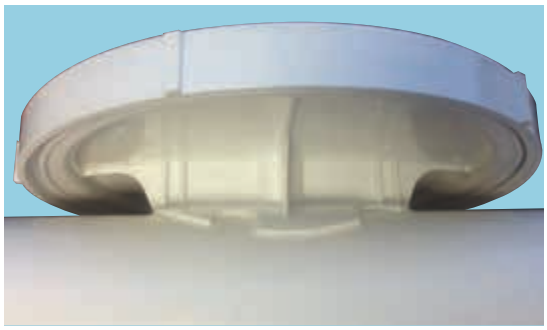

Factory Solvent and Ultrasonic Welded Connections

Materials of Construction

- Dropleg: 304L or 316L Stainless Steel
- Manifold: Stainless Steel or Polyvinyl Chloride (PVC) to Prevent Ultraviolet (UV) Degradation
- Air Distributors: PVC
- Supports and Anchors: 304 or 316 Stainless Steel
- Gaskets: Styrene-butadiene (SBR) Natural Rubber, Ethylene Propylene Diene Monomer (EPDM) or Neoprene

© Aquarius Technologies, LLC | 420 Technology Way, Suite D, Saukville, WI 53080 | 262-268-1500 | info@aquariustechnologies.com | aquariustechnologies.com

EPDM Membrane and Ceramic Disc Diffusers Performance

Quantaer Diffused Aeration System design and performance is based on type, diffuser density, submergence and airflow rates.

EPDM Standard Membrane Disc Diffusers

Aeration solution that seeks greater chemical stability, longer life, and energy efficiency.

- Advanced EPDM Membrane Blend with Less than 10 Percent Extractable Oils
- Aquarius Perforation Pattern is Designed for Increased Oxygen Transfer Efficiencies Resulting in Energy Savings
- Integral Check Valve Prevents Backflow During Intermittent Operation
- Improved Air Distribution Results in Fewer Diffusers Required to Meet Performance Objectives
- Typical Useful Life: 7-10 Years
- Low Cost of Ownership

Operating Range

- Configuration: 9-inch Disc
- Normal Airflow Per Diffuser: 0.5 to 4 SCFM
- Design Airflow Per Diffuser: 1.25 to 1.5 SCFM
- Typical Standard Oxygen Transfer Efficiencies Over 2 Percent Per Foot of Submergence

Applications

Our most versatile Standard EPDM diffused aeration system is designed for biological treatment aeration. Its resistance to fouling and intermittent operation makes it ideal for swing zones in biological nutrient removal systems and mixing applications.

EPDM Low Pressure Membrane Disc Diffusers

Aeration solution providing a wide range of airflows and resistance to fouling.

- Constructed with the Same Chemical Properties as the Standard Membrane Disc Diffuser
- Unique Perforation Pattern Produces Low Headloss and Expands Gradually as Air Flow Increases and is Resistant to Fouling
- Capable of Operating Over a Wide Range of Air Flows While Maintaining Consistent Oxygen Transfer Efficiency
- Integral Check Valve Prevents Backflow During Intermittent Operation
- Typical Useful Life: 7-10 Years
- Low Cost of Ownership

Operating Range

- Configuration: 9-inch Disc
- Normal Airflow Per Diffuser: 0.5 to 10 SCFM
- Design Airflow Per Diffuser: 3 SCFM
- Typical Standard Oxygen Transfer Efficiencies Over 2 Percent Per Foot of Submergence

Applications

A membrane developed for heavy solids, aerated mixing, and industrial applications requiring high air flow rates. The Low-Pressure EPDM diffused aeration system can also be applied in Standard EPDM Diffuser Applications to meet lower headloss requirements.

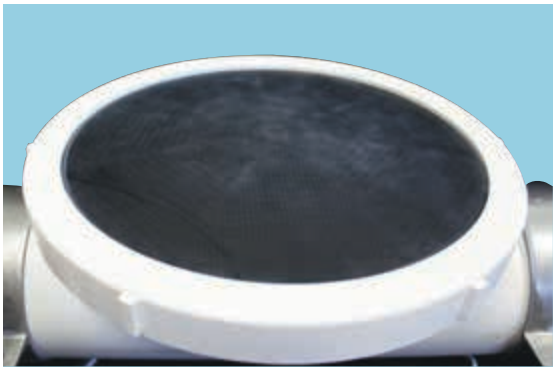

EPDM Disc Diffuser



EPDM Disc Diffuser



Quantaer Fine Bubble Aeration System

© Aquarius Technologies, LLC | 420 Technology Way, Suite D, Saukville, WI 53080 | 262-268-1500 | info@aquariustechnologies.com | aquariustechnologies.com

Ceramic Disc Diffusers

Aeration solution for aggressive and corrosive wastewater requiring high oxygen transfer and energy efficiencies. Diffuser construction:

- Constructed of High Temperature Composite Alumina Oxide Ceramic
- Contoured Profile with Peripheral Channel for Uniform Air Distribution
- Compression of the Ceramic Disc at the Peripheral O-Ring Seat Forces Air to the Center of the Disc, Creating Positive Seal
- Prevents Short Circuiting Near Retainer Ring, Minimizing Diffuser Fouling
- Typical Useful Life: 20 Years
- Clean in Place Gas Cleaning System Available
- Low Cost of Ownership

Operating Range

- Configuration: 9-inch Disc
- Normal Airflow Per Diffuser: 0.5 to 4 SCFM
- Design Airflow Per Diffuser: 1.25 to 1.5 SCFM
- Typical Standard Oxygen Transfer Efficiencies Over 2 Percent Per Foot of Submergence

Applications

Ideal for biological treatment aeration and dependable performance in aggressive industrial wastewater. Recommended for continuous operation over a range of air flows.

Pressure Monitoring System

Diffuser pressure monitoring systems are optional for fine bubble aeration systems and can be provided on each or select aeration grids. Monitoring parameters include:

- Airflow Rate Per Diffuser
- Diffuser Pressure Changes due to Aging or Fouling
- Change in Pressure trends for scheduling of Preventative Maintenance

Cleaning in Place System

An easy-to-use, safe cleaning system without the need to interrupt the process or dewater aeration basins.

When to Clean:

- Increase in Operating Pressure
- Decrease in System Efficiency Indicated by Dissolved Oxygen (DO) Measurements

How to Clean:

- A Small Amount of Cleaning Agent is Introduced into the Process Air Downstream of Each Aeration Grid Drop Pipe
- The Cleaning Agent Combines with the Process Air and is Distributed and Permeates the Diffusers to be Cleaned
- Mineral Fouling is Dissolved and Biological Fouling is Sloughed from the Diffuser Surface

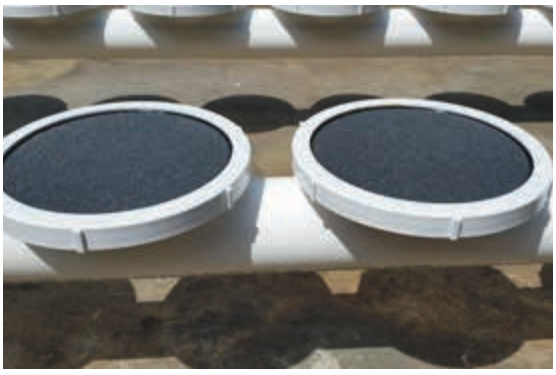

Quantaer Ceramic Aeration System

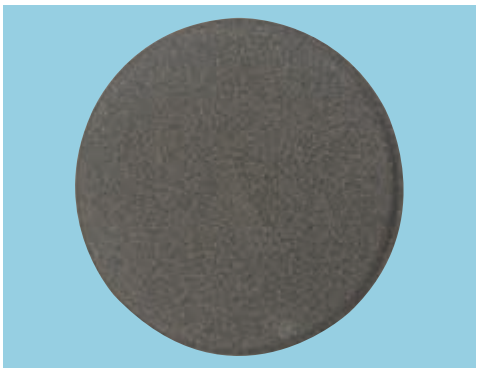

Ceramic Disc Diffuser



Cleaning and Monitoring System

© Aquarius Technologies, LLC | 420 Technology Way, Suite D, Saukville, WI 53080 | 262-268-1500 | info@aquariustechnologies.com | aquariustechnologies.com

Domestic Fabrication
Quality Assurance and Quality Control

Aquarius Technologies, LLC maintains a vigorous QA/QC program for its fabricated components in order to provide for trouble free installation and operation. A number of procedures and standards are employed for our diffusers and aeration piping systems.

In order to maintain our high level of quality control, Aquarius designs, sources and fabricates all of its aeration and process components in the United States. This business decision allows us to closely partner with our suppliers and fabricators to supply a repeatable quality product to meet your critical aeration needs.

Membrane Diffuser Assurance Testing for Dynamic Wet Pressure (DWP), Uniformity and Tensile Strength

- Ceramic diffuser assurance testing for permeability, DWP and strength
- EPDM Membrane diffuser assurance testing for DWP
- Military Standard 105-E protocol



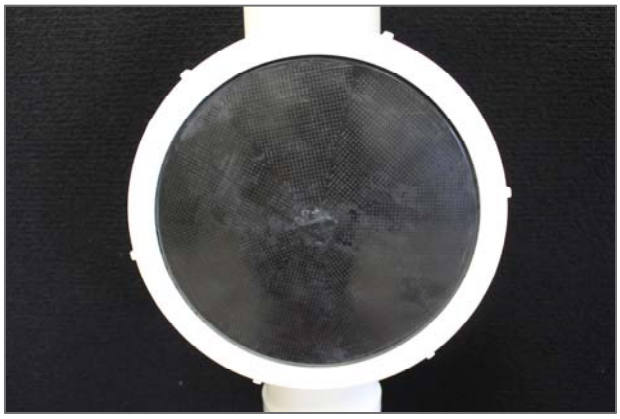

Drop Pipes

- Stainless steel piping in accordance with ASTM A-778/774
- ASME certified welders
- Post fabrication piping is passivated and cleaned per ASTM A-380
- ISO 9001 certified supply source





PVC Piping Manifolds

D-1784, D-1785, and D-3034 (ASTM Standards)

- PLC dimensioning, drilling and cutting.
- Pipe joints factory bonded to the pipe prior to shipment





Quality Assurance Review

- Visual Check of component parts and finished assemblies
- Finished assemblies checked to drawings



PVC Piping Air Distributors



D-1784, D-1785, and D-3034 ASTM Standards

- Diffuser holders are robotically factory solvent welded and fusion bonded to the pipe to insure a structurally superior connection
- Uniform primer application
- Uniform solvent application
- Precise Diffuser holder positioning
- Ultrasonic Staking creates hermetic seal



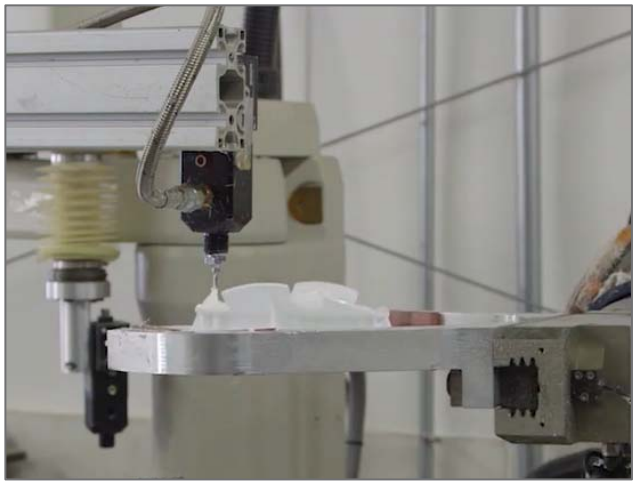



Finished Product

- Ready for final QA/QC check

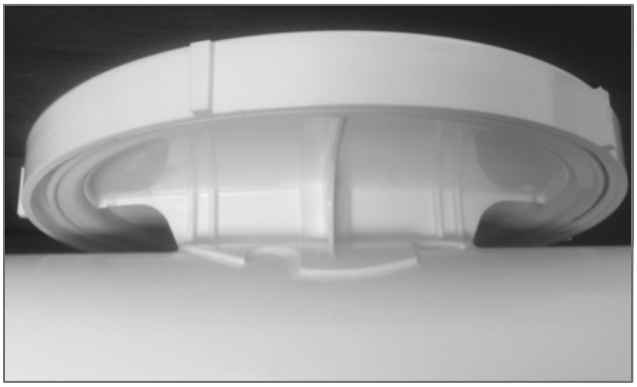



Torque Testing

- Pipe and Holder Assembly Inserted into Restraining Vice
- Holder Subjected to Rotational Torque in accordance with Aquarius QA/QC Procedure.



Air Distribution System Quality Control

- Diffuser holder samples are torque and impact tested to insure proper fabrication



Impact Testing

- Tests the Quality of the Weld between the Holder and Pipe.
- Pipe and Holder Assembly Subjected to Impact in accordance with Aquarius QA/QC Procedure.



© Copyright 2019

420 Technology Way, Suite D | Saukville, WI 53080
P. 262.268.1500 | F. 262.268.1515 | aquariustechnologies.com

QUANTAER®
Fine Bubble Aeration System

Installation Features



Quantaer Fine Bubble Aeration System Installation

Not all Aeration Systems are created Equal

Low Cost Does not Equal = Lowest Cost of Ownership

The Aquarius Difference:

- Diffuser Holder
- Diffuser Element
- Air Distributor Joints
- Air Distributor Supports

When every minute counts ….

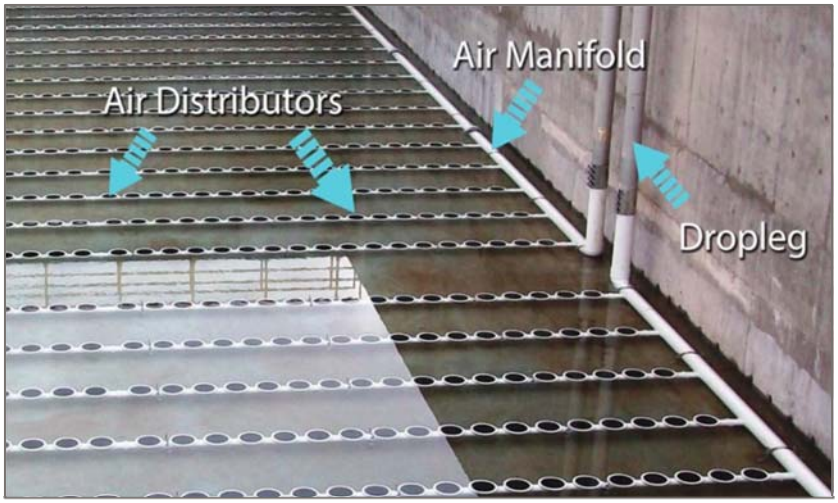

Main Components of Fine Bubble Aeration System



Drop Pipe and Air Manifold Connection



The Diffuser Retainer Ring

The only full contact vs point contact thread design

The Aquarius Difference:

- 120% greater thread depth
- 110% greater flange thickness

Benefit: Minimizes loosening of the retainer ring

The Diffuser Holder

The only robotically manufactured diffuser holder which provides repeatable quality diffuser after diffuser

The Aquarius Difference:

- Low profile, single piece holder and subplate design
- Factory bonded to piping insures a level system
- Solvent AND ultrasonic welding provides no-worry seal

Benefit: Simplified installation



Retainer Ring

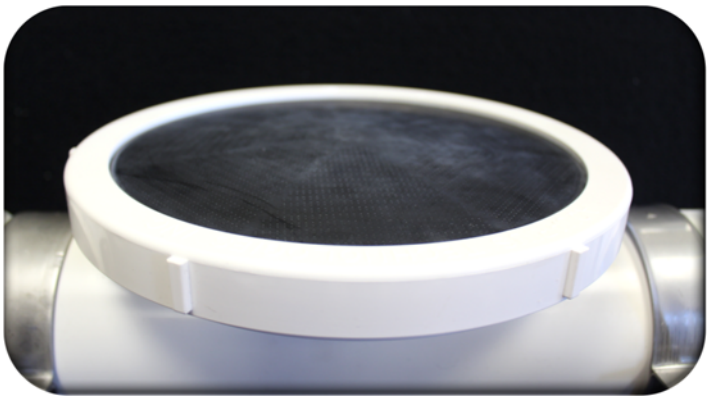

EPDM Membrane Diffuser

The Diffuser

EPDM Membrane manufactured with proprietary perforation pattern. (Also available in Ceramic)

The Aquarius Difference:

- Increase in air flow uniformity up to 5%
- Integrated check valve.
- Typical performance 7-10 years when installed, operated and maintained in accordance with the IOM Manual

Benefit: Less installation

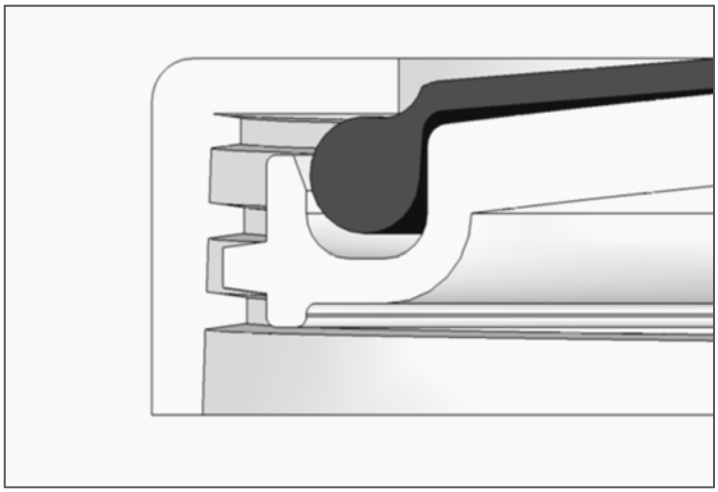

Full Contact Leak Proof Compression



Air Distributor Connected to Air Manifold

The Joint

The weakest link in the system with greatest potential for leaks or failure is the joint

The Aquarius Difference:

- Anti-rotational union style joint provides unimpeded 360° rotation for speed in leveling
- Anti-rotational feature does not stress joint
- Heavy duty boltless fixed union style
- Anti-rotational lugs grip the O-ring
- O-ring compressed on four (4) sides vs two (2) sides reduces chance of leaking
- 120% greater thread depth for positive engagement
- 110% greater flange thickness provides greater compression force.
- Hand tighten joint PLUS 1/4 turns to improve joint integrity.
- Tighten with strap or lug wrench

Benefit: Increased installation rate over expansion couplings or flanges through elimination of nuts, bolts and gasket sets and sleeve and band clamps.



Union Joint

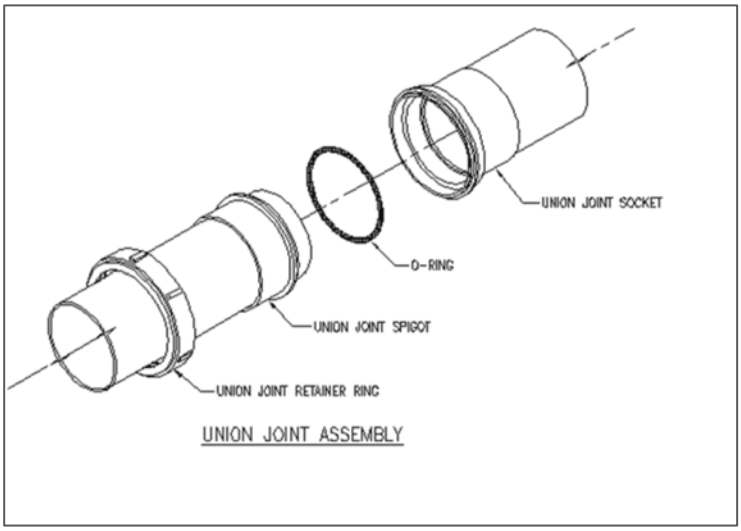

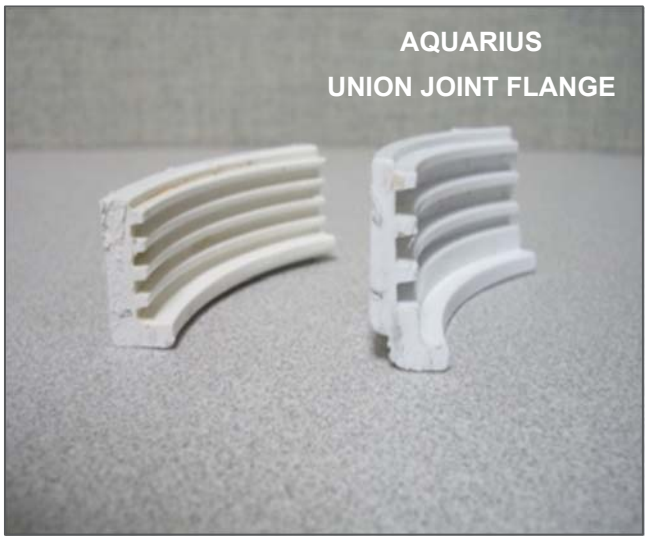



Air Distributors and Supports Installed

The Support

All supports are guide style to accommodate expansion and contraction

The Aquarius Difference:

- Single anchor bolt along centerline of pipe for 4” air distributors or manifolds
- Infinitely adjustable over the height range of the support
- One clamp bolt elevation sets all with the grid
- Locator plate bi-directional, eliminates installation errors and loose supports
- Withstands up to 70% greater torque without damaging deflection.
- Critical for 1/2” anchors bolt requirements

Benefit: Locating plate deflects under the same anchor bolt torque, remains anchored.



Locator Plate

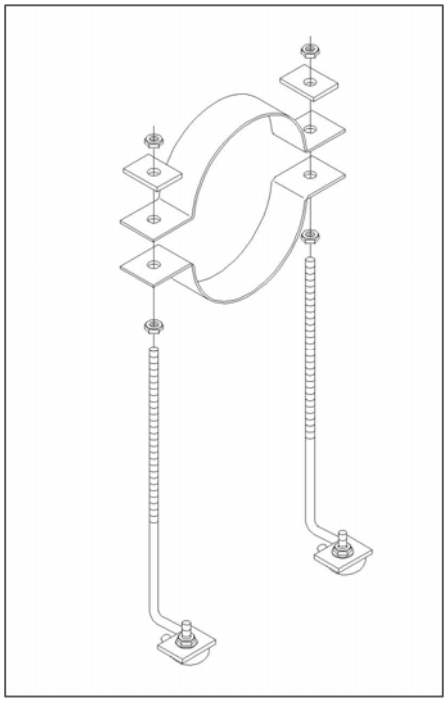

Air Manifold 6” and Above

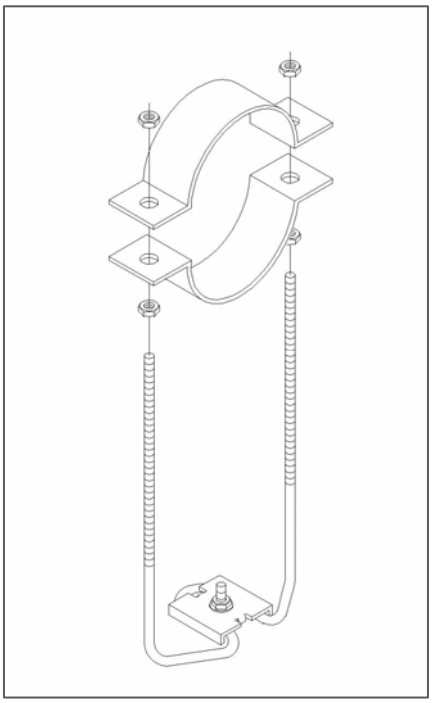

Air Distributor and Manifold 4” Support

© Copyright 2019

420 Technology Way, Suite D | Saukville, WI 53080
P. 262.268.1500 | F. 262.268.1515 | aquariustechnologies.com

CASE STUDY

QUANTAER® Fine Bubble Aeration System Saves Resources

Victor Valley Saves Over 50% On Operating Costs

The Challenge

Victor Valley Wastewater Reclamation Authority (VVWRA) is an 18 MGD activated sludge plant located 90 minutes north of Los Angeles in California. VVWRA uses plug flow extended aeration with anoxic selectors for alkalinity recovery process for biological treatment of their wastewater. The originally installed aeration system utilizing membrane tube diffusers provided insufficient and inconsistent oxygen transfer required for removing ammonia (nitrification). As a result, VVWRA couldn't meet their monthly average ammonia discharge limits on a consistent basis. The inconsistency in nitrification also lead to inconsistent denitrification within the biological treatment process. Inconsistent denitrification, required operation of the Mixed Liquor Recycle (MLR) pumps at 4.75 times the influent flows to remove nitrogen, resulting in excess of $150,000 annually for chemical costs for the addition of alkalinity.

The Solution

In 2013, VVWRA evaluated an energy savings program at VVWRA for four (4) of their aeration basins (basins 9 – 12) by upgrading the existing tube diffusers to 9" Quantaer membrane disc diffusers provided by Aquarius Technologies, LLC.

Collaborating with Mr. Gilbert Perez, the plant's Director of Operation, Aquarius was able to provide designs, calculations and equipment costs to retrofit the plant to newer and more efficient fine bubble disc diffusers. During the initial design, energy and chemical cost savings for the retrofit were expected to be 30 - 40%. However, shortly after the installation, Mr. Perez and operators noticed the higher efficiency of new disc diffusers, dropped the air requirement 15%, and the MLR pump energy requirement by 45%.



Victor Valley Wastewater Reclamation Authority, California



Quantaer EPDM Membrane Disc Diffusers Operating at Startup

As a result, VVWRA is realizing **over $30,000 in annual energy savings**.

VVWRA's operations included dosing magnesium hydroxide (MgOH) for recovering alkalinity in the wastewater, which is consumed in the nitrification process. Since the denitrification process, which recovers alkalinity was inconsistent, large doses of MgOH were regularly required. After the installation of Quantaer Fine Bubble Aeration System, higher oxygen transfer efficiency of the system provided

complete nitrification. The consistency in nitrates recycled into the anoxic tanks allowed for stable denitrification. As a result, the MLR pumps were turned down to 2.5 times the influent flowrate. The denitrification process now recovers sufficient alkalinity to eliminate the need of MgOH dosing thereby **saving VVWRA over $150,000 in chemical costs**!

After twelve months of operating basins 9 - 12, VVWRA contacted Aquarius with a similar request for an aeration retrofit in the remaining 8 basins (basins 1 - 8) as part of Phase 2. Aquarius teamed up with a consulting engineer and contractor to provide a more efficient system to further reduce the operating costs for the plant.

Operational Benefits

- Improved Oxygen Transfer Efficiency
- Improved Nitrification
- Reduced Mixed Liquor Recycle Rate
- Improved Denitrification
- Stable Operation
- Consistently Meeting Discharge Permits

Economic Benefits

- Alkalinity Recovery Eliminating Magnesium Hydroxide Usage
  Annual Chemical Savings: $151,935
- Reduced Electrical Usage
  Annual Electric Savings: $30,875

The high efficiency aeration system and coordination between Aquarius and VVWRA has resulted in a system demonstrating the lowest cost of ownership. Contact Aquarius to learn how your aeration process can be upgraded with a Quantaer Fine Bubble Aeration System and enjoy similar savings at your wastewater treatment plant.



Source: VVWRA Operating Data

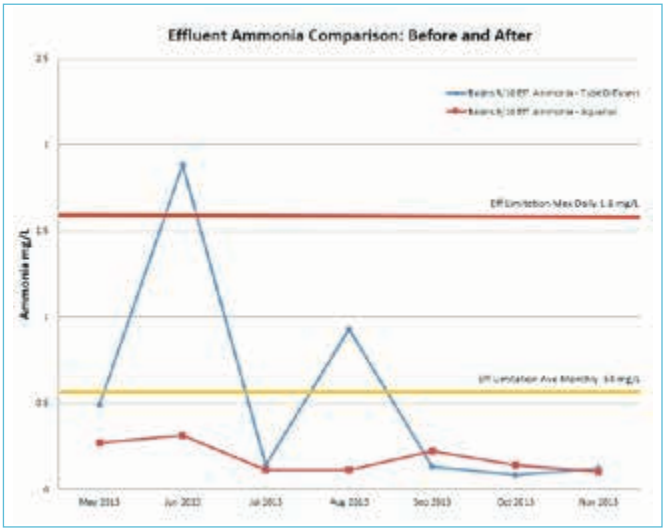



Quantaer Fine Bubble Disc Diffuser System

© Aquarius Technologies, LLC | 420 W. Technology Way, Suite D, Saukville, WI 53080 | 262-268-1500 | info@aquariustechnologies.com | aquariustechnologies.com

CASE STUDY

AQUARIUS Technologies LLC

QUANTAER® Fine Bubble Aeration System Saves Resources

Savings bubble to the top at Washington wastewater treatment plant

The Challenge

Every wastewater treatment plant superintendent has a dream: An efficient, low-maintenance aeration system. The time and labor required to drain a basin, remove the sludge, inspect and clean the aeration system are quite costly. Many superintendents assume this is simply a cost of doing business. But it doesn't have to be this way.

Until recently, Mike Sowers, operations manager of the Birch Bay Water & Sewer District in northwestern Washington state, faced similar challenges. But then he discovered a fine bubble aeration system from Aquarius Technologies that changed his thinking.

The district serves a community of 7,000 people in an area just south of the Canadian border. Its population more than doubles during summer months, when vacationers arrive to enjoy the lush vistas of this Pacific coastal region. Two years ago, these large annual variations in wastewater volume were pushing the Birch Bay water treatment plant to the limit.

"The aeration basins were equipped with 5 to 6 surface aerators and mixers in each basin, which were not adequate for the heavy loads during the summer months," Sowers explains.

"When a wastewater treatment plant is operating at 85% of capacity or above, the state mandates that the plant must be upgraded. That left us with two options: design and build a new aeration basin or switch to fine bubble aeration, which we estimated would increase our capacity by 15 to 20%."

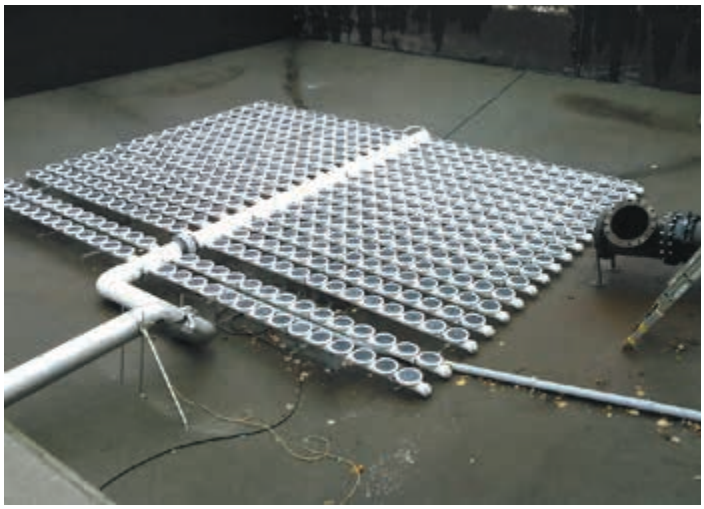

Installation of Fine Bubble Aeration System



Fine Bubble Aeration System in Operation

The Solution

Birch Bay, with the assistance of a local engineer, developed a request for proposal which included evaluation criteria. After evaluation, Aquarius Technologies was selected based on the lowest life-cycle cost (combined purchase, energy, and maintenance costs over the expected life of the

equipment). Aquarius was awarded the design and supply of a new fine bubble aeration system for retrofit into the existing basin.

“We looked at a number of systems, but Aquarius was the most efficient,” he recalls. “Because it’s so energy efficient, we were able to get a grant for $117,600 from Puget Sound Energy to offset our investment in the new equipment.

The design and installation process went much easier than expected. The blowers and underground piping took several weeks, but diffuser manifolds and associated piping arrived partially assembled, or with quick-connect fittings. So it only took the contractor a few days to install the diffusers, he recalls.

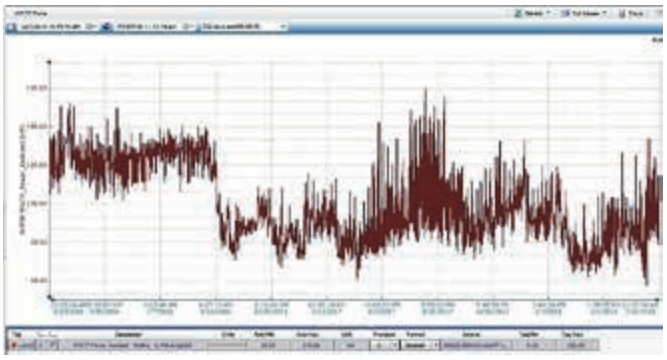

After the fine bubble diffusers were installed in Birch Bay’s aeration basins in September 2016, the plant experienced a significant drop in power consumption, even as the organic loading increased by 25%.

The Results

When Sowers analyzed the operating costs of the Aquarius fine bubble aeration system, he got a pleasant surprise: It was using 20% less electricity than the system it replaced. By extrapolating these cost savings into the future, he calculated that the new aeration system would pay for itself in as little as 15 years.

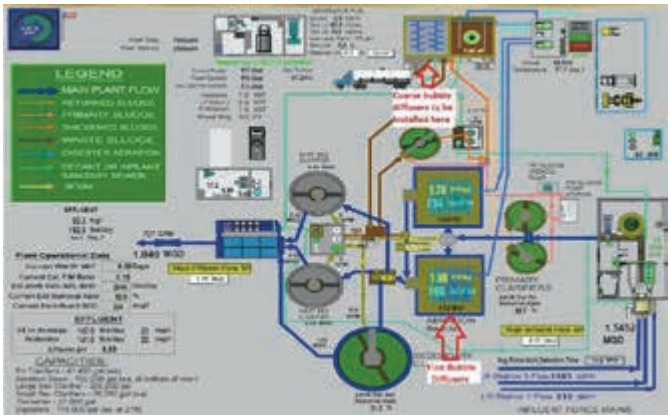

This diagram shows the locations of the Aquarius diffusers in Birch Bay’s wastewater treatment process. The fine bubble systems were installed in the plant’s aeration basins and the coarse bubble systems were installed in its aerobic digesters.

It was also producing far more oxygen than the aeration system it replaced. “We had to figure out how to dial down its performance, so we could minimize the effects of nitrification taking place in the basins,” he says.

Based on Sowers’ positive experience with the Aquarius fine bubble aeration system, he returned to the same supplier to replace problematic diffusers in the plant’s pair of aerobic digesters with a new coarse-bubble aeration system.

“Even though they were equipped with non-plugging diffusers, we’d get hard plugs within a couple of months. When you can’t get air into the digesters, they stink.”

“Cleaning the old diffusers was a super messy, manual process,” Sowers adds. He explains that it usually took a week to drain a digester, remove the thickened sludge from it, pressure wash the basin and refill it. Meanwhile, the other digester would act as a spare and would continue to operate.

“We always run one a bit on the low side, so we have excess capacity when we need to take the other one down for cleaning, It’s also helpful during winter, when inclement weather conditions may prevent trucks from reaching us for several weeks to haul sludge away,” he says.

Sowers hopes the new Aquarius coarse bubble diffusers, which were recently installed, will be able to run for a full year without cleaning. “The flex caps we’re using have a really excellent reputation, so we’re hoping for great things.”

Sowers appreciates working with the small, highly responsive team at Aquarius Technologies. “I love that they offer application and aeration system design services. That means I don’t have to draw up detailed specifications, hire an engineering firm to design the aeration system and create a formalized RFP. All of that adds a lot of unnecessary cost and time to the process. Aquarius’ integrated approach is faster and much less hassle,” he indicates.

© Aquarius Technologies, LLC | 420 W. Technology Way, Suite D, Saukville, WI 53080 | 262-268-1500 | info@aquariustechnologies.com | aquariustechnologies.com

Sowers has worked with larger firms in the past but doesn't like dealing with an ever-changing cast of people. "It gets to be a pain after a while. I really prefer working with smaller firms. Aquarius responds quickly to my questions. They have a wealth of experience in all aspects of aeration," he emphasizes.

For Sowers, it all comes down to managing his costs effectively. "Our costs are the lowest in the region. We're pretty proud of that," he muses. Selecting reliable equipment helps him to keep it that way. "The less time I need to spend on routine maintenance and cleaning, the better," he concludes.

How Much Can You Save?

To learn how Aquarius diffusers can improve the efficiency of your wastewater treatment system, contact us today at **(262) 268-1500**.

© Aquarius Technologies, LLC | 420 W. Technology Way, Suite D, Saukville, WI 53080 | 262-268-1500 | info@aquariustechnologies.com | aquariustechnologies.com

AQUARIUS Technologies LLC

Quantaer®
Fine Bubble Aeration System
Typical Drawings

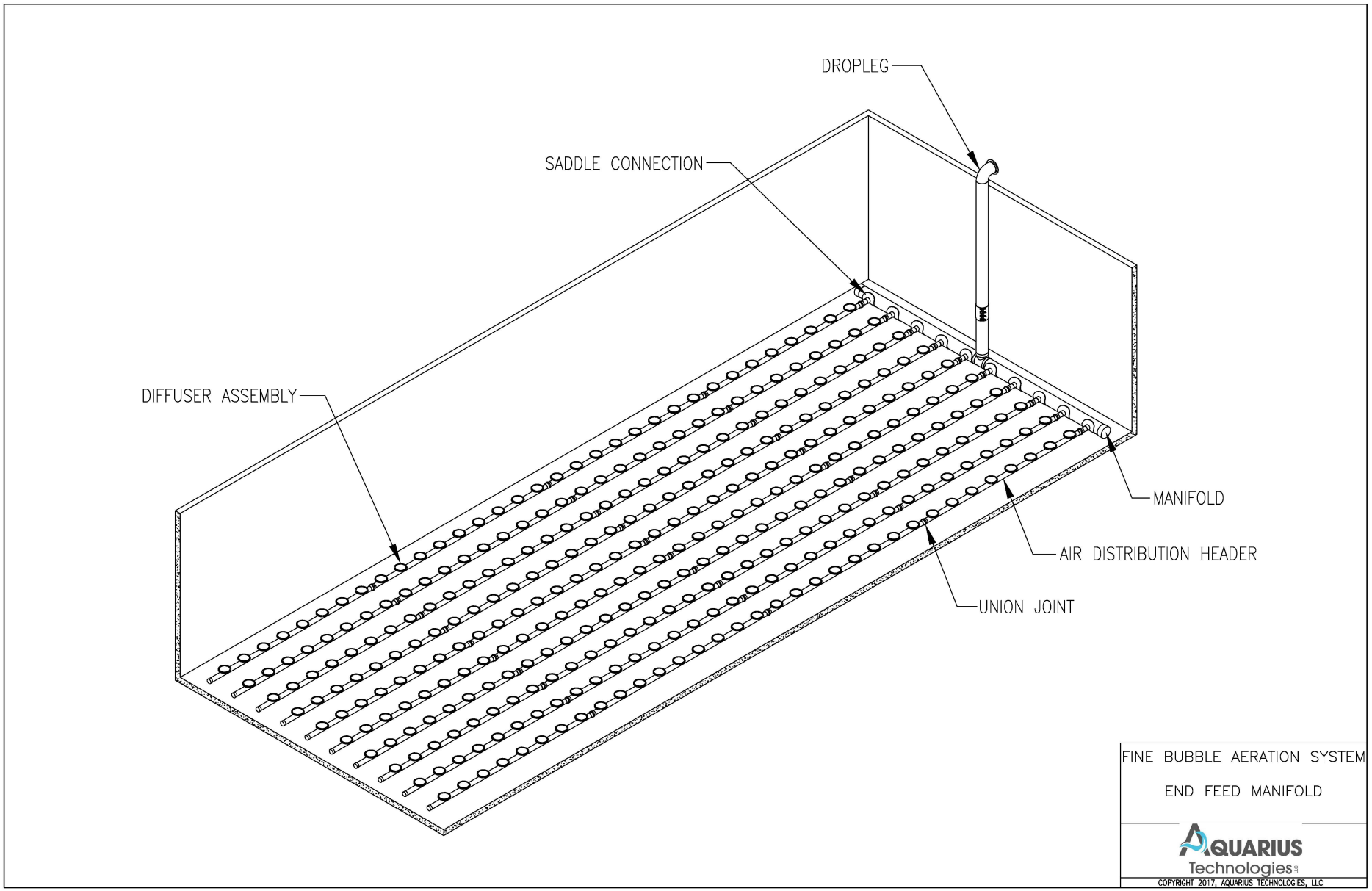

FINE BUBBLE AERATION SYSTEM

END FEED MANIFOLD

AQUARIUS Technologies

COPYRIGHT 2017, AQUARIUS TECHNOLOGIES, LLC

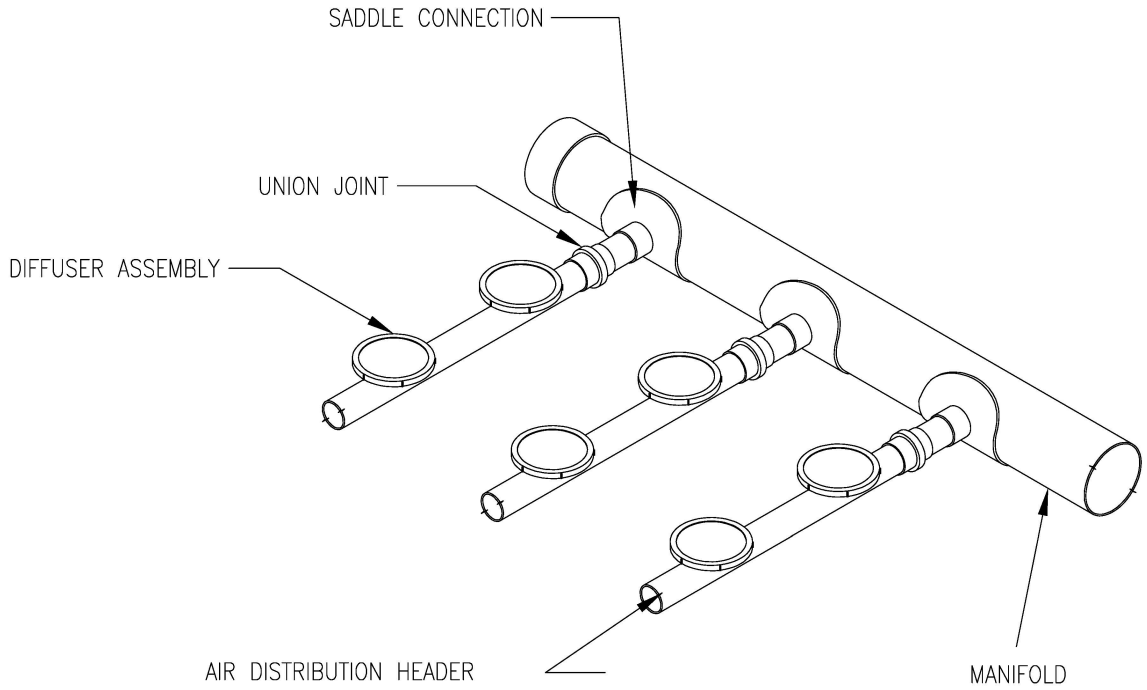

FINE BUBBLE AERATION SYSTEM

END FEED MANIFOLD

AQUARIUS Technologies

COPYRIGHT 2017, AQUARIUS TECHNOLOGIES, LLC

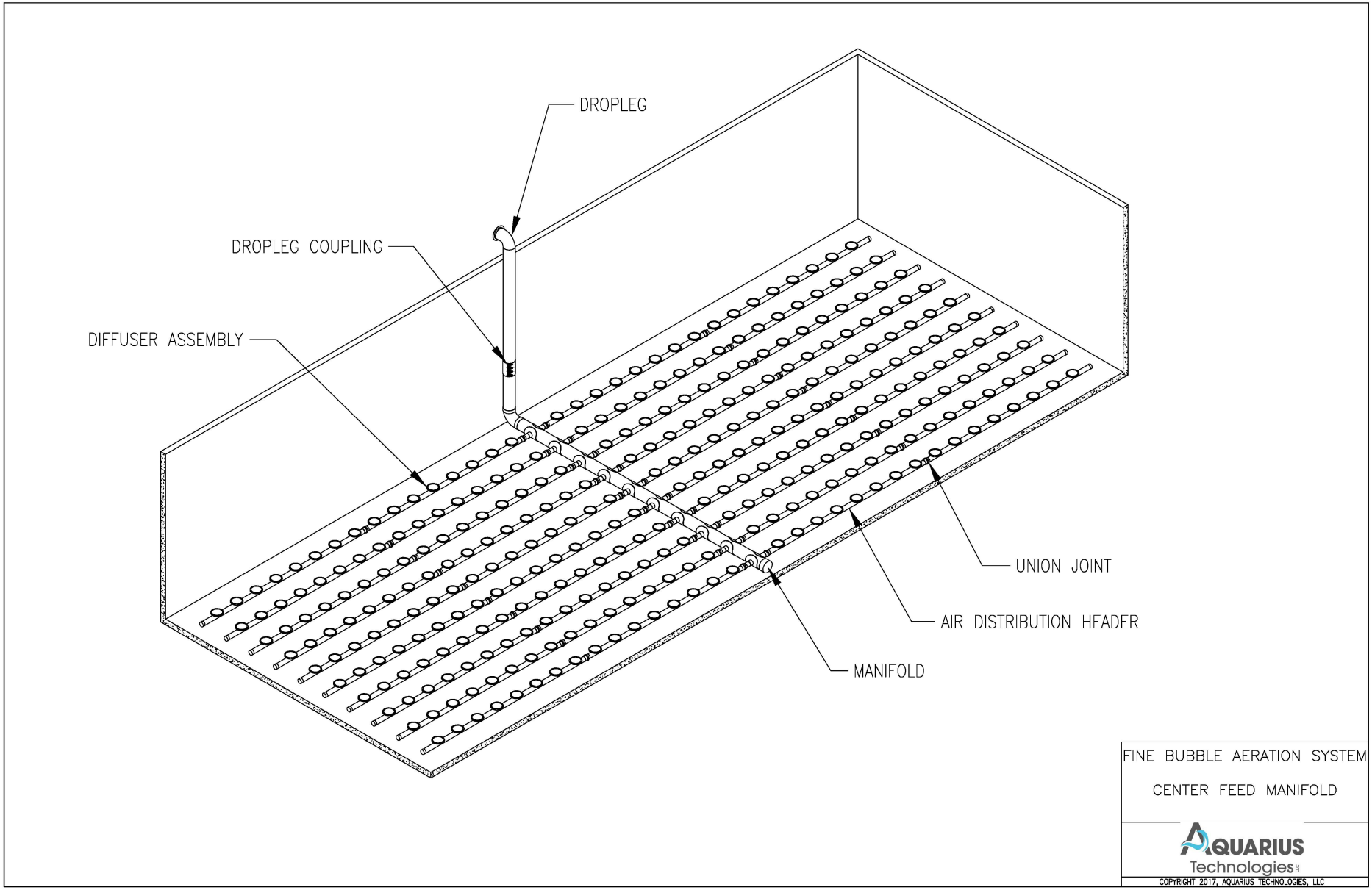

FINE BUBBLE AERATION SYSTEM

CENTER FEED MANIFOLD

AQUARIUS Technologies

COPYRIGHT 2017, AQUARIUS TECHNOLOGIES, LLC

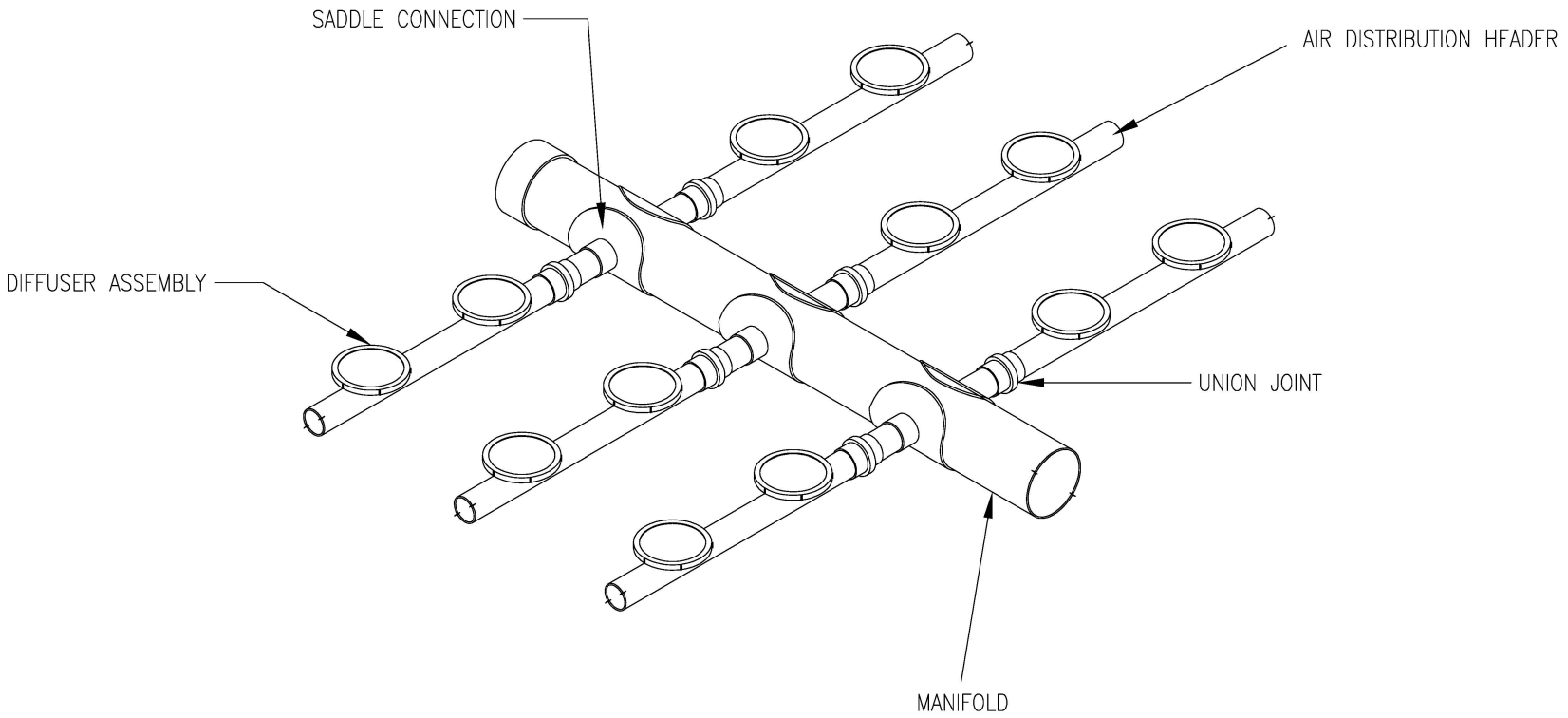

FINE BUBBLE AERATION SYSTEM

CENTER FEED MANIFOLD

AQUARIUS Technologies

COPYRIGHT 2017, AQUARIUS TECHNOLOGIES, LLC

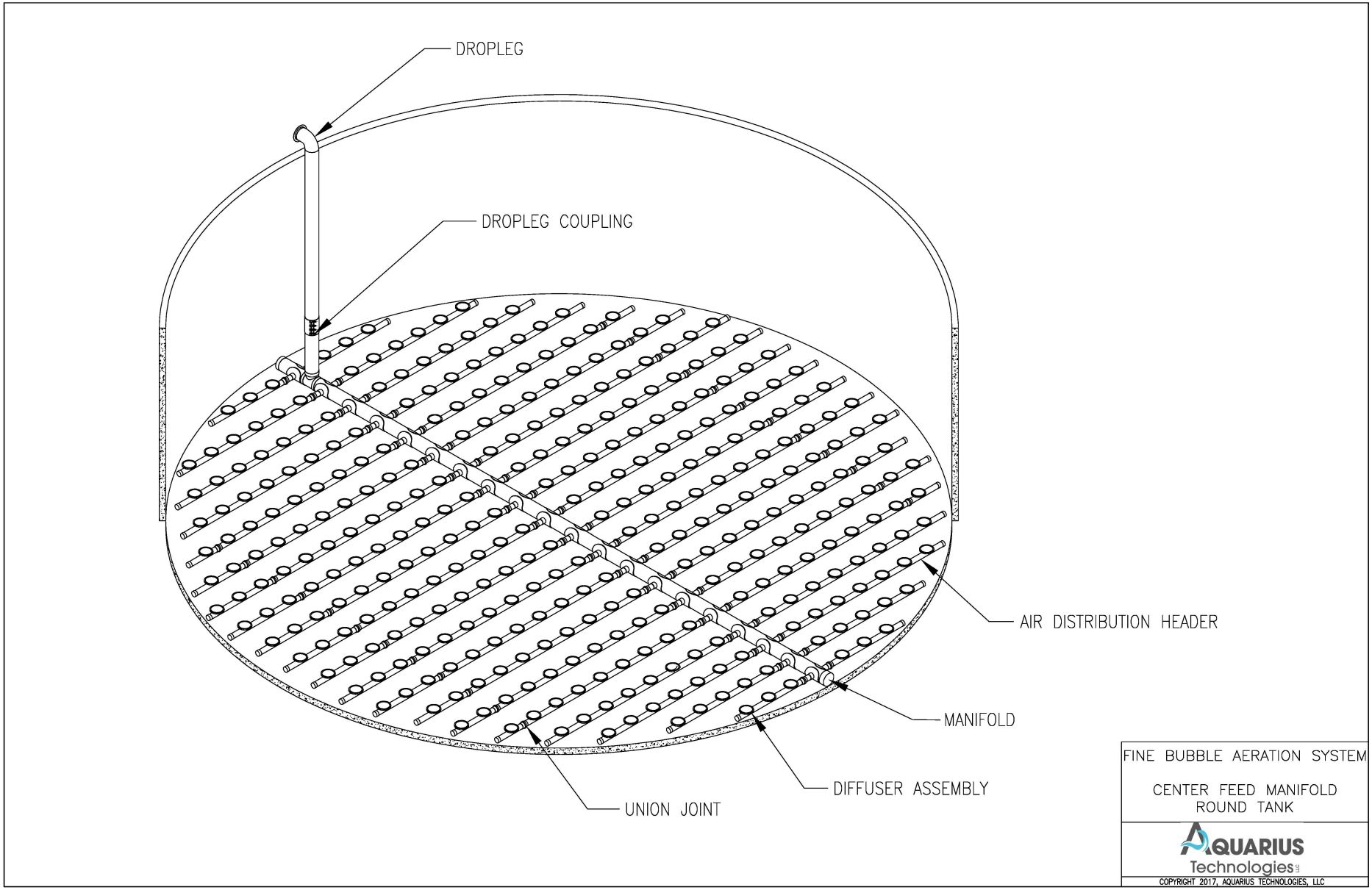

FINE BUBBLE AERATION SYSTEM

CENTER FEED MANIFOLD
ROUND TANK

AQUARIUS Technologies

COPYRIGHT 2017, AQUARIUS TECHNOLOGIES, LLC

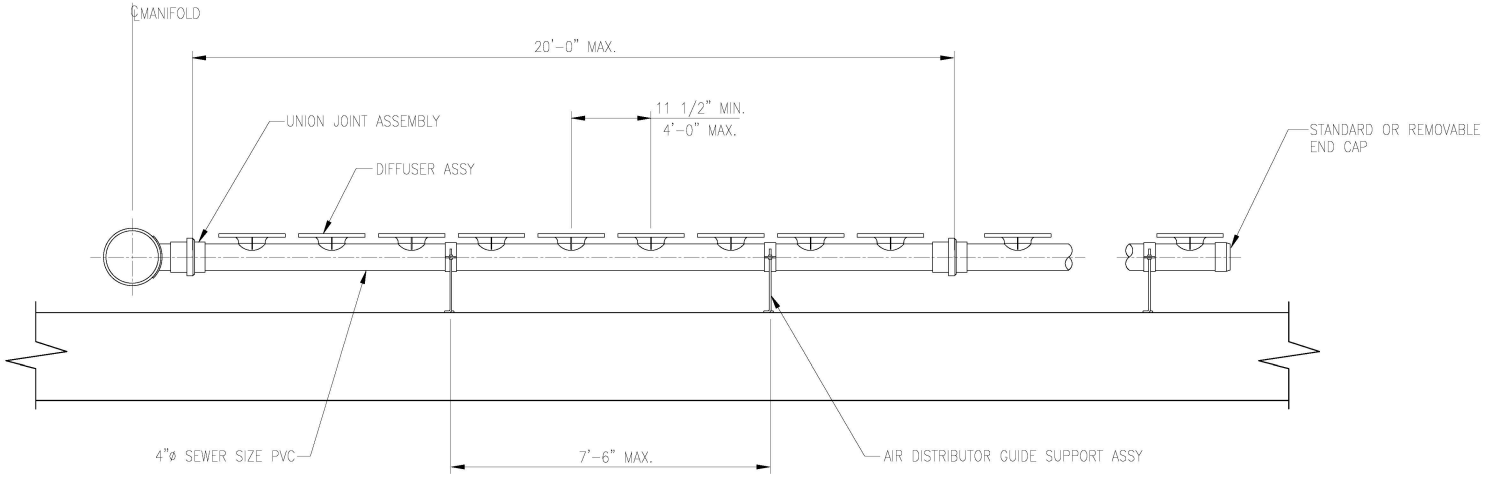

TYPICAL HEADER SECTION

FINE BUBBLE AERATION SYSTEM

TYPICAL HEADER

AQUARIUS Technologies

COPYRIGHT 2017, AQUARIUS TECHNOLOGIES, LLC

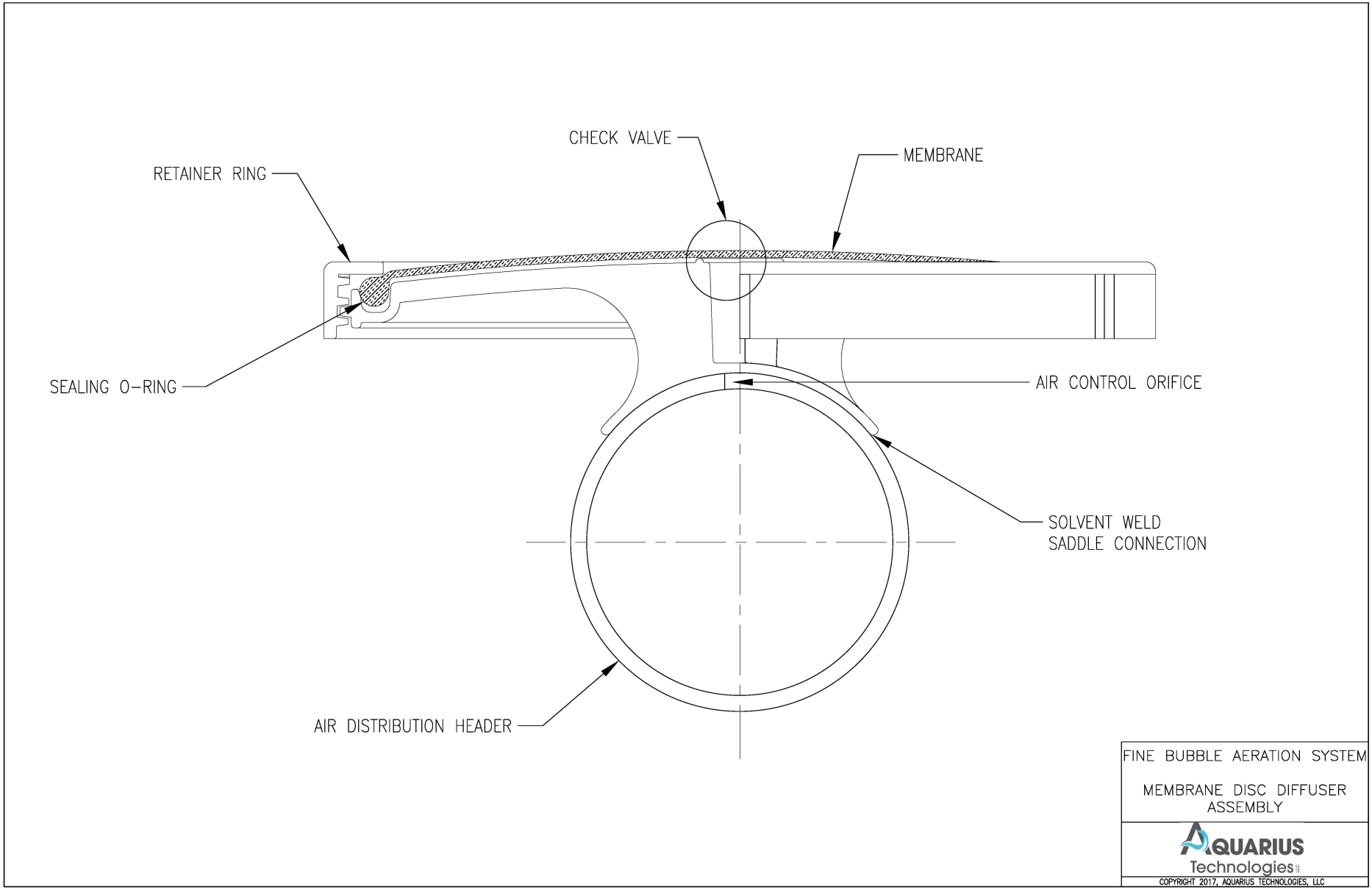

FINE BUBBLE AERATION SYSTEM

MEMBRANE DISC DIFFUSER ASSEMBLY

AQUARIUS Technologies

COPYRIGHT 2017, AQUARIUS TECHNOLOGIES, LLC

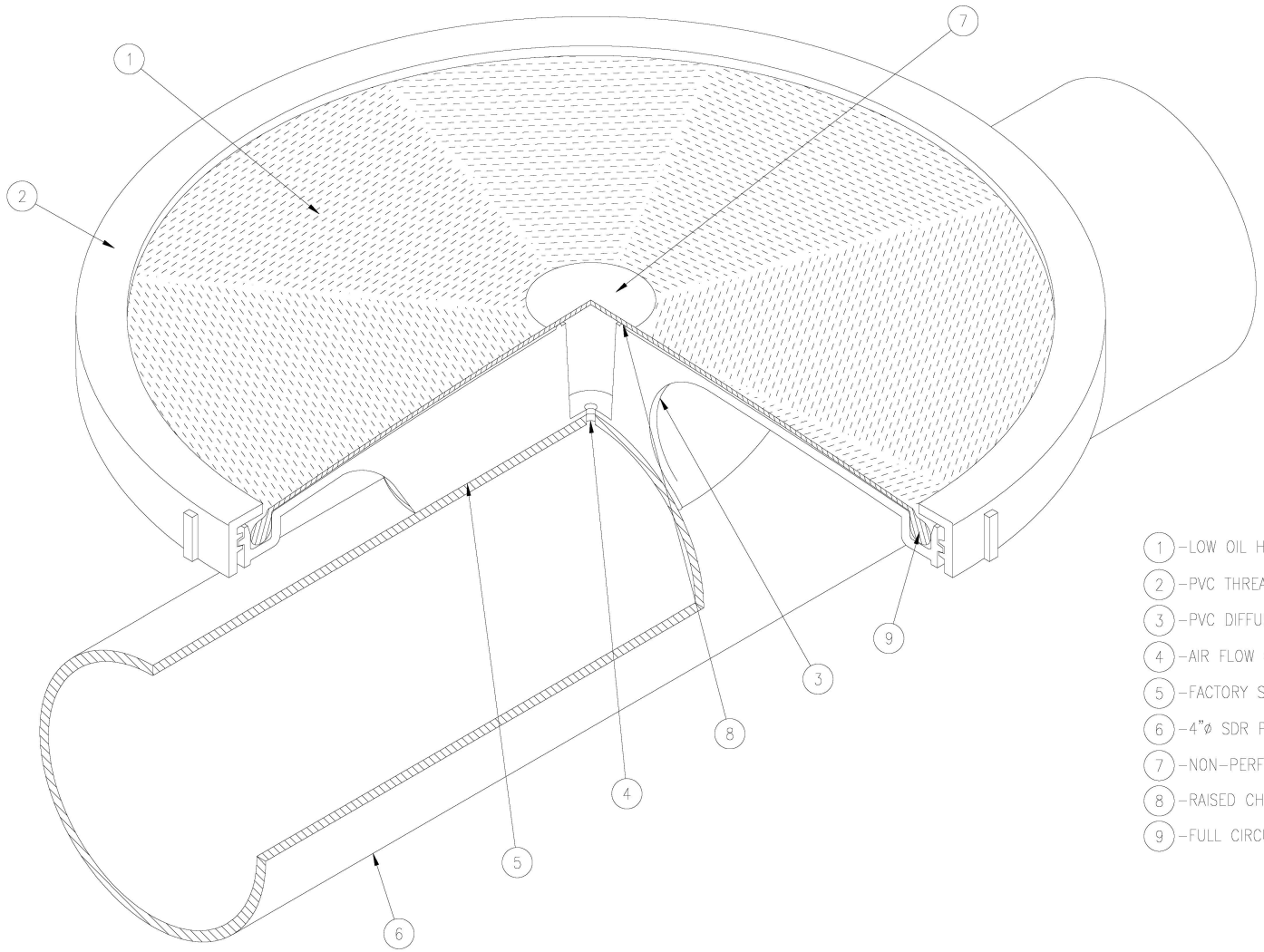

1 –LOW OIL HIGH EFFICIENCY EPDM MEMBRANE DISC DIFFUSER
2 –PVC THREADED DIFFUSER RETAINING RING
3 –PVC DIFFUSER HOLDER WITH INTEGRAL SUPPORT PLATE
4 –AIR FLOW CONTROL ORIFICE
5 –FACTORY SOLVENT AND SONIC WELDED BOND
6 –4"Ø SDR PVC AIR DISTRIBUTOR
7 –NON–PERFORATED CHECK VALVE
8 –RAISED CHECK VALVE SEAT
9 –FULL CIRCUMFERENCE INTEGRAL SEALING O–RING

FINE BUBBLE AERATION SYSTEM

MEMBRANE DISC DIFFUSER ASSEMBLY

AQUARIUS Technologies

COPYRIGHT 2017, AQUARIUS TECHNOLOGIES, LLC

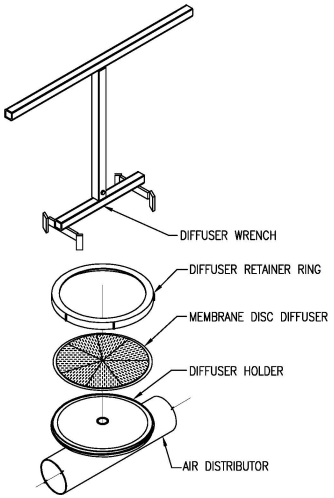

MEMBRANE DISC DIFFUSER ASSEMBLY

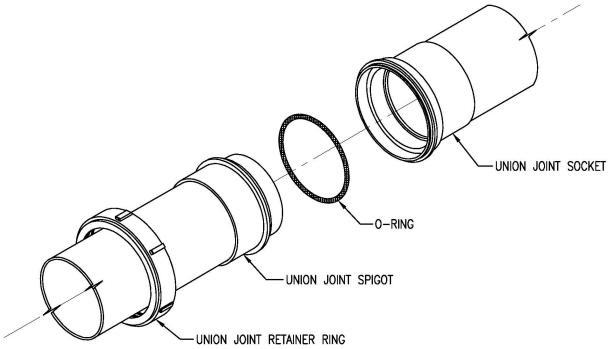

UNION JOINT ASSEMBLY

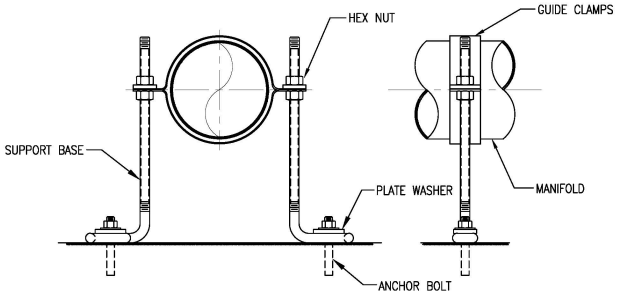

MANIFOLD SUPPORT ASSEMBLY

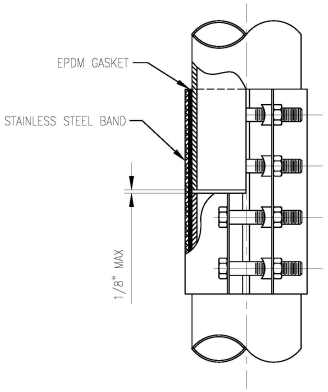

CLAMP COUPLING

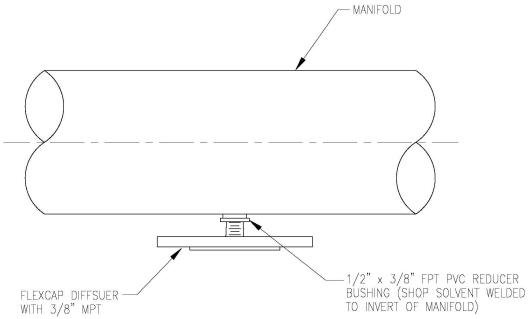

CONTINUOUS PURGE ASSEMBLY

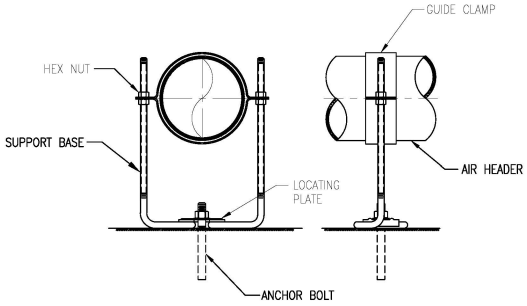

GUIDE SUPPORT ASSEMBLY

FINE BUBBLE AERATION SYSTEM

COMPONENT DETAILS

AQUARIUS Technologies

COPYRIGHT 2017, AQUARIUS TECHNOLOGIES, LLC

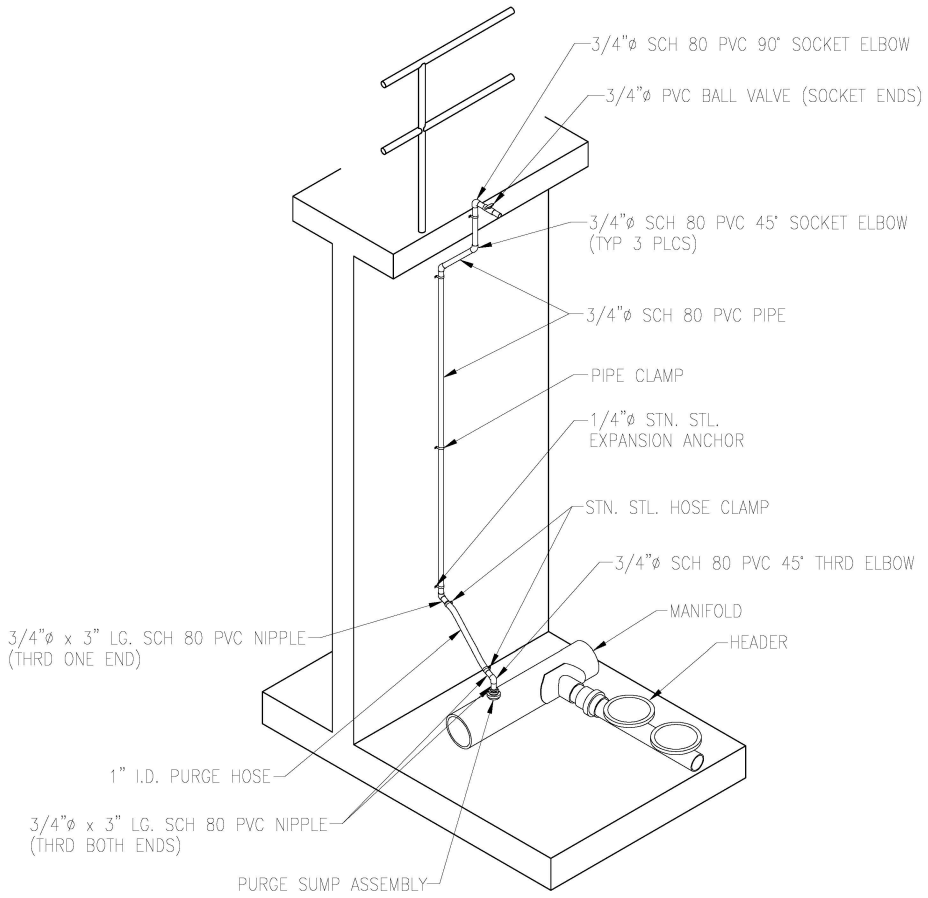

MANUAL MOISTURE PURGE ASSEMBLY

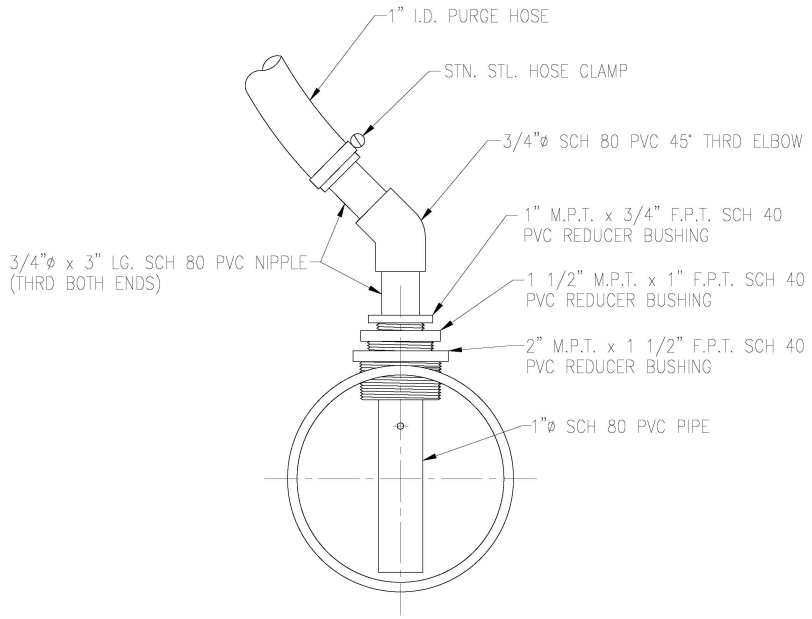

PURGE SUMP ASSEMBLY

FINE BUBBLE AERATION SYSTEM

MANUAL MOISTURE PURGE ASSEMBLY

AQUARIUS Technologies

COPYRIGHT 2017, AQUARIUS TECHNOLOGIES, LLC

Quote No. 2352557
Revision No. 01
Date: June 7, 2021



Energy-Efficient products

Budget Proposal

West U WWTP
Houston, TX



Guaranteed local support



Expert analysis of your compressed air system



Named as one of the top 100 Sustainable Companies in the world for five consecutive years

GLOBAL100 Most Sustainable Corporations in the World

Quote No. 2352557
Revision No. 01
Date: June 7, 2021

Date: June 7, 2021

Attn: Jeff Houston

Project: West U WWTP Budget Proposal ZS Screw Blower Options

We thank you for your above referenced inquiry, and are pleased to submit our quotation for your consideration.

Please see the next page for a summary of our offer. Full details can be found in subsequent pages.

We hope you find our quotation in line with your requirements. However, if you have any questions, please do not hesitate to contact us.

Sincerely,

Gatlin Gold
Regional Municipal Sales Manager
Southern and Western U.S.
Email: gatlin.gold@atlascopco.com
Phone: 281-776-4941

Quote No. 2352557
Revision No. 01
Date: June 7, 2021

Budget Proposal

The following is a price summary for this quotation. Please see item specific pages for more details.

Item Number	Description	Equipment	Unit Price	Qty	Extended
Option 1	Rotary Screw Blower w/ Integral VFD & Controls	ZS4VSD 55kW-K-0.8	$86,448	3	$259,343
Option 2FB	Rotary Screw Blower w/ Integral VFD & Controls	ZS4VSD 45kW-H-1.0	$81,273	3	$243,818
Option 2CB 1+1	Rotary Screw Blower w/ Integral VFD & Controls	ZS4VSD 37kW-F-1.0	$76,519	2	$153,039
Option 2CB 2+1	Rotary Screw Blower w/ Integral VFD & Controls	ZS26VCA 26kW-H	$61,634	3	$184,903
Option 3	Rotary Screw Blower w/ Integral VFD & Controls	ZS5VSD 75kW-L-1.0	$116,658	3	$349,975

SCOPE OF SUPPLY: Any work or equipment beyond the scope of this proposal will be performed or provided only after customer approval and acceptance by our company. No assumption should be made that anything not specifically defined is included.

VALIDITY: This quotation is valid for 60 days.

PRICE: The price quoted is for all items purchased at one time. Partial orders may be subject to a price adjustment. Rental fees can be applied to purchase price of equipment.

PAYMENT TERMS: Our standard terms and conditions are attached.

TAXES: Not Included

FREIGHT: Included

SHIPMENT: 18 Weeks from signed and approved submittals (22 Weeks for ZS5)

SUBMITTALS: Submittal generation 4-6 weeks from approval of PO.

WARRANTY:

Complete Unit: 12 months from commissioning or 15 months from shipment whichever is earlier.
Element: 60 months from shipment.

START-UP: Included

QUALITY STANDARDS: All of our manufacturing locations are ISO 9001-2008 certified.

TERMS AND CONDITIONS: Our standard terms and conditions are attached.

Quote No. 2352557
Revision No. 01
Date: June 7, 2021

Scope of Supply

Equipment	Qty.
Option 1: Rotary Screw Blower – ZS4VSD 55kW-K-0.8-60	**3**
- ZS4VSD, air cooled, oil free positive displacement rotary screw blower featuring: o The first air compressors TÜV-certified as “oil-free” (ISO 8573-1 CLASS 0) o 55kW Premium efficient 460V TEFC drive motor o Rotary screw element for pulsation free air o Integrated Variable Frequency Drive ▪ No need for separate 480 Wiring to controls drive and motor ▪ No need for installation of Communications Wiring ▪ No need to install drive in separate location o Integrated Elektronikon Controller ▪ No need for separate 480 Wiring to controls, drive, and motor ▪ Hardwired & CAN Communication protocol Standard ▪ Pressure control Loops ▪ Integrated Instrumentation • Inlet Filter Differential Pressure Reading • Discharge Temperature & Pressure Readings • Oil Pressure & Temperature Readings o Full noise silencing canopy o Integrated Gear-Box (No Belts) o Integrated air intake filter / silencer o Integrated discharge air relief valve o Integrated discharge silencer o Oil-Circuit Components (Internal to enclosure) o Check Valve (Internal to enclosure) o Base Frame w/ Forklift Slots - Field Installed Accessories o Discharge Expansion Joint - Testing o Standard Factory Mechanical Run Test (Unwitnessed) o Factory ISO 1217 Performance Test Report (Unwitnessed) - Freight - Start-up & Training o (3) Days for installation check & Start-up	

Quote No. 2352557
Revision No. 01
Date: June 7, 2021

Equipment	Qty.
Option 2FB: Rotary Screw Blower – ZS4VSD 45kW-H-1.0-60	**3**
- ZS4VSD, air cooled, oil free positive displacement rotary screw blower featuring: o The first air compressors TÜV-certified as “oil-free” (ISO 8573-1 CLASS 0) o 45kW Premium efficient 460V TEFC drive motor o Rotary screw element for pulsation free air o Integrated Variable Frequency Drive ▪ No need for separate 480 Wiring to controls drive and motor ▪ No need for installation of Communications Wiring ▪ No need to install drive in separate location o Integrated Elektronikon Controller ▪ No need for separate 480 Wiring to controls, drive, and motor ▪ Hardwired & CAN Communication protocol Standard ▪ Pressure control Loops ▪ Integrated Instrumentation • Inlet Filter Differential Pressure Reading • Discharge Temperature & Pressure Readings • Oil Pressure & Temperature Readings o Full noise silencing canopy o Integrated Gear-Box (No Belts) o Integrated air intake filter / silencer o Integrated discharge air relief valve o Integrated discharge silencer o Oil-Circuit Components (Internal to enclosure) o Check Valve (Internal to enclosure) o Base Frame w/ Forklift Slots - Field Installed Accessories o Discharge Expansion Joint - Testing o Standard Factory Mechanical Run Test (Unwitnessed) o Factory ISO 1217 Performance Test Report (Unwitnessed) - Freight - Start-up & Training o (3) Days for installation check & Start-up	

Quote No. 2352557
Revision No. 01
Date: June 7, 2021

Equipment	Qty.
Option 2CB 1+1: Rotary Screw Blower – ZS4VSD 37kW-F-1.0-60	**2**
- ZS4VSD, air cooled, oil free positive displacement rotary screw blower featuring: o The first air compressors TÜV-certified as “oil-free” (ISO 8573-1 CLASS 0) o 37kW Premium efficient 460V TEFC drive motor o Rotary screw element for pulsation free air o Integrated Variable Frequency Drive ▪ No need for separate 480 Wiring to controls drive and motor ▪ No need for installation of Communications Wiring ▪ No need to install drive in separate location o Integrated Elektronikon Controller ▪ No need for separate 480 Wiring to controls, drive, and motor ▪ Hardwired & CAN Communication protocol Standard ▪ Pressure control Loops ▪ Integrated Instrumentation • Inlet Filter Differential Pressure Reading • Discharge Temperature & Pressure Readings • Oil Pressure & Temperature Readings o Full noise silencing canopy o Integrated Gear-Box (No Belts) o Integrated air intake filter / silencer o Integrated discharge air relief valve o Integrated discharge silencer o Oil-Circuit Components (Internal to enclosure) o Check Valve (Internal to enclosure) o Base Frame w/ Forklift Slots - Field Installed Accessories o Discharge Expansion Joint - Testing o Standard Factory Mechanical Run Test (Unwitnessed) o Factory ISO 1217 Performance Test Report (Unwitnessed) - Freight - Start-up & Training o (2) Days for installation check & Start-up	

Quote No. 2352557
Revision No. 01
Date: June 7, 2021

Equipment	Qty.
Option 2CB 2+1: Rotary Screw Blower – ZS26VCA 26kW-H-60	**3**

- ZS26VCA, air cooled, oil free positive displacement rotary screw blower featuring:
  - The first air compressors TÜV-certified as “oil-free” (ISO 8573-1 CLASS 0)
  - 26kW Premium efficient 460V TEFC drive motor
  - Rotary screw element for pulsation free air
  - Integrated Variable Frequency Drive
    - No need for separate 480 Wiring to controls drive and motor
    - No need for installation of Communications Wiring
    - No need to install drive in separate location
  - Integrated Elektronikon Controller
    - No need for separate 480 Wiring to controls, drive, and motor
    - Hardwired & CAN Communication protocol Standard
    - Pressure control Loops
    - Integrated Instrumentation
      - Inlet Filter Differential Pressure Reading
      - Discharge Temperature & Pressure Readings
      - Oil Pressure & Temperature Readings
  - Full noise silencing canopy
  - Integrated Gear-Box (No Belts)
  - Integrated air intake filter / silencer
  - Integrated discharge air relief valve
  - Integrated discharge silencer
  - Oil-Circuit Components (Internal to enclosure)
  - Check Valve (Internal to enclosure)
  - Base Frame w/ Forklift Slots
- Field Installed Accessories
  - Discharge Expansion Joint
- Testing
  - Standard Factory Mechanical Run Test (Unwitnessed)
  - Factory ISO 1217 Performance Test Report (Unwitnessed)
- Freight
- Start-up & Training
  - (3) Days for installation check & Start-up

Quote No. 2352557
Revision No. 01
Date: June 7, 2021

Equipment	Qty.
Option 3: Rotary Screw Blower – ZS5VSD 75kW-H-1.0-60	**3**
- ZS5VSD, air cooled, oil free positive displacement rotary screw blower featuring: o The first air compressors TÜV-certified as "oil-free" (ISO 8573-1 CLASS 0) o 55kW Super Premium efficient 460V Totally Enclosed Oil Cooled drive motor o Rotary screw element for pulsation free air o Integrated Variable Frequency Drive ▪ No need for separate 480 Wiring to controls drive and motor ▪ No need for installation of Communications Wiring ▪ No need to install drive in separate location o Integrated Elektronikon Controller ▪ No need for separate 480 Wiring to controls, drive, and motor ▪ Hardwired & CAN Communication protocol Standard ▪ Pressure control Loops ▪ Integrated Instrumentation • Inlet Filter Differential Pressure Reading • Discharge Temperature & Pressure Readings • Oil Pressure & Temperature Readings o Full noise silencing canopy o Integrated Gear-Box (No Belts) o Integrated air intake filter / silencer o Integrated discharge air relief valve o Integrated discharge silencer o Oil-Circuit Components (Internal to enclosure) o Check Valve (Internal to enclosure) o Base Frame w/ Forklift Slots - Field Installed Accessories o Discharge Expansion Joint - Testing o Standard Factory Mechanical Run Test (Unwitnessed) o Factory ISO 1217 Performance Test Report (Unwitnessed) - Freight - Start-up & Training o (3) Days for installation check & Start-up	

Clarifications:

General:

1. Installation, piping, elbows, spool pieces, piping hardware, piping gaskets, anchor bolts, housekeeping pads, and wiring to be provided by others.

Quote No. 2352557
Revision No. 01
Date: June 7, 2021

Lloyd's Register

Current issue date: 2 September 2020
Expiry date: 31 December 2022
Certificate identity number: 10302554

Original approval(s):
ISO 14001 - 1 January 2005
ISO 45001 - 2 September 2020
ISO 9001 - 9 December 2002

Certificate of Approval

This is to certify that the Management System of:

Atlas Copco Airpower
Oil-free Air

Boomsesteenweg 957, 2610 Wilrijk, Belgium

has been approved by Lloyd's Register to the following standards:

ISO 14001:2015, ISO 45001:2018, ISO 9001:2015

Approval number(s): ISO 14001 – 0019527-746, ISO 45001 – 0019525-174, ISO 9001 – 00014256-291

This certificate forms part of the approval identified by approval number: 0019527/ 0019525/ 0019526

The scope of this approval is applicable to:

ISO 14001:2015
Marketing, design, sale, manufacturing, installation and service of compressors, air treatment equipment, generator sets and related products and services.
ISO 45001:2018
Marketing, design, sale, manufacturing, installation and service of compressors, air treatment equipment, generator sets and related products and services.
ISO 9001:2015
Marketing, design, sale, manufacturing, installation and service of compressors, air treatment equipment, generator sets and related products and services.

Paul Graaf

Area Operations Manager North Europe

Issued by: Lloyd's Register EMEA

for and on behalf of: Lloyd's Register Quality Assurance Limited

UKAS MANAGEMENT SYSTEMS
001

Lloyd's Register Group Limited, its affiliates and subsidiaries, including Lloyd's Register Quality Assurance Limited (LRQA), and their respective officers, employees or agents are, individually and collectively, referred to in this clause as 'Lloyd's Register'. Lloyd's Register assumes no responsibility and shall not be liable to any person for any loss, damage or expense caused by reliance on the information or advice in this document or howsoever provided, unless that person has signed a contract with the relevant Lloyd's Register entity for the provision of this information or advice and in that case any responsibility or liability is exclusively on the terms and conditions set out in that contract.
Issued by: Lloyd's Register EMEA, Jan Van Gentstraat 7 (bus 202) 2000 Antwerp Belgium for and on behalf of: Lloyd's Register Quality Assurance Limited, 1 Trinity Park, Bickenhill Lane, Birmingham B37 7ES, United Kingdom

Quote No. 2352557
Revision No. 01
Date: June 7, 2021

Terms and Conditions of Sale

GENERAL – Unless otherwise expressly agreed in writing by a duly authorized representative of Atlas Copco these terms and conditions supersede all other communications and agreements and notwithstanding any conflicting or different terms and conditions in any order or acceptance of Purchaser, all sales and shipments shall exclusively be governed by these terms and conditions. When used herein "affiliates" shall mean Atlas Copco AB and its wholly-owned subsidiaries. Section headings are for purposes of convenience only. "Products" as used herein shall include products, parts and accessories furnished Purchaser by Atlas Copco. Orders shall be subject to acceptance at Atlas Copco Compressors LLC's principal corporate offices in Rock Hill, South Carolina.

DELIVERY – Unless otherwise agreed in writing, Products manufactured, assembled or warehoused in the continental United States are delivered F.O.B. shipping point, and Products shipped from outside the continental United States are delivered F.O.B. point of entry. Where the scheduled delivery of Products is delayed by Purchaser or by reason of any of the contingencies referred to in Section 5. Atlas Copco may deliver such Products by moving it to storage for the account of and at the risk of Purchaser. Shipping dates are approximate and are based upon prompt receipt of all necessary information and approvals from Purchaser. Atlas Copco reserves the right to make delivery installments.

SECURITY AND RISK OF LOSS - Upon request from Atlas Copco, Purchaser agrees to execute a security agreement covering the Products sold or other assets and to perform all acts which may be necessary to perfect and assure a security position of Atlas Copco. Notwithstanding any agreement with respect to delivery terms or payment of transportation charges, the risk of loss or damage shall pass to Purchaser and delivery shall be deemed to be complete upon delivery to a private or common carrier or upon moving into storage, whichever occurs first, at the point of shipment for Products assembled, manufactured or warehoused in the continental United States or at the point of entry for Products shipped from outside the continental United States.

PAYMENT – If Purchaser fails to pay any invoice when due, Atlas Copco may defer deliveries under this or any other contract with Purchaser, except upon receipt of satisfactory security for or cash in payment of any such invoice.

A service charge of the lesser of 1% per month or the highest rate permitted by applicable law shall be charged on all overdue accounts. Failure on the part of Purchaser to pay invoices when due shall, at the option of Atlas Copco, constitute a default in addition to all other remedies Atlas Copco may have under these conditions of sale or applicable law. If, in the judgment of Atlas Copco, the financial condition of Purchaser at any time prior to delivery does not justify the terms of payment specified. Atlas Copco may require payment in advance or cancel any outstanding order, whereupon Atlas Copco shall be entitled to receive reasonable cancellation charges. If delivery is delayed by Purchaser, payment shall become due on the date Atlas Copco is prepared to make delivery. Should manufacture be delayed by Purchaser, pro rata payments shall become due if and to the extent required at Atlas Copco by its contracts with the manufacturer. All installment deliveries shall be separately invoiced and paid for without regard to subsequent deliveries. Delays in delivery or non-conformities in any installment shall not relieve Purchaser of its obligations to accept any pay for remaining installments.

FORCE MAJEURE – Atlas Copco shall not be liable for loss, damage, detention, or delay, nor be deemed to be in default from causes beyond its reasonable control including but not limited to acts of God, fire, storm, strike or other concerted action of workmen, act or omission of any governmental authority or of Purchaser, compliance with import or export regulations, insurrection or riot, embargo, quarantine, epidemic, pandemic, delays or shortages in transportation, or inability to obtain necessary engineering talent, labor, materials, or manufacturing facilities from usual sources. In the event of delay due to any such cause, the date of delivery will be postponed by such length of time as may be reasonably necessary to make up for such delay.

NEW PRODUCT WARRANTY – Atlas Copco warrants to the Purchaser that all stationary compressors, portable compressors, compressed air dyers, Atlas Copco-designed compressor parts and other Products manufactured by Atlas Copco and affiliates shall be free of defects in design, material and workmanship for a period of fifteen (15) months from date of shipment to Purchaser, or twelve (12) months from date of initial start-up, whichever occurs first, except as set forth below or in the New Products Warranty attached hereto.

Should any failure to conform with this warranty appear prior to or after shipment of the Product to Purchaser during the specified periods under normal and proper use and provided the Product has been properly stored, installed, handled and maintained by the Purchaser, Atlas Copco shall, if given prompt notice by Purchaser, repair or replace, the non-conforming Product or authorize repair or replacement by the Purchaser at Atlas Copco's expense.

Replaced Products become the property of Atlas Copco.

Atlas Copco warrants Products or parts thereof repaired or replaced pursuant to the above warranty under normal and proper use, storage, handling, installation, and maintenance, against defects in design, workmanship and material for a period of thirty (30) days from date of start-up of such repaired or replaced Products or parts thereof or the expiration of the original Product warranty, whichever is longer.

When the nature of the defect is such that it is appropriate in the judgment of Atlas Copco to do so, repairs will be made at the site of the Product. Repair or replacement under applicable warranty shall be made at no charge for replacement parts, F.O.B. Atlas Copco Warehouse, warranty labor, serviceman transportation and living costs, when work is performed during normal working hours (8 a.m. to 4:30 p.m. Monday through Friday, exclusive of holidays). Labor performed at other times will be billed at the overtime rate then prevailing for services of Atlas Copco personnel.

The Atlas Copco warranty does not extend to Products not manufactured by Atlas Copco or affiliates. As to such Products, Purchaser shall be entitled to proceed only upon the terms of that particular manufacturer's warranty. The Atlas Copco warranty does not apply to defects in material provided by Purchaser or to design stipulated by Purchaser.

Used Products, Products not manufactured by Atlas Copco or affiliates and Products excluded from the above warranties are sold AS IS with no representation or warranty, and ALL WARRANTTIES OF QUALITY, WRITTEN, ORAL, OR IMPLIED, other than may be expressly agreed to by Atlas Copco in writing, INCLUDING WITHOUT LIMITATION WARRANTIES OF MERCHANTIABILITY OR FITNESS, ARE HEREBY DISCLAIMED.

Any services performed by Atlas Copco in connection with the sale, installation, servicing or repair of a Product are warranted to be performed in a workmanlike manner. If any nonconformity with this warranty appears within 45 days after the services are performed, the exclusive obligation of Atlas Copco shall be to re-perform the services the services in a conforming manner.

THE FOREGOING WARRANTIES ARE EXCLUSIVE AND IN LIEU OF ALL OTHER WARRANTIES OF QUALITY, WRITTEN, ORAL OR IMPLIED, AND ALL OTHER WARRANTIES, INCLUDING WITHOUT LIMITATION ANY WARRANTY OF MERCHANTABILITY OR FITNESS ARE HEREBY DISCLAIMED. Correction of nonconformities as provided above shall be Purchaser's exclusive remedy and shall constitute fulfillment of all liabilities of Atlas Copco (including any liability for direct, indirect, special, incidental or consequential damage) whether in warranty, strict liability, contract, tort, negligence, or otherwise with respect to the quality of or any defect in Products or associated services delivered or performed hereunder.

Quote No. 2352557
Revision No. 01
Date: June 7, 2021

LIMITATION OF LIABILITY – IN NO EVENT SHALL ATLAS COPCO BE LIABLE FOR SPECIAL, INDIRECT, INCIDENTAL OR CONSEQUENTIAL DAMAGES, however arising, whether in warranty, strict liability, contract, tort, negligence or otherwise, including but not limited to loss of profits or revenue, loss of total or partial use of the Products or facilities or services, downtime cost, or claims of the Purchaser for such or other damages whether on account of Products furnished hereunder or delays in delivery thereof or services performed upon or with respect to such Products. Atlas Copco's liability on any claim whether in warranty, strict liability, contract, tort, negligence or otherwise for any loss or damage arising out of, connected with, or resulting from this contract or the performance or breach thereof, or from the design, manufacture, sale, delivery, resale, repair, replacement, installation, technical direction of installation, inspection, servicing, operation or use of any Product covered by or furnished under this contract shall in no case (except as provided in the section entitled "Patent Indemnity") exceed the purchase price allocable to the Product or Part thereof which gives rise to the claim.

All causes of action against Atlas Copco arising out of or relating to this contract or the performance hereof shall expire unless brought within on year of time of accrual thereof.

PRICES – Prices to the Purchaser shall be the Atlas Copco list price in effect at time of order. Atlas Copco may, upon thirty (30) days prior written notice to Purchaser, change prices, or other terms of sale affecting the Products, by issuing new price schedules, bulletins or other notices.

This contract applies to new Products only. Purchases of used equipment shall be on terms to be agreed upon at time of sale to Purchaser.

This price does not include any Federal, state or local property, license, privilege, sales, service use, excise, value added, gross receipts, or other like taxes which may now or hereafter by applicable to, measured by or imposed upon or with respect to this transaction, the property, its purchase, sale, replacement, value, or use, or any services performed in connection therewith. Purchaser agrees to pay or reimburse Atlas Copco, its subcontractors or suppliers any such taxes, which Atlas Copco, its subcontractors or suppliers are required to pay or collect or which are required to be withheld by Purchaser.

The price shall also be subject to adjustment in accordance with the published Price Adjustment Clauses, which price adjustment information shall supersede the terms of this Section 8, where inconsistent herewith.

INFORMATION FURNISHED PURCHASER – Any design, manufacturing drawings or other information or materials submitted to the Purchaser and not intended for dissemination by Purchaser remain the exclusive property of Atlas Copco and may not, without its consent, be copied or communicated to a third party.

PATENT INDEMNITY – For purposes only of this Section 10, where used, the designation "Atlas Copco" shall be deemed to mean Atlas Copco North America Inc. and its subsidiaries.

Atlas Copco shall at its own expense defend any suits or proceedings brought against purchaser insofar as based on an allegation that Products furnished hereunder constitute an infringement of any claim of any patent of the United States of America, other than a claim covering a process performed by said Products or a product produced by said Product, provided that such Products are manufactured by Atlas Copco, are not supplied according to Purchaser's detailed design, are used as sold by Atlas Copco. Purchaser shall have made all payments then due hereunder, and Atlas Copco is notified promptly in writing and given authority, information and assistance for the defense of said suite or proceeding; and Atlas Copco shall pay all damages and costs awarded in any suit or proceeding so defended, provided that his indemnity shall not extend to any infringement based upon the combination of said Products or any portion thereof with other Products or things not furnished hereunder unless Atlas Copco is a contributory infringer. Atlas Copco shall not be responsible for any settlement of such suit or proceeding made without its written consent. If in any suit or proceeding defended hereunder any Product is held to constitute infringement, and its use is enjoined, Atlas Copco shall, at its option and its own expense, either replace said Products with non-infringing Products; or modify them so that they become non-infringing; or remove them and refund the purchase price and the transportation costs thereof. THE FOREGOING STATES THE ENTIRE LIABILITY OF ATLAS COPCO AND AFFILIATES WITH RESPECT TO PATENT INFRINGEMENT.

To the extent that said Products or any portion thereof are supplied according to Purchaser's detailed design or instructions, or modified by Purchaser, or combined by Purchaser with equipment or things not furnished hereunder, except to the extent that Atlas Copco is a contributory infringer, or are used by Purchaser to perform a process, or produce a product, and by reason of said design, instructions, modification, combination, performance or production, a suit or proceeding is brought against Atlas Copco, Purchaser agrees to indemnify Atlas Copco in the manner and to the extent Atlas Copco indemnities Purchaser in this Section 10 insofar as the terms hereof are appropriate.

ASSIGNMENT – Any assignment of this contract or any rights hereunder, without prior written consent of Atlas Copco by a duly authorized representative thereof shall be void.

TERMINATION – Any order or contract may be cancelled by Purchaser only upon payment of reasonable charges (including an allowance for profit) based upon costs and expenses incurred, and commitments made by Atlas Copco.

PARTIAL INVALIDITY – If any provision herein or portion thereof shall for any reason be held invalid or unenforceable, such invalidity or enforceability shall not affect any other provision or portion thereof, but these conditions shall be construed as if such invalid or unenforceable provision or portion thereof had never been contained therein.

REMEDIES – The remedies expressly provided for in these conditions shall be in addition to any other remedies, which Atlas Copco may have under the Uniform Commercial Code or other applicable law.

SMARTLINK: The equipment may include a data monitoring service called SMARTLINK. The data received by Atlas Copco may be used by Atlas Copco and certain third party distributors and contractors for the purpose of increasing overall customer service. Atlas Copco will use commercially reasonable efforts to ensure that Purchaser's data is kept confidential. Purchaser acknowledges that the use of the SMARTLINK is provided "as is", that use of the service is entirely at Purchaser's risk, and that Atlas Copco may discontinue the SMARTLINK service at any time. Purchaser may request discontinuance of the SMARTLINK service at any time.

NOTE: Sale of the equipment or services described or referred to herein at the price indicated is expressly conditioned upon the terms and conditions set forth on the front and back of this page. Any confirmatory action by the Purchaser hereunder, or any acceptance of such equipment of services, shall constitute assent to said terms and conditions. Any additional or different terms or conditions set forth in the Purchaser's order or other communications are objected to by Seller and shall not be effective or binding unless assented to in writing by an authorized representative of Seller.

Quote No. 2352557
Revision No. 01
Date: June 7, 2021

PAYMENT TERMS

For orders under $75,000 the payment terms shall be **Net 30 days** from date of shipment.

For orders over $75,000 or with lead times greater than six months the following terms shall apply:

1. **Domestic Shipments (Net 30 terms)**

   A. 20% of order value upon document submittal.
   B. 30% of order value upon start manufacturing.
   C. 45% of order value upon delivery of equipment to site.
   D. 5% of order value, upon equipment commissioning, not to exceed 90 days from delivery to site.

   In those cases where progress payments are required, all work on the order will cease if payment is not received in accordance with the payment schedule.

2. **Payment Retention**

   Payment retention will not be allowed. An irrevocable bank letter of credit will be furnished at Atlas Copco's expense in lieu of retention.

3. **Credit Approval**

   ALL TERMS ARE SUBJECT TO APPROVAL by Atlas Copco Compressors LLC and may result in a required change to the standard terms specified above.

CANCELLATION SCHEDULE
The following cancellation schedule shall apply to orders once released to manufacture.

Definitions:
Standard Stocked Equipment - equipment as shown in the current catalog and available for shipment from the US Distribution Center.
Standard Non-Stocked Equipment - equipment as shown in the current catalog but not currently stocked at the US Distribution Center.
Engineered Equipment - equipment requiring customized features not shown in the current catalog.

Orders for Standard Non-Stocked Equipment
A) After production has started:
* 40% of equipment price

B) After production has been completed:
* 60% of equipment price

Orders for Engineered Equipment
A) After production has started
* 40% of the base machine price
* 40% of optional equipment of purchased materials will be charged

B) After production has completed
* 60% of the base machine price
* 100% of optional equipment

Performance at Operating Point

Atlas Copco

Date Monday, June 7, 2021

Range

ZS4VSD_A1

		ZS 4 VSD 55kW K-0.8-60 without aftercooler	ZS 4 VSD 55kW K-0.8-60 without aftercooler	ZS 4 VSD 55kW K-0.8-60 without aftercooler
		Operating point	**Min Flow at Pressure**	**Max Flow at Pressure**
Customer Conditions				
Process gas		AIR	AIR	AIR
Cooling medium		Air	Air	Air
Network frequency				
Barometric pressure	ft asl	100	100	100
Inlet temperature	°F	110	110	110
Relative humidity	%	50	50	50
Inlet gas density	kg/m³	1.093	1.093	1.093
Reference Conditions				
Pressure	ft asl	-13.892	-13.892	-13.892
Temperature	°F	68	68	68
Relative humidity	%	36	36	36
Model Performance				
Discharge pressure				
- AfterCheckValve	PSI	10	10	10
Delivered flow	scfm-ASME	1384	357.95	1421.79
Power				
- Shaft	hp	74.74	19.53	77.29
- Package	hp	80.54	22.26	83.05
Specific energy				
- Shaft	J/l	75	76	76
- Package	J/l	81	87	82
Motor speed	rpm	3259	1000	3345
Stage isentropic eff.				
- Shaft	%	74.99	74.22	74.49
- Package	%	69.59	65.12	69.33
Air outlet temperature	°F	224	226	224

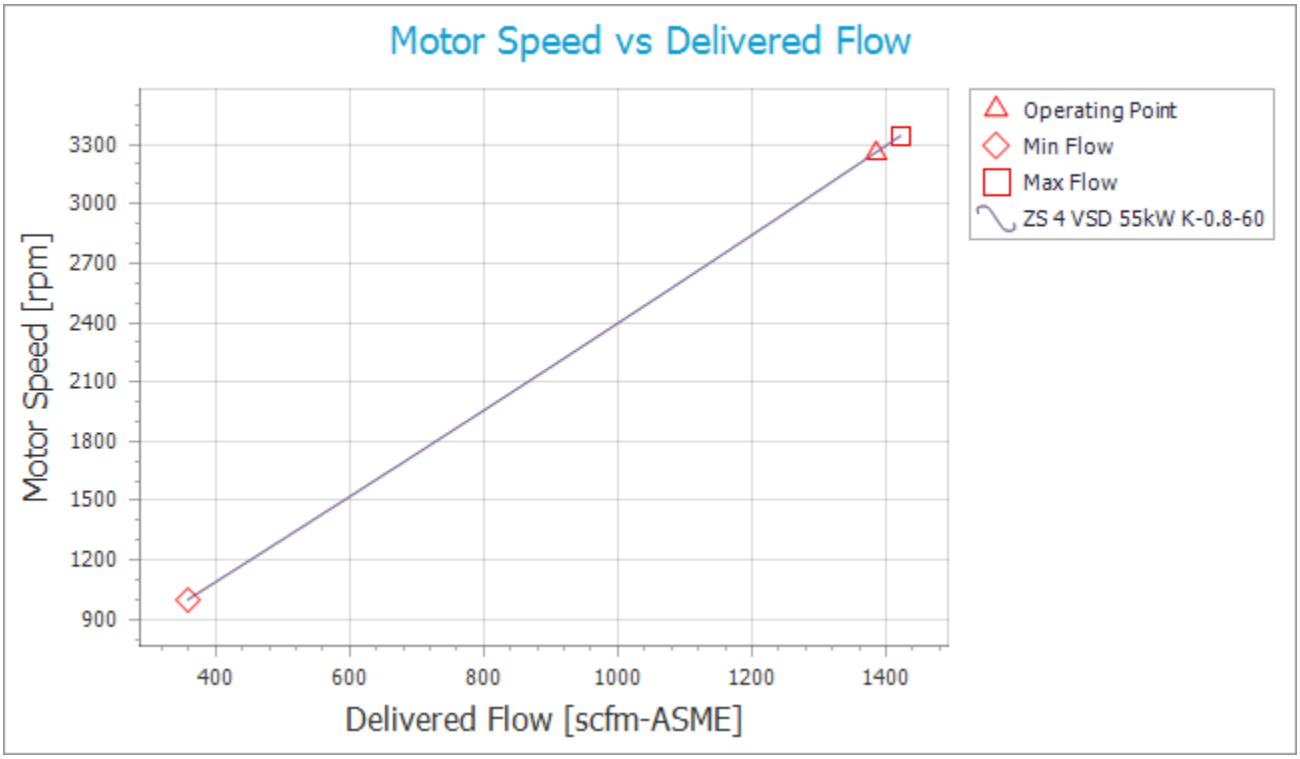
Motor Speed vs Delivered Flow
Motor Speed [rpm]
3300
3000
2700
2400
2100
1800
1500
1200
900
400
600
800
1000
1200
1400
Delivered Flow [scfm-ASME]
Operating Point
Min Flow
Max Flow
ZS 4 VSD 55kW K-0.8-60

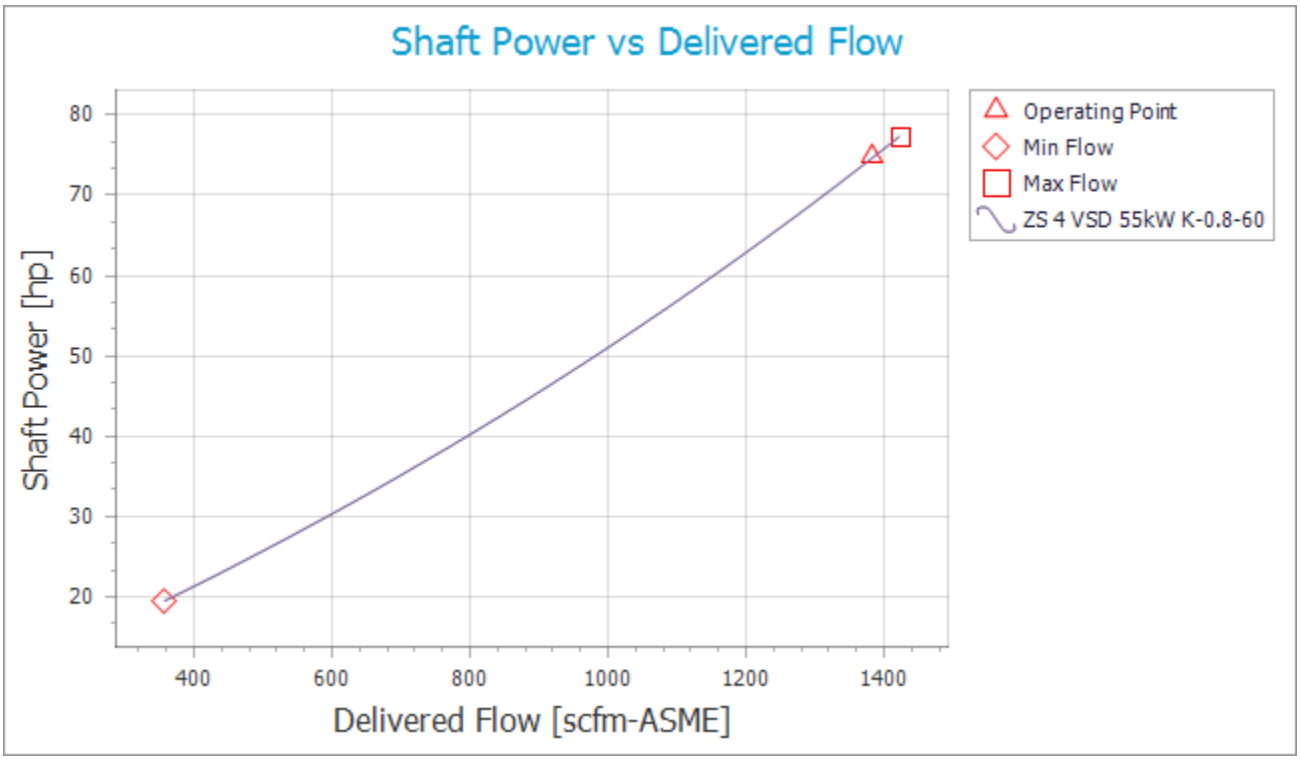
Shaft Power vs Delivered Flow
Shaft Power [hp]
80
70
60
50
40
30
20
400
600
800
1000
1200
1400
Delivered Flow [scfm-ASME]
Operating Point
Min Flow
Max Flow
ZS 4 VSD 55kW K-0.8-60

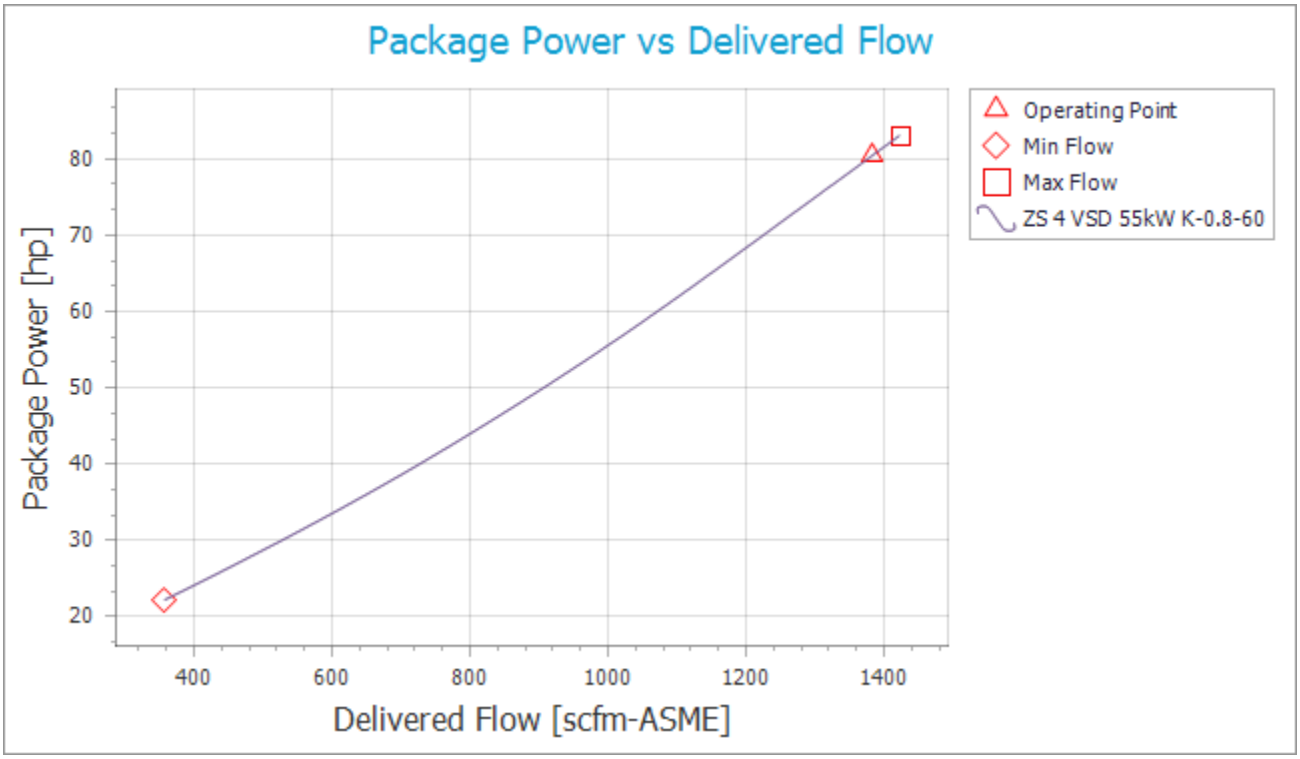
Package Power vs Delivered Flow
Package Power [hp]
80
70
60
50
40
30
20
400
600
800
1000
1200
1400
Delivered Flow [scfm-ASME]
Operating Point
Min Flow
Max Flow
ZS 4 VSD 55kW K-0.8-60

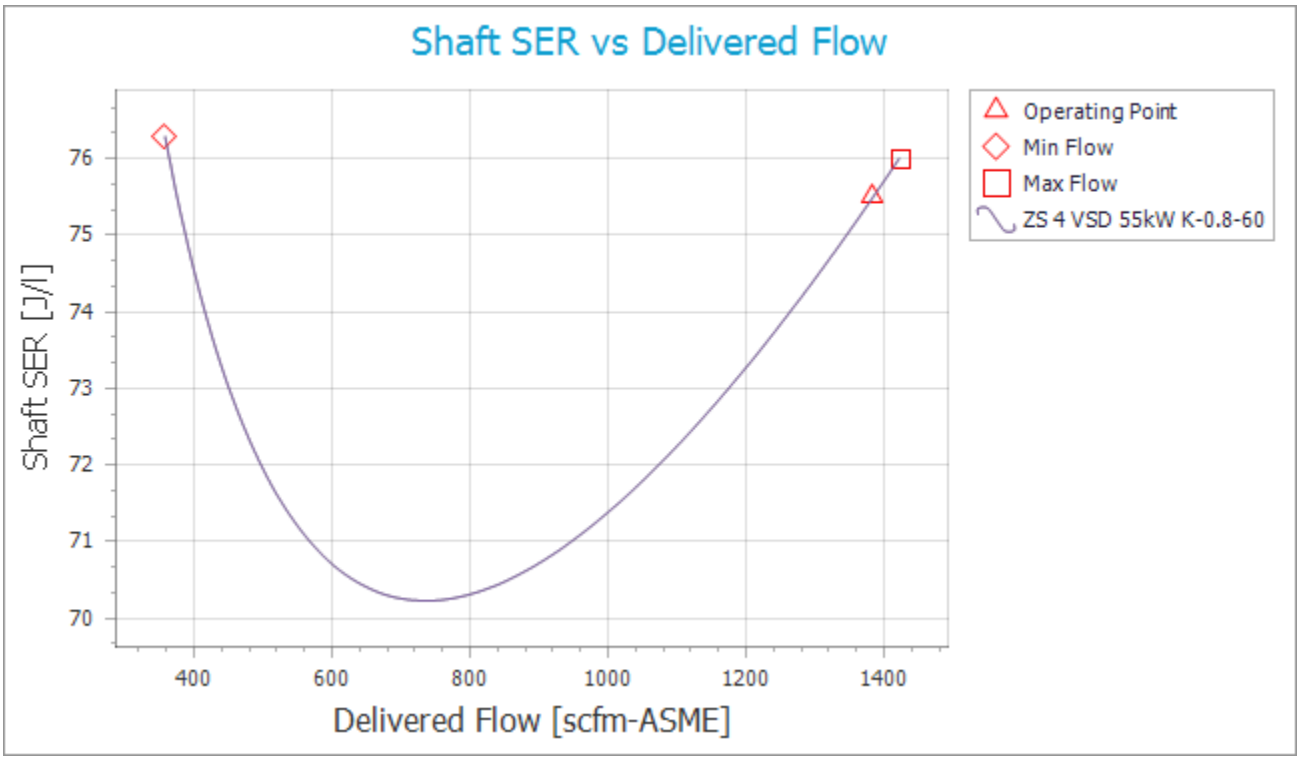
Shaft SER vs Delivered Flow
Shaft SER [J/l]
76
75
74
73
72
71
70
400
600
800
1000
1200
1400
Delivered Flow [scfm-ASME]
Operating Point
Min Flow
Max Flow
ZS 4 VSD 55kW K-0.8-60

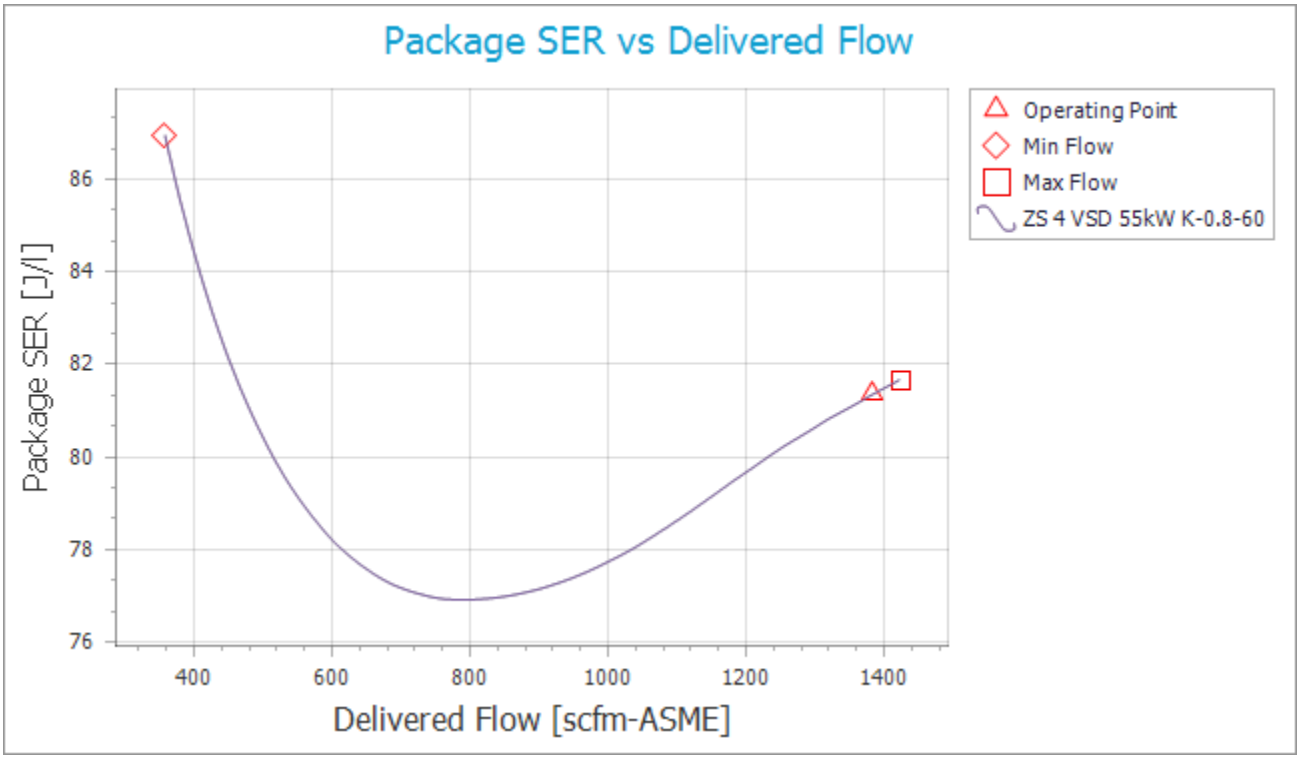
Package SER vs Delivered Flow
Package SER [J/l]
86
84
82
80
78
76
400
600
800
1000
1200
1400
Delivered Flow [scfm-ASME]
Operating Point
Min Flow
Max Flow
ZS 4 VSD 55kW K-0.8-60

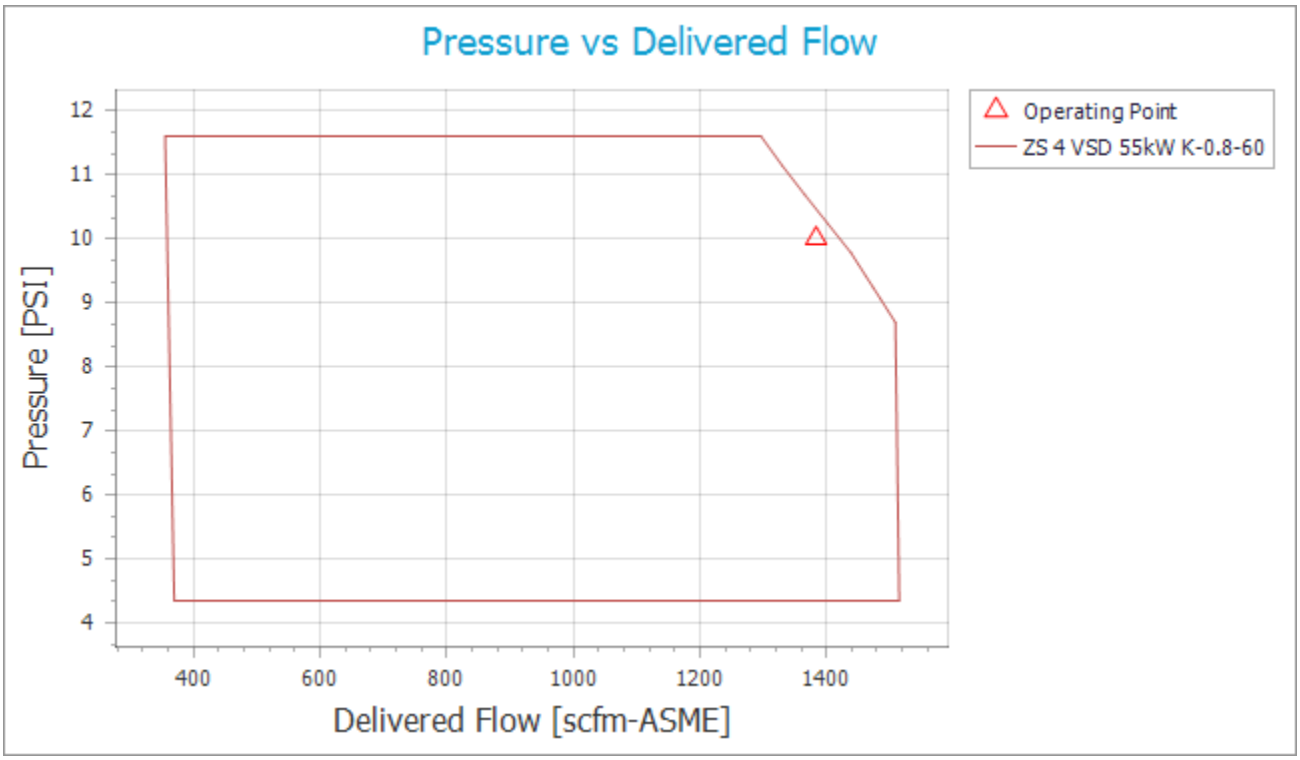
Pressure vs Delivered Flow
Pressure [PSI]
12
11
10
9
8
7
6
5
4
400
600
800
1000
1200
1400
Delivered Flow [scfm-ASME]
Operating Point
ZS 4 VSD 55kW K-0.8-60

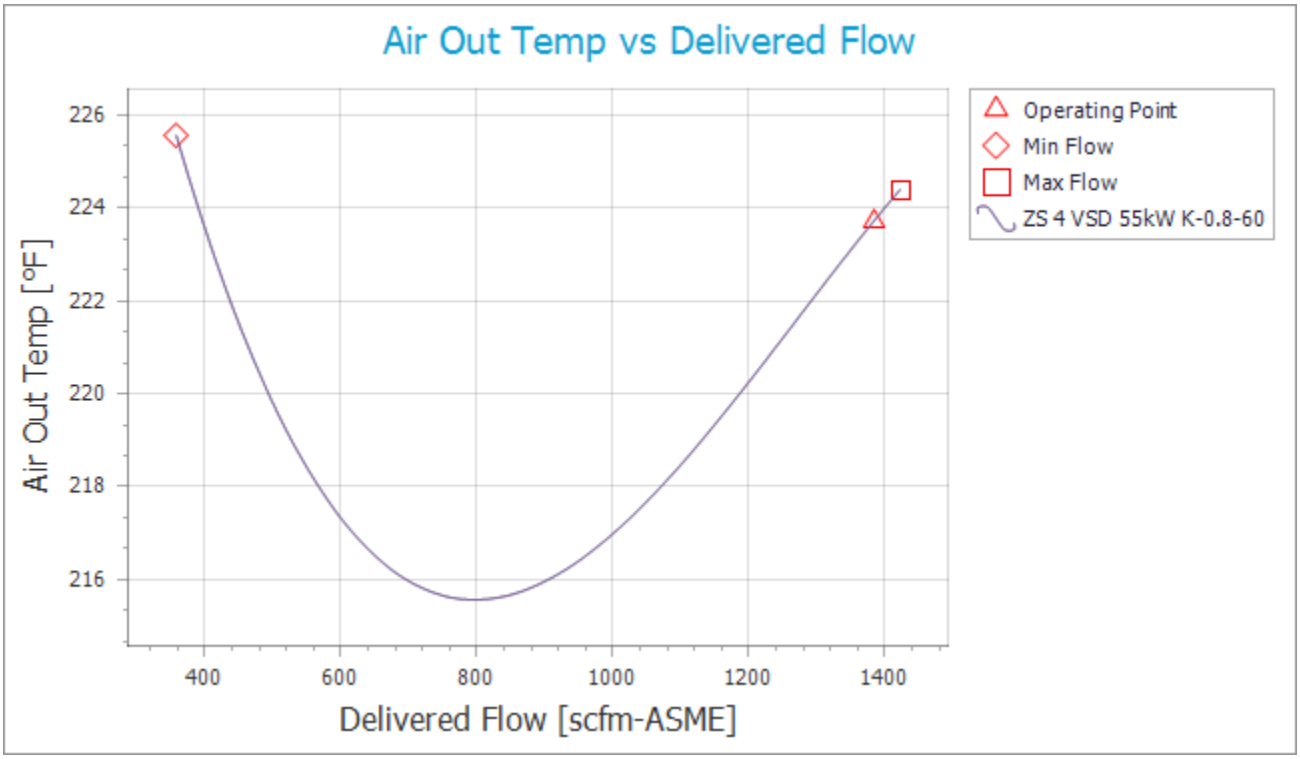
Air Out Temp vs Delivered Flow
Air Out Temp [°F]
226
224
222
220
218
216
400
600
800
1000
1200
1400
Delivered Flow [scfm-ASME]
Operating Point
Min Flow
Max Flow
ZS 4 VSD 55kW K-0.8-60

Technical data: ZS 4 VSD 55kW K-0.8-60

Reference conditions	
Absolute inlet pressure	14.5 psi(a)
Relative humidity	0 %
Air inlet temperature	68 °F
Cooling air inlet temperature	68 °F

Performance data*1	
Motor speed range	
Minimum speed	1000 rpm
Maximum speed	3540 rpm
Maximum working pressure	11.6 psi(g)
Free air delivery (at maximum volume flow rate)	1488 cfm
- Total electrical power input	63.6 kW
- Total specific energy requirements (SER)	4.3 kW/100 cfm
- Discharge temperature	187 °F
Free air delivery (at 75% of volume flow range)	1216 cfm
- Total electrical power input	50.7 kW
- Total specific energy requirements (SER)	4.2 kW/100 cfm
- Discharge temperature	183 °F
Free air delivery (at 50% of volume flow range)	943 cfm
- Total electrical power input	39 kW
- Total specific energy requirements (SER)	4.1 kW/100 cfm
- Discharge temperature	181 °F
Free air delivery (at 25% of volume flow range)	670 cfm
- Total electrical power input	28.5 kW
- Total specific energy requirements (SER)	4.2 kW/100 cfm
- Discharge temperature	184 °F
Free air delivery (at minimum volume flow rate)	398 cfm
- Total electrical power input	19 kW
- Total specific energy requirements (SER)	4.8 kW/100 cfm
- Discharge temperature	194 °F
Effective working pressure	11.6 psi(g)
Free air delivery (at maximum volume flow rate)	1488 cfm
- Total electrical power input	63.6 kW
- Total specific energy requirements (SER)	4.3 kW/100 cfm
- Discharge temperature	187 °F

Free air delivery (at 75% of volume flow range)	1216 cfm
- Total electrical power input	50.7 kW
- Total specific energy requirements (SER)	4.2 kW/100 cfm
- Discharge temperature	183 °F
Free air delivery (at 50% of volume flow range)	943 cfm
- Total electrical power input	39 kW
- Total specific energy requirements (SER)	4.1 kW/100 cfm
- Discharge temperature	181 °F
Free air delivery (at 25% of volume flow range)	670 cfm
- Total electrical power input	28.5 kW
- Total specific energy requirements (SER)	4.2 kW/100 cfm
- Discharge temperature	184 °F
Free air delivery (at minimum volume flow rate)	398 cfm
- Total electrical power input	19 kW
- Total specific energy requirements (SER)	4.8 kW/100 cfm
- Discharge temperature	194 °F
Minimum effective working pressure	4.4 psi(g)
– Free air delivery (at maximum volume flow rate)	1707 cfm
– Total electrical power input	41.1 kW
– Total specific energy requirements (SER)	2.4 kW/100 cfm
– Discharge temperature	126 °F
– Free air delivery (at 75% of volume flow range)	1384 cfm
– Total electrical power input	31 kW
– Total specific energy requirements (SER)	2.2 kW/100 cfm
– Discharge temperature	125 °F
– Free air delivery (at 50% of volume flow range)	1061 cfm
– Total electrical power input	22.2 kW
– Total specific energy requirements (SER)	2.1 kW/100 cfm
– Discharge temperature	120 °F
– Free air delivery (at 25% of volume flow range)	738 cfm
– Total electrical power input	15.1 kW
– Total specific energy requirements (SER)	2 kW/100 cfm
– Discharge temperature	115 °F
– Free air delivery (at minimum volume flow rate)	414 cfm
– Total electrical power input	9.1 kW
– Total specific energy requirements (SER)	2.2 kW/100 cfm
– Discharge temperature	114 °F

Unit data*3	
Mean sound pressure level*2	78 dB(A)
Cooling air flow	2458 cfm
Oil capacity	5.3 gal(US)
Length	80 in

Width	49.21 in
Height	68.5 in
Net weight	3726 lb

Limitations	
Maximum effective working pressure	11.6 psi(g)
Minimum effective working pressure	4.4 psi(g)
Maximum ambient temperature	104 °F
Minimum ambient temperature	32 °F
Maximum cooling air temperature	104 °F
Minimum cooling air temperature	-4 °F
Maximum altitude (above sea level)	3280.84 ft

Installation connections	
Compressed air outlet	8"-150lbs
Electrical cable entry size	Ø64 - (x2) at side panel / Ø64 - (x2) at roof panel

Main drive motor	
Motor manufacturer	WEG
Motor nominal power	74 hp
Motor service factor	1.15
Motor efficiency class	IE3 -IEC 60034-30
Motor full load efficiency	94.2 %
Motor protection class	IP55
Motor synchronous speed	3540 rpm
Insulation class	H
Power factor	0.87
Motor winding protection	3 x PTC thermistors + 3 x PT1000
Motor bearing protection	2 x PT1000

Frequency Converter	
Converter manufacturer	Atlas Copco (NEOS)

Electrical data	
Supply voltage	440 - 460 V
Supply frequency	60 Hz
Package current*[4]	95.1 - 91 A

Main feeder circuit protection

(Customer's installation) *5	
Main fuse type	class T
Maximum main fuse size	3x160 A
Main control panel short-circuit current rating	65 kA

Approvals	
Electrical approval	CSA-UL
Pressure vessel approval	ASME (U Stamp)

Notes

*1 The FAD figures quoted correspond to 'Actual Volume Flow Rate' in accordance with ISO 1217 Ed. 4 (2009), guaranteed with a tolerance of +/-5 % for FAD < 250 l/s (530 cfm) or +/-4 % for FAD > 250 l/s (530 cfm).
FAD (Free Air Delivery) is measured at the above stated reference conditions.
The FAD figures are valid for supply voltage 400V (for 50Hz-units) or 460V (for 60Hz-units).
Data may differ 0,5% maximum at other supply voltages < 1kV and 3,5% maximum at supply voltages > 1kV

*1 The SER figures quoted are in accordance with ISO 1217 Ed. 4 (2009),
guaranteed with a tolerance of +/-6 % for FAD < 250 l/s (530 cfm) or +/-5 % for FAD > 250 l/s (530 cfm).
The SER figures are valid for supply voltage 400V (for 50Hz-units) or 460V (for 60Hz-units).
Data may differ 0,5% maximum at other supply voltages < 1kV and 3,5% maximum at supply voltages > 1kV

*2 A-weighted emission sound pressure level at the work station (LpWSAd).
Measured according to ISO 2151: 2008 using ISO 9614-2 (sound intensity scanning method).
The added correction factor (+/- 3 dB(A)) is the total uncertainty value (KpAd) conform with the test code.
For air cooled machines, sound pressure levels are stated with ducting of outlet cooling air according the installation proposal

*3 Unit data is valid at reference conditions

*4 Package current is the current a compressor uses
- at reference ambient conditions
- at 100 % load
- at max pressure
- at nominal voltage
- right before service interval (including fouled filters, etc).- right before service interval (including fouled filters, etc).

*5 The pre-described fuses OR circuit breaker are maximum main fuses or circuit breaker to protect the installed compressor electrical panel.
Cable and fuse or circuit breaker selection will depend on customer's installation.
Fuses or circuit breaker of the same type/class are mandatory. Not installing these fuses or circuit breaker will void warranty in case of an electrical failure.
Installing smaller fuses might lead to smaller supply cables. If Main circuit breaker shown as NA (not applicable), only fuses are allowed.

The information in this document is subject to change without prior notice.

Publication date:May 30, 2021

ZS 4 VSD

ATLAS COPCO OIL-FREE ROTARY SCREW AIR BLOWER, AIRCOOLED, VARIABLE SPEED, ELECTRICAL CABINET INCLUDING VSD INVERTER



The Atlas Copco ZS 4 VSD positive displacement screw blower is probably the most innovative and advanced screw blower available in the market, providing unrivalled energy savings and maximum reliability in the smallest footprint.

To protect your process and end products, it features the unique 100% oil-free Class Zero Certified screw element.

Ultimate Efficiency, Reliability and Air Quality

The ZS 4 screw blower is built around energy efficiency in order to come to the lowest TCO (Total Cost of Ownership) over the lifetime of the blower.

TCO consists of all costs to purchase, install, operate and maintain the blower over its full lifetime; far the largest part of this TCO is the operating cost, or the spending to energy/electricity consumption!

Looking on a larger scale, e.g. at the total costs of a WWTP (Waste Water Treatment Plant), figures are available proving that 60% of a the full WWTP energy consumption is related to the aeration system (the blowers); selecting an energy efficient blower pays off!

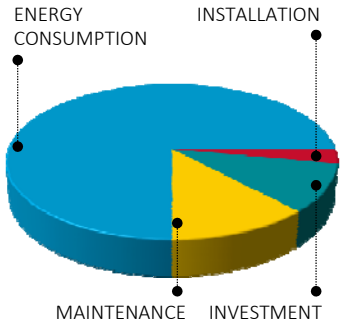

Highlights

Efficient, clean and reliable compression	
	True oil-free compression technology (Class 0 certified).
	Optimized inlet- and outlet port and rotor, coated rotors for minimal clearance
IE3 & Nema premium efficiency motor	
Forced cooling and lubrication of bearings and gears	
	Integrated oil pump
	Cool oil injection to bearings and gears
Gearbox transmission: most efficient, minimum maintenance	
Plug & Play – total solution	
	Neos VSD inverter, EMC- and RFI filter, TT/TN net
	Sensors for air & oil pressure & temperature included
	Advanced touch screen monitoring system
	Connectivity potential to system process controller and or Optimizer 4.0
Installation flexibility	
	Most compact screwblower in the market
	Sound attenuating canopy
	Side-by-Side installation as standard

Product features – customer benefits!

State-of-the-art oil-free screw element



Built around the proven Atlas Copco oil-free patented asymmetrical rotor profile, the ZS compression element comprises of most energy efficient geometry (4 lobes and 6 flutes).

By using internal compression to reduce the volume during compression, the intermeshing Teflon coated rotors provide extremely high energy efficiency compared to the traditional lobe type blower.

Efficiency



The Atlas Copco screw blower element is **30% to 40% more efficient** than a traditional lobe blower which results in less energy cost.

This screw blower element is built around efficient internal compression; for that the inlet and outlet ports are optimized, coated rotors enable a minimum operational clearance setting which is managed by a carefully selected synchronization gear set.



High efficiency bearings run smoothly with minimal mechanical losses.

Reliability

The integrated oil pump and oil cooler feed cool oil to bearings and gears; oil nozzles ensure the right amount of oil.

Lower operating temperature results in longer component life and higher maximum ambient temperatures that can be allowed.



Higher pressure capability allows for higher operating pressure, pressure spikes and dirty filters.

Air Quality

Oil-free compression element (ISO 8573 Class 0 certified) for guaranteed air quality.

Gearbox transmission



Power transmission from motor to blower-element is done with a gearbox. A flexible coupling helps to limit torque peaks.

Gearbox transmission is the most reliable and energy efficient solution:

Efficiency

Typically a gearbox is a 5% more energy efficient transmission compared to belt-pulley system.

No belt slip affecting the blower performance, ambient oil mist and dust increase belt slip further.

Unlike for belt-pulley, no risk for misalignment and increased transmission losses.

Reliability



Forced cooled oil flow ensures long lifetime of transmission elements

No specific preventive maintenance required besides the oil and filter change, less down time.

Smart bearing- and gear sizing: radial bearing forces increase lifetime and improve efficiency, helix gears reduce bearing thrust loads, and hence the element lifetime.

The drive motor is TEFC IP55 rated, ready for use dusty conditions.

High efficiency air inlet filter

Atlas Copco ZS blowers include a filter housing that will pre-separate heavy particles through centrifugal action, and subsequently a paper cartridge type air intake filter removing 99.5 % of all dust particles greater than 1 micron in size. (Filter specification is SAE fine 99.5 %). This ensures:

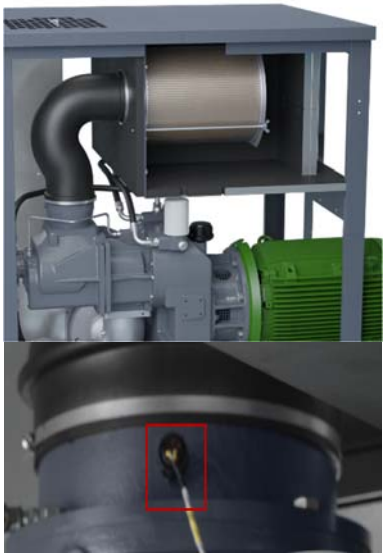

Reliability

Protecting the compressor element from dust and particles, to ensure longer lifetime for element.

Protecting the customer air net from dust and particles, to ensure clean and trouble-free operation.

Efficiency

Low pressure drop over the filter for less energy consumption.

A pressure transmitter records pressure drop over the inlet filter, the blower controller posts a warning if the filter is clogged. A 50mbar pressure drop due to a clogged filter leads to 5-10% energy waste!

Forced, cooled oil lubrication circuit

The oil circuit includes an integrated oil pump, cooler, oil filter and sump ensuring that clean and cooled oil of not more than 70°C is fed to the gears and bearings of element and gearbox.



Reliability

To protect, cool and lubricate the element and gears' bearings and gears even in the harshest operating conditions, resulting in long element lifetime and infrequent preventive maintenance



Efficiency

Forced oil lubrication allows for high element speed, so high discharge flow for very limited sized blower packages.

Start-up valve

This valve has three functions:

1. start-up valve: start without back-pressure, limit motor starting torque.
2. pressure control valve: with help of a controlled solenoid valve, blow-off valve is opened when the set-pressure is reached to stop the air supply while not having to stop the motor.
3. safety valve: mechanical protection: the valve will be pushed open mechanically when the pressure exceeds the maximum allowed point.



Reliability

Protecting the blower and the whole air network from over pressure.

Efficiency

Correctly rated motors have better efficiency resulting in less energy consumption.

Control and regulation system

The Elektronikon® Mk5 Touch controller and regulation system builds on years of experience and knowledge. The unit controller is specially designed to maximize the performance of your blower under a variety of conditions.



The controller has built-in remote control and notification functions provided as standard, including a simple to use integrated webpage.

Reliability

Precise and continuous monitoring of all instrumentation parameters ensures that the compressor is always protected.

SMARTLINK integration

SMARTLINK enables online monitoring of the unit, tracking of warnings and/or alarms, sensor trending, maintenance scheduling etc. With SMARTLINK, we adopt to new Industry 4.0 connectivity requirement.



Reliability

Allows read-out of the parameters of the machine on a user login-protected web site.

Electrical cubicle with integrated VSD starter

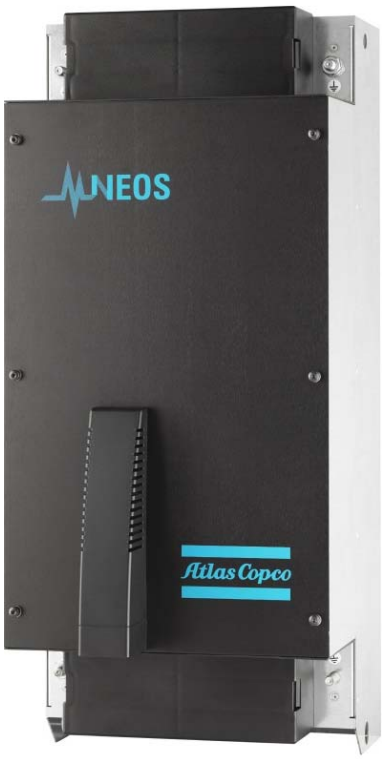

The Neos inverter is the best-in-class integrated VSD inverter; it is an in-house design, dedicated for blowers and compressors. It is a complete solution with improved control capacity and with the highest guarantee on spare parts availability.

Neos has IP5X protection degree hence can operate trouble-free in the harshest conditions.

With the integrated VSD, we can offer either Pressure Control mode (adapt speed to reach pressure setpoint) or Remote Speed Control (follow a 4-20mA signal).

Reliability

Proven design integrating all required electrical components for optimum reliability.

Efficiency

VSD inverter designed specifically to operate blowers and compressors (with specific constant-torque application)

Reduced installation and start-up cost thanks to complete integration.

Noise enclosure with internal baffling



Completely enclosed canopy with silenced doors and air inlet baffling.

Ventilation gratings are at the back panel and on the roof top to enable ducting of intake air or ventilation outlet.

Canopy design enables installation Side-by-Side, periodic maintenance can be done from front and back.

Reliability



Intelligent internal baffling design coupled with totally enclosed canopy providing reduced sound levels for an improved working environment.

Efficiency

Reduced installation costs as there is no need for noise insulated rooms and doors.

Working principle

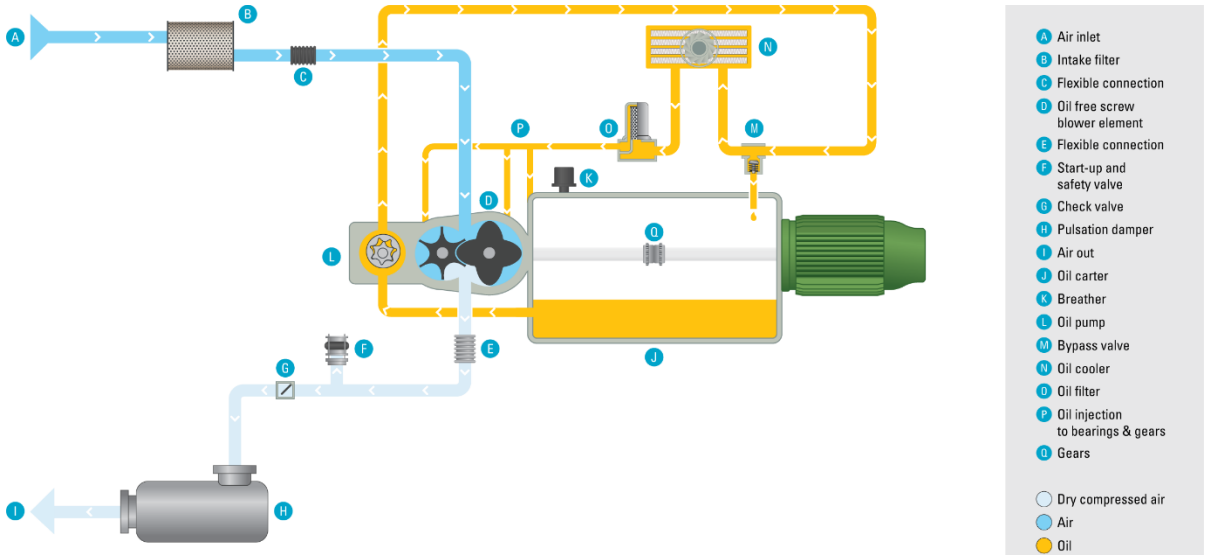

The air system

Air is filtered prior to entering the screwblower element, where it is internally compressed.

At start-up, the blow-off valve is 'open' for smooth unit start-up. As soon as the blow-off valve is closed, air pressure increases further, resulting in enough force to push the check-valve open.

The discharge silencer reduces the pressure pulsation levels to the minimum.

The oil system

Oil suction from the carter, integrated in the gearbox.

The bypass valve decides exactly what oil flow is required for bearing- and gear cooling and lubrication.

That oil first is pumped through the oil cooler, then the cool oil is fine-filtered.

Filtered cool oil is distributed to individually tuned oil nozzles per bearing and/or gear in screwblower element and gearbox.

Internal drains recover all oil in the carter (in the gearbox).

The cooling system

One cooling fan pulls fresh air from the unit back side. That fresh air is pushed through the oil cooler, taking away the heat of the oil.

In parallel, the motor cooling fan also pulls fresh air from the unit back side. The motor fan-cowl ensures that air flowing over the motor cooling fins.

The cubicle is cooled with fresh air taken-in through filters in the front door.

The hot canopy air (oil cooling heat, motor cooling heat and cubicle heat) can leave the canopy through a roof-top grating. A noise attenuating baffle is installed."

Standard scope of supply

Air circuit	Air inlet filter
	Coated screw element, 100% oil-free (Class 0)
	Start-up/Safety valve
	Check valve
	Compensator behind element for mechanical decoupling
	Discharge pulsation damper
	Outlet air flange DN200 DIN&ANSI
Oil circuit	Supplied oil-filled
	Completely pre-piped oil circuit
	Integrated oil pump
	Oil cooler
	Oil filter
	Fan + motor
	Built-in oil breather system
Motor	IE3 induction motor, TEFC IP55
Cubicle	Neos VSD inverter, EMC- and RFI filter, TT/TN net
	Elektronikon® Touch controller
	Sensors air & oil pressure & temperature
	SMARTLINK
	Flow control via 4-20 mA (external source)
	LAN or Internet control/monitoring
Bodywork	Sound attenuating canopy
	Frame with forklift/pallet-jack slots
	Side-by-Side installation as standard
Mechanical approval	ASME or CE approval

Hayward Gordon GROUP

5 Brigden Gate
Halton Hills, ON L7G 0A3
info@haywardgordon.com
www.haywardgordon.com

Hayward Gordon
Sharpe Mixers
Scott Turbon Mixer

QUOTATION FOR HAYWARD GORDON SOLIDS HANDLING PUMPS

Date:	5/25/2021	**Project Reference:**	West U WWTP
Quotation No.:	Q1-63415 Rev. 0	**Equipment Reference:**	RAS/WAS Pumps

Customer: Environmental Improvements Inc
1183 Brittmoore, Suite 100
Houston
TX
US 77043-5096

Attention: Jeff Houston

Delivery: 14-16 weeks
Incoterms: EXW
Freight: PREPAID
Terms of Payment: 0 {Net 30 Days}
Taxes: Not Included
Price Validity 60 days
Currency: US $
Salesperson: Dave Miller
Submitted By: Yvonne Bruce

PRODUCT:

QTY	MODEL	UNIT SELL PRICE	LOT SELL PRICE
1	HAYWARD GORDON XCS8D SCREW CENTRIFUGAL PUMP	$25,190.00	$25,190.00

CONSTRUCTION DETAILS:

Wet End:	Casing: ASTM A48 CL30 Cast Iron / Impeller & Suction Liner: ASTM A532 High Chrome Iron
Seal:	John Crane Type 1 Single Seal (SC/SC) - Clean Water Flush Required
Ports/Flanges:	8" suction x 8" discharge - 125#RF
Motor Details:	10HP ,1200RPM, 460V/3/60, 256T, TEFC, w, Thermostat, Inverter Duty Rated
Drive:	Direct Drive / Flexible Coupling
Guard:	OSHA-Coupling Guard
Base/Coverplate:	Steel Baseplate
Pump Setting:	Horizontal

APPLICATION DETAILS:

Fluid:	RAS/WAS	**Impeller Diameter:**	Full	**Solids:**	
Capacity:	1600 GPM	**Viscosity:**	Waterlike	**NPSHR:**	Flooded
Head:	15 ft	**Temperature:**	Ambient		
Pump RPM:	1030 RPM	**Specific Gravity:**	1.00		

REMARKS:

Hayward Gordon's standard epoxy paint is included (Amercoat 370 - Colour - Safety Blue)
Hayward Gordon's Non-Witnessed 6 pt Performance Test is included.
All VFDs, starters and control equipment are not within Hayward Gordon ULC scope of supply and are to be supplied by others
Anchor Bolts are not included

As of the date of this quote and due to the COVID-19 pandemic, the Hayward Gordon Group of companies have taken every precaution to minimize our product delivery schedules to our valued Customers. However due to Federal, State or Provincial mandated restrictions, the Seller may be required to adjust our product delivery lead-times accordingly.

By accepting and issuing a formal purchase order in reference to one of the Hayward Gordon Group of companies 1) Hayward Gordon ULC or 2) Sharpe Mixers, Inc. or 3) Scott Turbon Mixer, Inc. quotes, hereinafter referred to as "Seller", Seller will confirm a ship date of the order based upon the then current environmental impact on the manufacturing schedule.

In the event that due to the COVID-19 pandemic, order fulfilment has to be delayed, Seller will provide notice to you our valued customer. Either Party reserves the right to suspend work on this order, if operations are required to shut down due to the COVID-19 pandemic, for a period of (2) months or longer, at which point both Seller and Buyer will mutually review and either party may terminate with written notification. Buyer agrees to pay Seller for the value of the "unpaid" work performed by Seller, at the date of the termination.

5 Brigden Gate
Halton Hills, ON L7G 0A3
info@haywardgordon.com
www.haywardgordon.com

Hayward Gordon
Sharpe Mixers
Scott Turbon Mixer

GENERAL COMMENTS:

1. Price validity is based on receipt of complete approval and release for production no more than eight weeks after drawings have been submitted by Hayward Gordon ULC.
2. Hayward Gordon ULC's standard Terms and Conditions of Sale apply and are an integral part of this quotation unless specifically noted otherwise in this proposal.
3. All start-up and instructional services not included unless specifically noted otherwise in this proposal.
4. All starters and control equipment are not within Hayward Gordon ULC's scope of supply and are to be supplied by others unless specifically noted otherwise in this proposal.
5. This proposal does not include installation, wiring, field painting or any other items except as specifically described above.

Screw Pumps

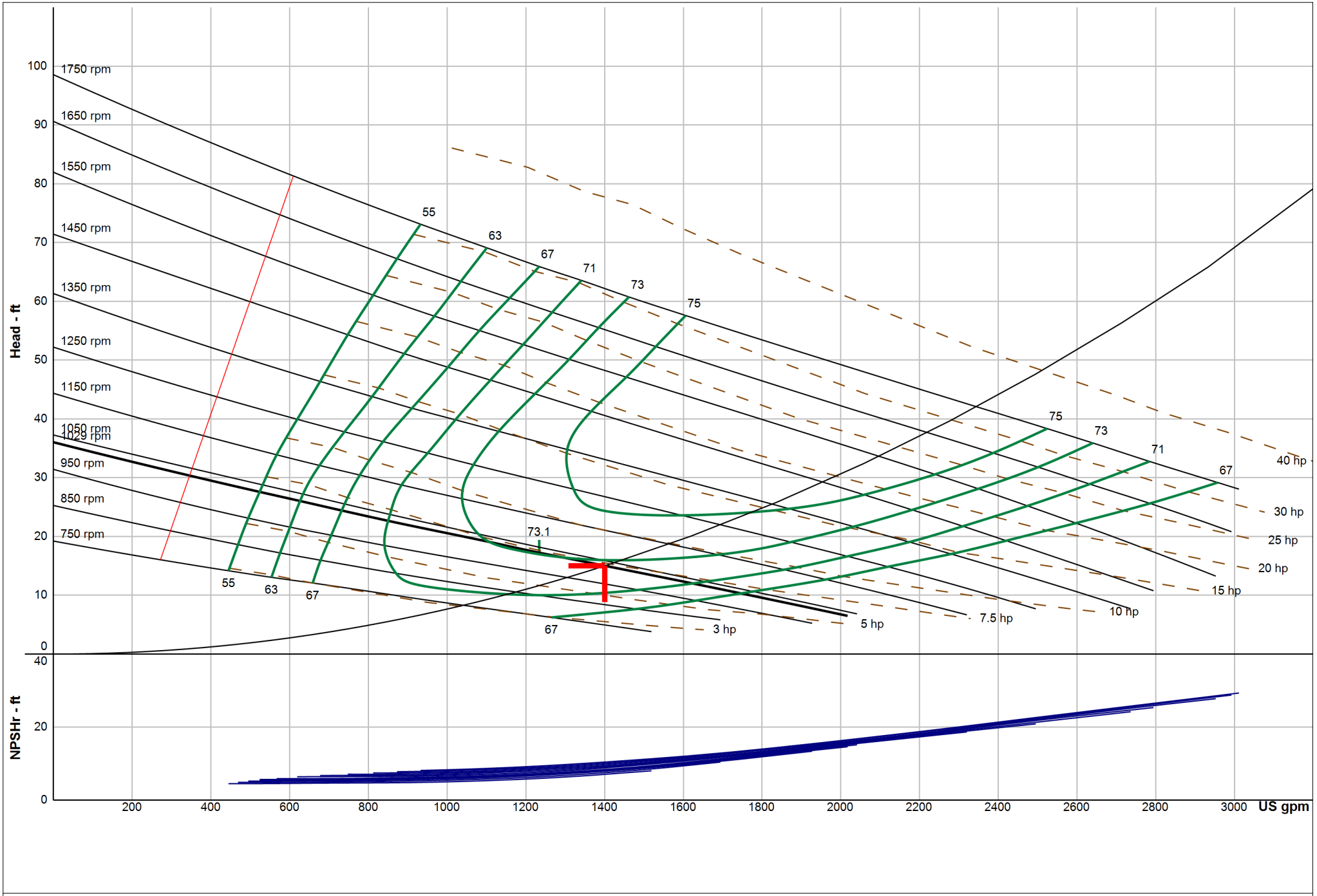

Company:	Hayward Gordon	Size:	XCS8-D
Name:	Catalog: HaywardGordon.60, Vers 1.4.2	Speed:	1029 rpm
Date: 05/25/2021	XCS ScrewCentrifugal - Adjustable	Dia:	11 in
	Design Point: 1400 US gpm, 15 ft	Curve:	005-10605
	Static Head: 0 ft		

Hayward Gordon

DO NOT SCALE

△6 Note: (*) Std. base for XCS6A/B/D △8 with motors 404/405T is supplied with 6 mounting holes – 7/8"Dia.

1. SUCTION AND DISCHARGE FLANGES:
C.I. – 125 lbs R.F.
ALLOYS – 150 lbs R.F. △3
ALL FLANGES MATE WITH STD. ASA FLANGES.

2. PUMP ROTATION–C.W. VIEWED FROM SHAFT END.

3. ALL DIMENSIONS ARE IN INCHES. USE FOR CONSTRUCTION ONLY IF CERTIFIED.

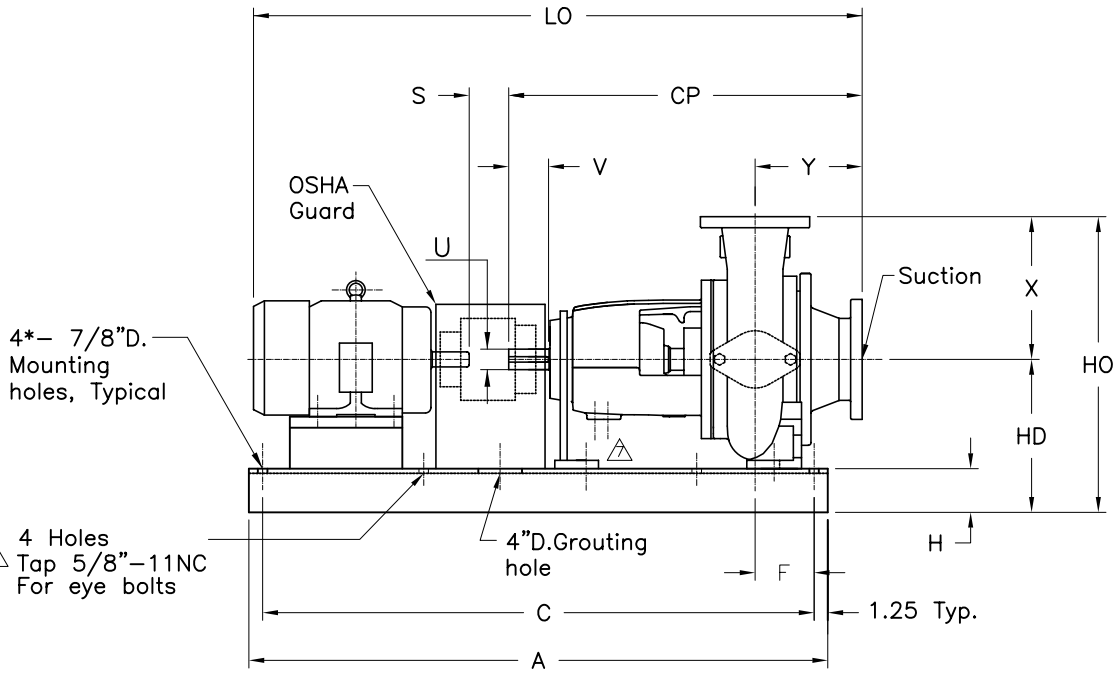

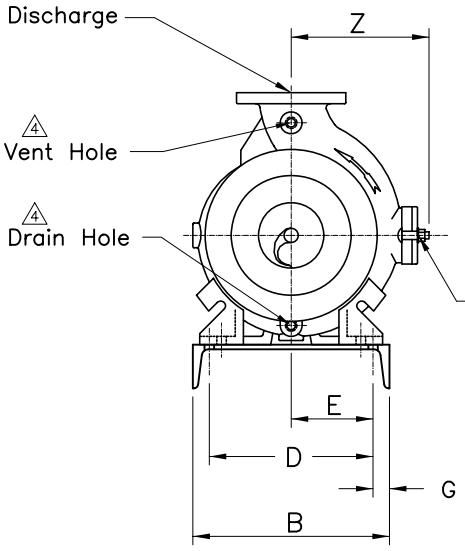

CERTIFIED FOR CONSTRUCTION

DATE SIGNED

HAYWARD GORDON LTD.

Suction / Pump model	Discharge / Motor frame	A	B	C	D	E	F	G	H	S	U	Sq. KEY	V	X	Y	Z	CP	HD	HO	LO	BASE DWG.
XCS6A/B/D △8	256T	78	27	75.5	22	11	7.5	2.5	4.0	5.0	2.18	.50x.50	4.25	16.0	13.5	15.3	43.6	18.5 △7	34.5 △7	73.9	02320394
	284T																			75.3	02320395
	286T																			76.8	02320395
	324T																			78.0	02320396
	326T																			79.5	02320396
	364T																			81.8	02320397
	365T																			82.8	02320397
	404T	90	27	87.5	22	11	7.5	2.5	4.0	7.75										88.8	02330240
	405T																			90.5	02330240
XCS8C/D	215T	66	27	63.5	22	11	7.3	2.5	4.0	3.63	1.88	.50x.50	3.70	15.7	10.9	16.4	33.9	17.5	33.2	57.3	02320387
	254T																			61.0	02320388
	256T																			62.8	02320388
	284T									5.0										64.2	02320389
	286T																			65.7	02320389
	324T																			68.3	02320390
	326T																			70.8	02320390

NO.	DATE:	REVISION	BY	CHK.
8	MAY 12,06	XCS6D ADDED * ECR 05093	LF	
7	NOV 06,01	HD & HO REVISED, V–BELT FOOT SHOWN*ECR 00380	LF	
6	JUL 13,01	ADD NOTE,EYE BOLT HOLES WERE 1/2"DIA.*ECR 01378	LF	
5	JUL 05,01	VENT & DRAIN HOLES ADDED * ECR 00423	LF	
4	MAR28,01	REVISED TITLE BLOCK AS NOTED ECR 01108	ER	
3	DEC15.00	REVISED AS NOTE ECR 00434	ER	
2	MAY23,00	DESCR. REVISED(XCS6 ONLY)*EDP#99002	LF	
1	2MAR00	UPDATED TO LOCATE EYEBOLT CENTRES	TH	

Hayward Gordon
Process Pumps and Mixers.

THIS DRAWING IS THE PROPERTY OF HAYWARD GORDON AND MAY NOT BE USED OR COPIED EXCEPT AS EXPRESSLY AUTHORIZED BY IT. THIS DRAWING IS SUBJECT TO RECALL.

TITLE
STANDARD DIMENSIONAL DRAWING FOR DIRECT DRIVE XCS6A/B/D (3G PFR) & XCS8C/D
△8 △2

DESIGN BY:	DRAWN BY:	CHECKED BY:	DATE:
	JF		AUGUST 31 1998
SCALE: N.T.S.	SIZE: B	DWG.# 02320392	SHEET 1 of 1

Hayward Gordon GROUP

5 Brigden Gate
Halton Hills, ON L7G 0A3
info@haywardgordon.com
www.haywardgordon.com

Hayward Gordon
Sharpe Mixers
Scott Turbon Mixer

TERMS AND CONDITIONS OF SALE

FORMATION OF AGREEMENT

These Terms and Conditions of Sale apply to the purchase of Products, Services, or both, by Buyer from Hayward Gordon ULC (hereinafter referred to as "Seller"), each as identified in Seller's quote. These Terms and Conditions, together with Seller's quote, comprise the entire agreement between the parties (the "Agreement").

Seller's agreement to furnish Product or Services is expressly conditioned on Buyer's agreement to these Terms and Conditions. An order for Products, Services or both, constitutes Buyer's acceptance of these terms and conditions. Seller rejects any terms, conditions, or warranties in Buyer's purchase order or other document or communication that are additional to or differ from those set out in this Agreement, unless set out in writing and signed by Seller's authorized representative.

PRICES

Quotes. Prices in Seller's quote are valid for 30 days from the date of the quote unless otherwise specified in writing.

Currency. Prices are in the currency specified in Seller's quote. If no currency is specified, prices to buyers located in Canada are in Canadian dollars and prices to all other buyers are in US dollars.

Taxes excluded. Prices do not include any Taxes related to the Products or Services supplied under this Agreement, which are the responsibility of Buyer, unless Buyer presents a waiver or an exemption certificate acceptable to Seller.

PAYMENT

Terms. Buyer will pay all invoiced amounts in full, without deduction, back charge or set-off, within 30 days from the date of Seller's invoice. Payment is not contingent on Buyer receiving payment from Buyer's customer.

Late Payment. If payment is not made when required, Seller may at its option take one or more of the following actions: (i) treat such failure as a repudiation of all or a portion of the order that has not been fully performed and immediately suspend performance, (ii) continue production and make shipment under reservation of title or a security interest, and demand payment against tender of documents of title; (iii) charge interest at the lesser of 1.5% per month and the maximum rate permitted under applicable law, from the due date until paid, plus Seller's reasonable costs of collection; and (iv) Buyer agrees that Seller may enter the premises where any Products for which Buyer has not paid are located, repossess such Products whatever the mode of their attachment to realty or other property, sell the repossessed Products, apply the proceeds to the overdue payment, and recover any deficiency from Buyer.

DELIVERY, RISK, TITLE

Delivery dates. Delivery dates stated in advance of shipment, including in Seller's quote, are estimates only and are not guaranteed. Seller will not be liable for or penalized as a result of delays in shipment for any cause. Seller reserves the right, upon prior notice to Buyer, to make partial deliveries or partial performance, which may be separately invoiced.

Buyer Delay. If Products cannot be shipped to or received by Buyer when ready because of any cause attributable to Buyer or its other contractors, Seller may store the Products at the sole expense and risk of Buyer; in such case, Seller will invoice Buyer and terms of payment will apply as if delivery had been made on the original delivery date.

Damage/Shortage. Claims for damages or shortages must be made within 5 days after receipt of Products.

CHANGES

Orders accepted by Seller are not subject to change or cancellation by Buyer, except with Seller's written consent. Where Seller authorizes changes (including changes to specifications, and special packaging, tests or inspections in addition to Seller's normal procedures and not set out in Seller's Quote), Seller may charge Buyer reasonable costs of such change.

INSTALLATION

All Products will be installed by and at the risk and expense of Buyer, unless otherwise specified in Seller's quote or agreed to in writing.

WARRANTY

Warranty. Seller warrants that during the warranty period:

(a) all Products sold by it to Buyer pursuant to the Agreement, when properly stored, installed, used and maintained by Buyer, will in all material respects, conform to the specifications and be free from defects in materials and workmanship under normal usage; and

(b) the Services performed by Seller will be performed in a good and workmanlike manner in accordance with any mutually agreed specifications.

Warranty Period. The warranty period for Products is one year from date of shipment.

Warranty Claims/Seller's Obligations. A claim must be submitted in writing, within 30 days of discovery, within the warranty period, to give rise to Seller's obligations. Seller's sole liability and Buyer's exclusive remedy for a breach of this warranty is limited to repair or replacement by Seller, in the case of the Product warranty, and re-performance by Seller in the case of the Services warranty. Such repair, replacement or re-performance

5 Brigden Gate
Halton Hills, ON L7G 0A3
info@haywardgordon.com
www.haywardgordon.com

will not extend the warranty period. Seller may require access to complete and accurate records of operation and maintenance during the warranty period, or the return of defective parts, freight prepaid, before a warranty claim is recognized. **Third-party components.** Products may contain components from third party manufacturers. Seller will use reasonable commercial efforts to extend to Buyer the benefit of any warranty given by the component manufacturer to Seller where the third party manufacturer permits it to do so.

No other warranties.

All other warranties, representations, terms and conditions (express, implied or statutory) as to quality, condition, description, merchantability, fitness for purpose, compliance with sample, or non-infringement (except implied warranty of title) are expressly excluded to the fullest extent permitted by law.

LIMITATION OF LIABILITY

Exclusions. Without limiting the foregoing, Seller will have no liability in respect of:

(i) failure to follow Seller's use restrictions, specifications, recommendations or instructions or any misuse of the Products; (ii) any alteration, modification, repair, or enhancement of the Products by Buyer or any third party without Seller's prior written consent;(iii) any defect in the Product arising from designs, specifications or materials supplied by Buyer; (iv) any shipping, storage or working conditions different than those advised by Buyer after Seller's delivery of Products to Buyer; (v) chemical attack or wear; (vi) normal wear and tear; (vii) accident; (viii) fraud, negligence or wilful misconduct of Buyer or any of its affiliates or representatives; (ix) any Product for which the purchase price has not been paid in full in accordance with the Agreement.

Limitation.

(i) In no event will Seller' liability, in the aggregate, for damages arising out of the use of the Product or Services, or arising under this Agreement, whether in contract, tort (including negligence), or otherwise, to Buyer or any other person exceed the amount paid by Buyer to Seller under the Agreement for the Products or Services to which such claim or damages relates;

(ii) Seller will not be liable for loss of profit or revenues, loss of use of equipment or systems, loss or deferral of production, interruption of business or loss of contract, loss of use, increased operating costs, or claims of Buyer's customers for any of the foregoing, any special, consequential, incidental, indirect, or punitive damages, whether or not foreseeable at the date of Seller starting performance of the Agreement and even if Seller is advised in advance of the possibility of any such loss or damages

INDEMNITY

Each party will indemnify the other party from and against claims brought by a third party, on account of personal injury or damage to the third party's tangible property, to the extent caused by the negligence of the indemnifying party in connection with this Agreement. If the injury or damage is caused by joint or concurrent negligence of Buyer and Seller, the loss or expense will be borne by each party in proportion to its degree of negligence. For purposes of Seller's indemnity obligation, no part of a Product is considered third party property, and "third party" does not include Buyer or any subsequent owner of the Products, their subsidiaries, parents, affiliates, agents, successors or assigns, including any operation or maintenance contractor, or their insurer.

EXCUSED PERFORMANCE/FORCE MAJEURE

A party will not be liable in respect of the non-performance of any of its obligations to the extent such performance is prevented by any circumstances beyond its reasonable control including but not limited to, strikes, lock-outs or labour disputes of any kind (whether relating to its own employees or others), fire, flood, explosion, natural catastrophe, military operations, blockade, sabotage, revolution, riot, civil commotion, war or civil war, acts or threats of terrorism. If such an event occurs, the time for performance will be extended by the amount of time lost by reason of the event plus such additional time as may be needed to overcome the effect of the event.

GOVERNING LAW

Unless otherwise agreed to in writing, the laws of the jurisdiction from which Seller ships the Product(s) will govern the interpretation and construction of this Agreement, and the Parties agree to submit to the exclusive jurisdiction of the courts of such jurisdiction.

Waiver. No waiver of any of the provisions of this Agreement will constitute a waiver of any other provision (whether or not similar).

Severability. If any provision of this Agreement is determined to be illegal, invalid or unenforceable, that provision will be severed from this Agreement and the remaining provisions will remain in full force and effect

Assignment/Subcontracting.

Seller may assign or novate its rights and obligations under this Agreement, in whole or in part, to any of its affiliates. Seller may subcontract portions of the work to any third party.

HAYWARD GORDON
Solids Handling Pumps
5 Brigden Gate, Halton Hills, Ontario L7G 0A3
Tel: (905) 693-8595 • Fax: (905) 693-1452 •
www.haywardgordon.com

XCS Screw Centrifugal Pumps Base Mounted

SPECIFICATIONS

General

Pumps will be a screw centrifugal design of heavy-duty construction intended for services requiring reliable solids handling, gentle pumping action, high efficiency, and low NPSHR.

Performance

The pump shall be selected to meet the following criteria:

Fluid	
Viscosity	
Solids %	
Capacity	
Suction Head	
Min. Discharge Size	
Max. Pump RPM	

S.G.	
Temp	
Solid Type/Size	
TDH	
NPSH	
Motor RPM	
Motor HP	

Pump

A. Casing: The pump casing and inspection port cover shall be constructed of ASTM A48 Class 30 cast iron (Optional: ASTM A532 High Chrome Iron 450BHN or 316SS). The pump casing shall incorporate a replaceable suction piece or suction liner constructed of ASTM A48 Class 30 cast iron (Optional: ASTM A532 High Chrome Iron 450BHN or CD4MCU). The casing backplate shall have a spiral cutting groove on the surface that is in close clearance to the rear flange of the impeller. The casing shall be a clamp-type design, with integrally cast feet to allow removal of the power frame for maintenance without disturbing suction or discharge piping.

   The internal profile of the suction piece or liner shall be straight sided to allow even axial adjustment of the impeller running clearance. The suction piece or liner shall also have an internal spiral groove that provides a cutting action against the impeller vane to avoid clogging of fibrous material.

   Adjustable liner option (available on 5” pumps and larger): Suction liners must allow for external adjustment of the impeller clearance via three regulating screws without disassembly of the pump.

   Replaceable suction piece option (available on all pumps): Replaceable suction pieces must be adjustable via the use of shims.

B. Impeller: The pump impeller will be constructed of ASTM A536 Ductile Iron (Optional: ASTM A532 High Chrome Iron 450BHN or 316SS), and will be statically and dynamically balanced. The impeller flange shall incorporate a spiral groove or pump out vanes to eject material from between the impeller and backplate. The single-passage impeller shall combine the action of a positive displacement screw and a single vane centrifugal impeller. The impeller, due to its design, shall provide gentle pumping of the process fluid.

C. Shaft: The shaft will be constructed of 4140 carbon steel (Optional: 316SS), protected through the seal area by a renewable sleeve. Sleeve material will be hardened 410 stainless steel for packing or 316SS for mechanical seals. An O-ring between sleeve and shaft will prevent pumped fluid from contacting the shaft. (Optional: Single or Double mechanical seal)

HAYWARD GORDON
Solids Handling Pumps
5 Brigden Gate, Halton Hills, Ontario L7G 0A3
Tel: (905) 693-8595 • Fax: (905) 693-1452 •
www.haywardgordon.com

XCS Screw Centrifugal Pumps Base Mounted

SPECIFICATIONS

D. Stuffing Box/Seal Housing: The stuffing box/seal housing will be constructed of Cast Iron A-48 Class 30 and is designed to accommodate commercially available sealing designs (single, double, tandem & cartridge mechanical seals, or standard packing).

An integral seal housing/bearing frame design where failure of the secondary mechanical seal will allow contamination of the bearing housing is not acceptable.

Any leakage will be retained by a drainable reservoir, integral with the bearing housing. A 0.75" NPT hole will be provided to connect seal water drainage piping.

E. Seal Type: Graphite acrylic braided packing with a Teflon lantern ring, retained by a bronze, split adjustable gland plate (OPTIONAL MECHANICAL SEAL DESIGNS: single, double, cartridge). Flush connections to be provided.

F. Bearing Frame: The bearing frame shall be cast iron and should be fitted with grease nipples for grease lubrication or with a constant level oiler and vent and drain plugs for oil lubrication.

The bearing lives are to be rated for a minimum of 100,000 hours L10 life, based on calculated loads due to hydraulic thrust encountered at the duty point, as well as other mechanical loading due to belt drives or shaft and impeller weight.

G. Pump and Motor Base:

Horizontal: The pump and motor base shall be fabricated from steel, designed to provide rigid support of the pump and motor. Each base shall be furnished with suitable bolt and grout holes to facilitate mounting at site. Units shall be provided with either V-Belts and sheaves or a direct drive coupling to provide the required pump speed to meet performance conditions. Suitable OSHA guards are required.

Vertical Dry Pit Mounting: The pump shall be supported by an independent pedestal base fabricated from steel or cast iron, designed to provide rigid support of the pump and motor. The independent pump support pedestal shall be designed for easy access to the handhole cleanout and such that the suction elbow can be removed for maintenance without having to remove or dismantle any of the pump components. Each base shall be furnished with suitable bolt and grout holes to facilitate mounting at site.

Concertor N100-500

The most intelligent wastewater pump on the market. Suitable for customers operating traditional on/off pump stations who want to benefit from re-settable pump performance, clog detection and pump cleaning, soft start, constant power and motor protection.

FLYGT a xylem brand

Technical specification



Curves according to: Water, pure [100%],39.2 °F,62.42 lb/ft³,1.69E-5 ft²/s

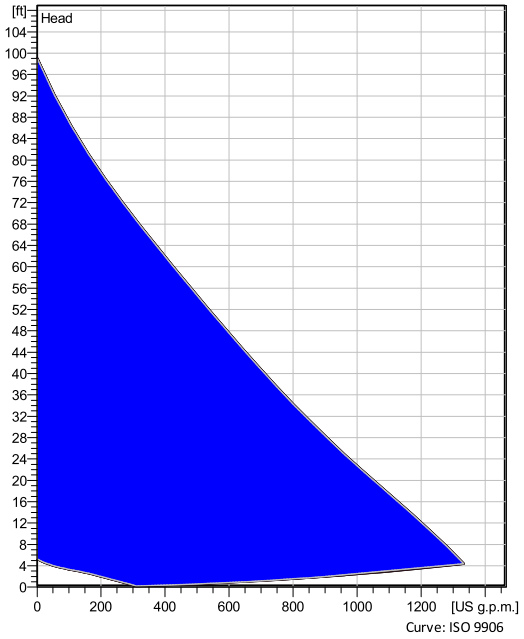

Curve: ISO 9906

Configuration

Motor number
N6020.181 18-08-1AZ-W 3hp

Installation type
P - Semi permanent, Wet

Impeller diameter
200 mm

Discharge diameter
4 inch

Pump information

Impeller diameter
200 mm

Discharge diameter
4 inch

Inlet diameter
120 mm

Maximum operating speed
500-1430.7 rpm

Number of blades
2

Max. fluid temperature
40 °C

Materials

Impeller
Hard-Iron ™

Project	**Created by**	Whit Kelley	
Block	**Created on**	6/7/2021	**Last update** 6/7/2021

Concertor N100-500

Technical specification

Motor - General

Motor number N6020.181 18-08-1AZ-W 3hp	**Phases** 3~	**Rated speed** 500-1431 rpm	**Rated power** 3 hp
ATEX approved No	**Insulation class** H	**Rated current** 3.54 A	**Type of Duty** S1
Frequency 60 Hz	**Rated voltage** 460 V	**Motor efficiency class** IE4 according to IEC/TS 60034-30-2 Ed. 1	

Motor - Technical

Power factor - 1/1 Load 0.94	**Motor efficiency - 1/1 Load** 89.0 %	**Nominal speed - 1/1 Load (200-240V)** 1150	**Nominal speed - 1/1 Load (380-480V)** 2300
Power factor - 3/4 Load 0.94	**Motor efficiency - 3/4 Load** 89.0 %	**Nominal speed - 3/4 Load (200-240V)** 1035	**Nominal speed - 3/4 Load (380-480V)** 2070
Power factor - 1/2 Load 0.93	**Motor efficiency - 1/2 Load** 90.0 %	**Nominal speed - 1/2 Load (200-240V)** 920	**Nominal speed - 1/2 Load (380-480V)** 1840

Starting current
3.54 A

Project	**Created by**	Whit Kelley	
Block	**Created on**	6/7/2021	**Last update** 6/7/2021

Concertor N100-500

Monitoring and Control equipment

FLYGT
a xylem brand

Project		**Created by**	Whit Kelley	**Last update**	6/7/2021
Block		**Created on**	6/7/2021		

Concertor N100-500

Performance curve

FLYGT a xylem brand

Duty point

Flow	Head
19.6 US g.p.m.	11.9 ft

Curves according to: Water, pure [100%],39.2 °F,62.42 lb/ft³,1.69E-5 ft²/s

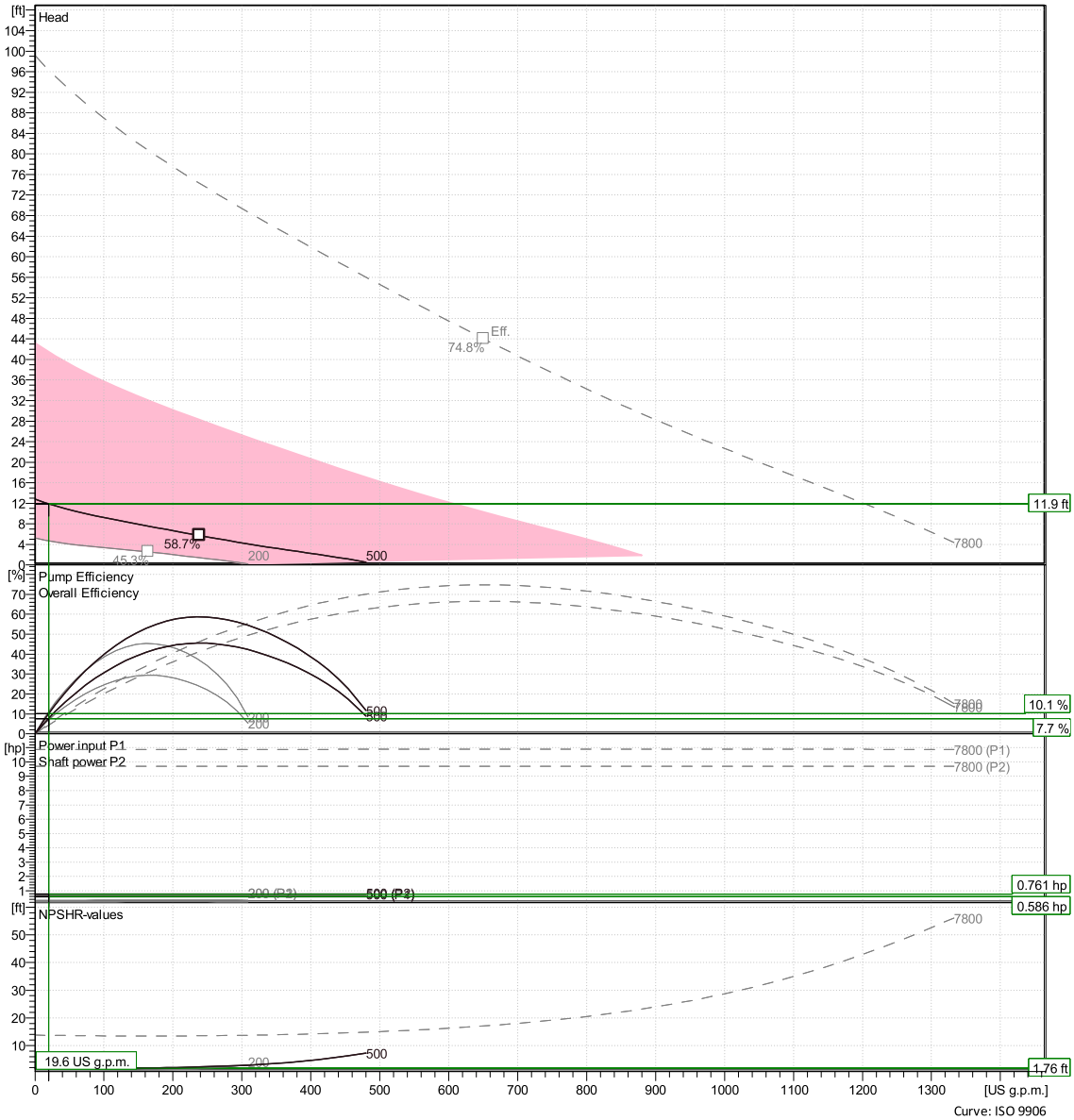

Curve: ISO 9906

Project		**Created by**	Whit Kelley	**Last update**	6/7/2021
Block		**Created on**	6/7/2021		

Concertor N100-500

Duty Analysis

FLYGT
a xylem brand

Curves according to: Water, pure [100%] ; 39.2°F; 62.42lb/ft³; 1.69E-5ft²/s

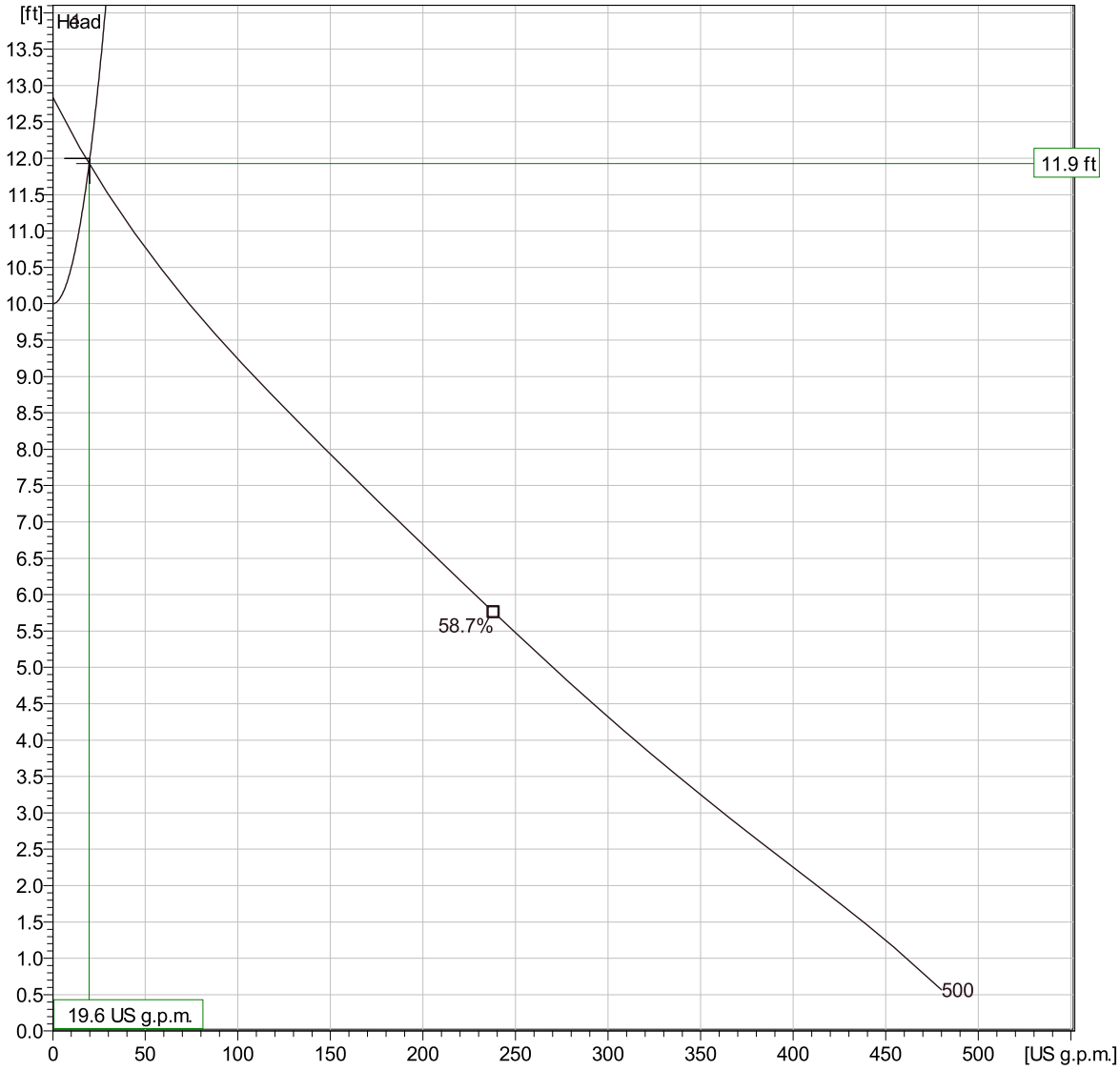

Operating characteristics

Pumps / Systems	Flow	Head	Shaft power	Flow	Head	Shaft power	Hydr.eff.	Specific Energy	NPSHre
1	19.6 US g.p.m.	11.9 ft	0.586 hp	19.6 US g.p.m.	11.9 ft	0.586 hp	10.1 %	482 kWh/US M(	1.76 ft

Project		**Created by**	Whit Kelley		
Block		**Created on**	6/7/2021	**Last update**	6/7/2021

Concertor N100-500

Dimensional drawing

FLYGT
a xylem brand

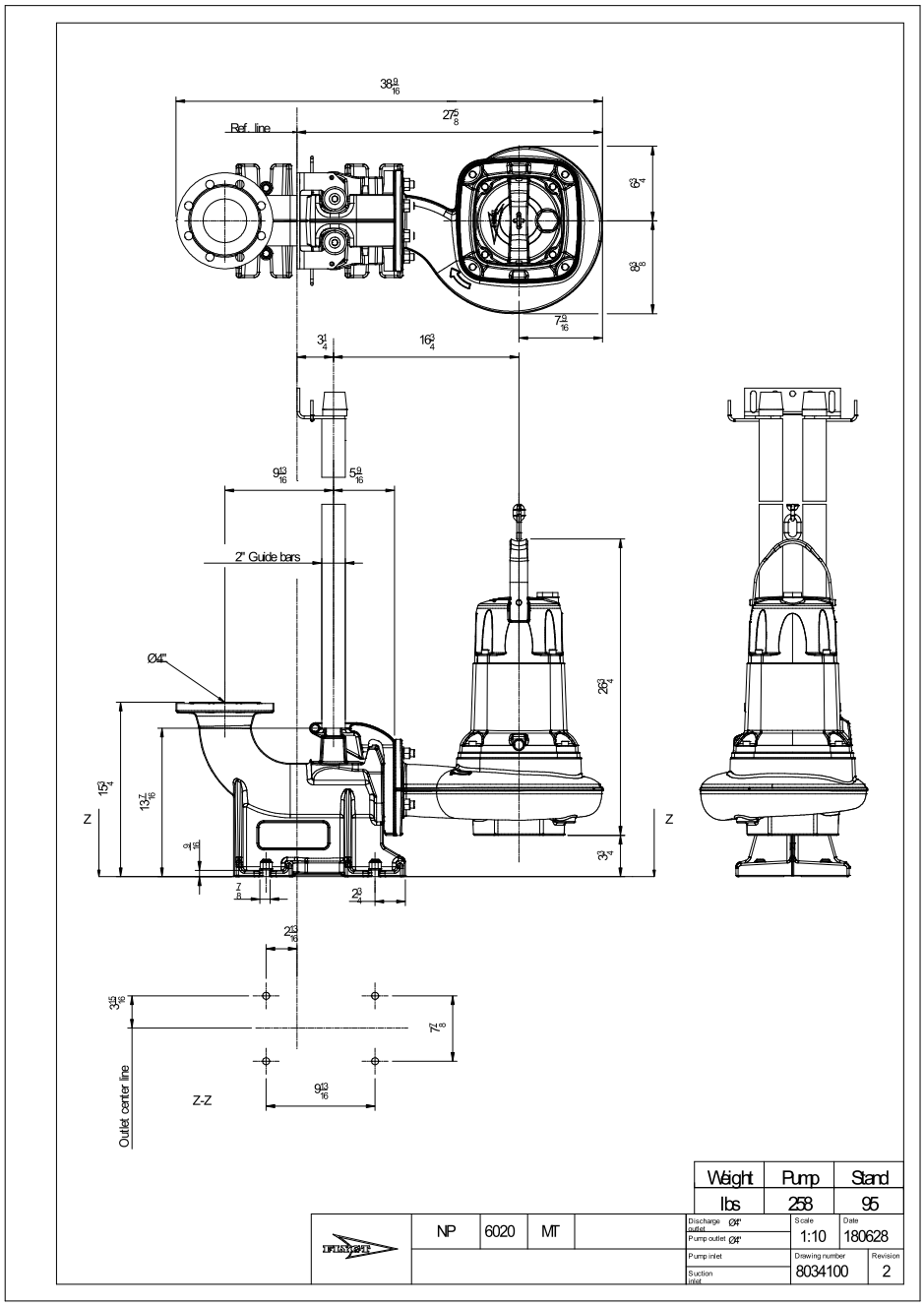

Project	**Created by**	Whit Kelley	
Block	**Created on**	6/7/2021	**Last update** 6/7/2021

non potable pumps





PUMPS FOR WASTEWATER TREATMENT PLANT APPLICATIONS

Gorman-Rupp provides wastewater-handling solutions for all your treatment system's pumping needs.

GORMAN-RUPP PUMPS

The Pump People®

PROVIDING QUALITY PUMPING EQUIPMENT FOR OVER 80 YEARS





A History of Solving Wastewater Challenges

In 1933, Gorman-Rupp developed its first self-priming centrifugal pump to provide our customers with a durable, reliable pump that could perform in a challenging environment. Since then, we've worked closely with our customers around the world to meet their wastewater treatment needs.

With over one million Gorman-Rupp pumps and pump stations installed to date, we have the experience to intimately understand municipal pumping requirements. Our worldwide network of distributors has experienced industry professionals on staff, giving us firsthand knowledge of your most pressing challenges.

We help you solve these challenges and make the most of your limited resources by designing our pumps, and stations, to deliver decades of trouble-free performance. When you choose Gorman-Rupp for your municipal pumping applications, you'll experience some of the lowest lifecycle costs in the industry and benefit from minimal service interruptions. And you'll enjoy one of the highest customer satisfaction ratings in the industry—guaranteed.

State-of-the-Art Equipment Built in State-of-the-Art Facilities

As the world's leading manufacturer of pumps and pumping systems, Gorman-Rupp offers you access to one of the largest and highest quality lines of industrial pumps available in the market place today.

We maintain nearly one million square feet of the most modern manufacturing, testing and warehousing facilities in the world. Our experienced engineers take advantage of the latest technologies and innovations to custom-design, manufacture and assemble our products.

We perform rigorous testing based on Hydraulic Institute Standards and test to customers' actual operating conditions in our one-of-a-kind testing facility guaranteeing innovative, superior-quality products that are ready to tackle your toughest jobs.

To ensure you get the right equipment for your requirements, Gorman-Rupp partners with a worldwide network of distribution and provides them with the best and most extensive training. Gorman-Rupp distributors will work hand-in-hand with you to recommend, customize and specify equipment. And they are always available should you ever require service assistance.

non potable pumps



Super T Series® dewatering feed pumps

APPLICATIONS:

- Influent Equalization Pumps
- Lift Stations
- Grit Pumps
- Primary Sludge Pumps
- RAS Pumps
- Utility Water (Non-Potable) Pumps
- Effluent Pumps
- Scum Pumps
- WAS Pumps
- Supernatant Recirculation Pumps
- Dewatering Feed Pumps
- Sludge Loading Pumps

OUR MUNICIPAL LINE OF PRODUCTS INCLUDES:

Self-Priming Centrifugal Pumps

Gorman-Rupp self-priming centrifugal pumps are easy to install and easy to service. Because they're self-priming, they can be mounted high and dry at floor level, with only the suction line down in the liquid. If service or maintenance is required, it can be completed quickly and easily. There are no long drive shafts to install and align. And, there is never any need for service personnel to enter the sump.

Standard and Horizontal End Suction Centrifugal Pumps

Gorman-Rupp offers hundreds of models of high volume, high pressure centrifugal pumps. These high efficiency pumps have few moving parts, so maintenance and service are minimal.

Submersible Pumps

Gorman-Rupp submersible pumps are designed for efficient operation in both dewatering and solids-handling applications, while remaining out-of-sight, beneath the fluid's surface. Available with both electric and hydraulic-driven motors and including versions rated for standard and hazardous locations, there are models available to meet most pumping requirements.

ReliaSource® Lift Stations

Gorman-Rupp engineers a full line of lift stations, which are 100% Gorman-Rupp custom engineered and manufactured. All Gorman-Rupp pump packages include an extensive selection of pumps, motors, controls, valves and accessories and can be housed in durable fiberglass enclosures. The stations come pretested and ready for immediate hookup to power and piping. And, every ReliaSource® lift station is backed by an industry leading five-year warranty, guaranteed.



ERADICATOR® Solids Management System

For applications dealing with flushable wipes, rags, sludge or any other clog-prone material, the Eradicator® Solids Management System is available for all sizes of Gorman-Rupp Super T Series® pumps.


Super T Series® grit pump

INDUSTRY-LEADING SUPPORT & WARRANTY

Industry-Leading Five-Year Warranty

Gorman-Rupp has you covered for five years on all:

Gorman-Rupp sets the industry standard in heavy duty solids- and limited solids-handling pumps for all your wastewater treatment pumping needs. Every pump is factory-tested for long lasting, trouble-free use.

Gorman-Rupp stands behind the quality of our wastewater pumps and pump systems to ensure they meet your requirements for the long haul. Every pump and pump station is factory-tested for long lasting, trouble-free use. We maintain client satisfaction well beyond product installation and offer a variety of services to meet your needs, including:

Training

We provide in-depth training seminars for service personnel in our one-of-a-kind training facility. You'll learn about our products, technologies and how to service your equipment.

Service

Because our equipment is designed for minimum maintenance and ease of service, it's simple and cost-effective for your wastewater treatment plant to perform their own service, and only minimal resources are required to keep our pumps and pump packages operating at peak performance.

Our worldwide distribution network is available for service questions and support as well as warranty work. Should you wish to outsource service, our distribution network can provide ongoing service for your pump and/or pump package.

Fast Parts Service

When you need a replacement part for any of our products, you'll have it fast. With the largest parts and pump inventory in the industry at our disposal, we fill and ship most parts orders within 24 hours.

Industry-Leading Warranty

The warranties on Gorman-Rupp products are some of the best in the industry. Because of our quality manufacturing processes and our rigorous product testing, we have confidence in the quality of our products. Thanks to our warranties, you can too. Gorman-Rupp has you covered with warranties up to five years. Visit www.GRpumps.com/warranty for specific warranty information.

non potable pumps

THE LONGEST LASTING PUMPS IN THE BUSINESS



This ReliaSource® Above-Ground Submersible Valve Package (ASVP) utilizing SF Series® solids-handling submersible pumps transfers sludge at a wastewater treatment plant.

Self-Priming Centrifugal Pumps



Ultra V Series® Heavy-Duty Solids-Handling Pumps
Size: 3″ (75 mm) to 6″ (150 mm)
Max Capacity: 1900 GPM (119.9 lps)
Max Head: 168′ (51.2 m)
Max Solids: 3″ (76.2 mm)



Ultra V Series® w/UltraMate® Heavy-Duty Solids-Handling Pumps
Size: 3″ (75 mm) to 6″ (150 mm)
Max Capacity: 1900 GPM (119.9 lps)
Max Head: 325′ (99.1 m)
Max Solids: 3″ (76.2 mm)



T Series® & Super T Series® Heavy-Duty Solids-Handling Pumps
Size: 2″ (50 mm) to 10″ (250 mm)
Max Capacity: 3400 GPM (214.5 lps)
Max Head: 130′ (39.6 m)
Max Solids: 3″ (76.2 mm)
2″ available in T Series® only



10 Series® Heavy-Dut Solids-Handling Pumps
Size: 1.5″ (38 mm) to 12″ (300 mm)
Max Capacity: 6700 GPM (422.7 lps)
Max Head: 130′ (39.6 m)
Max Solids: 3″ (76.2 mm)



80 Series® Heavy-Duty Solids-Handling Pumps
Size: 1.25″ (32 mm) to 10″ (250 mm)
Max Capacity: 2800 GPM (176.7 lps)
Max Head: 205′ (62.5 m)
Max Solids: 2.5″ (63.5 mm)



Super U Series® Limited Solids-Handling Pumps
Sizes: 3″ (75 mm) to 6″ (150 mm)
Max Capacity: 1500 GPM (94.6 lps)
Max Head: 207′ (63.1 m)
Max Solids: 1.25″ (31.8 mm)

Standard Centrifugal Pumps



VG & VGH Series High Efficiency Pumps
Size: 1.25″ (30 mm) to 8″ (200 mm)
Max Capacity: 4900 GPM (309.1 lps)
Max Head: 500′ (152.4 m)
Max Solids: 1.38″ (35.1 mm)

Standard Horizontal End Suction Centrifugal Pumps



6500 Series® Solids- & Clean Liquids-Handling Pumps
Size: 3″ (75 mm) to 16″ (400 mm)
Max Capacity: 15000 GPM (946.4 lps)
Max Head: 530′ (161.5 m)
Max Solids: 4″ (101.6 mm)

Submersible Centrifugal Pumps



SF Series® Solids-Handling Pumps
Sizes: 3″ (75 mm) to 8″ (200 mm)
Max Capacity: 3400 GPM (214.5 lps)
Max Head: 170′ (51.8 m)
Max Solids: 3″ (76.2 mm)
Horsepower: 3 HP to 75 HP

MUNICIPAL WASTEWATER TREATMENT PLANT

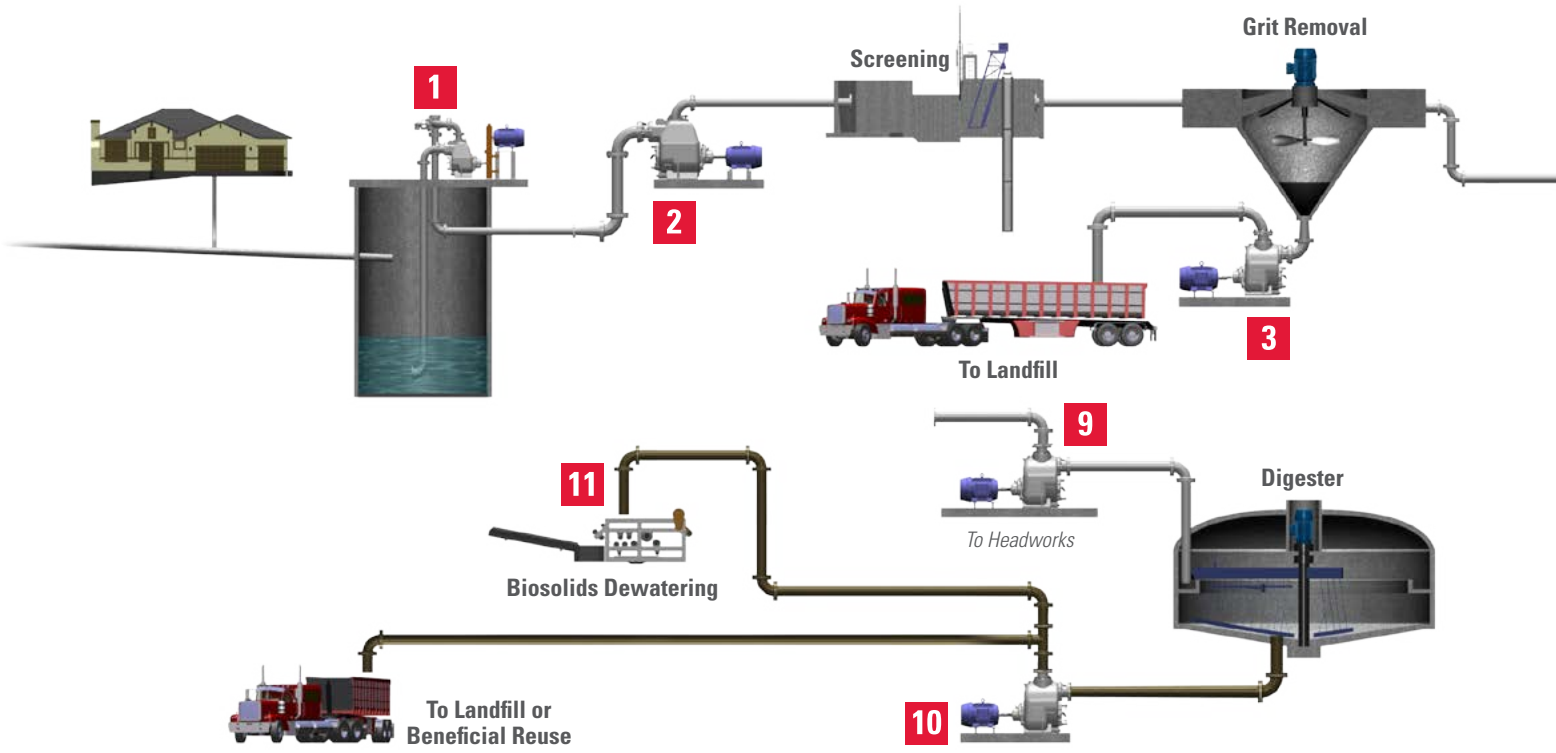

01 | Influent Pump Station

- **ReliaSource® Modular Above-Ground**
  Pump Size: 2″ (50 mm) to 12″ (300 mm)
  Max Capacity: 5200 GPM (328.1 lps)
  Max Head: 320′ (97.5 m)
  Max Solids: 3″ (76.2 mm)
- **ReliaSource® 8x9 Above-Ground**
  Pump Size: 3″ (75 mm) to 8″ (200 mm)
  Max Capacity: 2600 GPM (164.0 lps)
  Max Head: 160′ (48.8 m)
  Max Solids: 3″ (76.2 mm)
- **ReliaSource® 8x12 Above-Ground**
  Pump Size: 3″ (75 mm) to 8″ (200 mm)
  Max Capacity: 2600 GPM (164.0 lps)
  Max Head: 320′ (97.5 m)
  Max Solids: 3″ (76.2 mm)
- **ReliaSource® 6x6 Above-Ground**
  Pump Size: 2″ (50 mm) to 6″ (150 mm)
  Max Capacity: 1300 GPM (82.0 lps)
  Max Head: 150′ (45.7 m)
  Max Solids: 3″ (76.2 mm)
- **ReliaSource® 6X6T Above-Ground**
  Pump Size: 3″ (75 mm) to 6″ (150 mm)
  Max Capacity: 1475 GPM (93.1 lps)
  Max Head: 160′ (48.8 m)
  Max Solids: 3″ (76.2 mm)
- **ReliaSource® 7x10 Above-Ground**
  Pump Size: 3″ (75 mm) to 8″ (200 mm)
  Max Capacity: 2500 GPM (157.7 lps)
  Max Head: 160′ (48.8 m)
  Max Solids: 3″ (76.2 mm)
- **ReliaSource® Below-Ground**
  Pump Size: 3″ (75 mm) to 10″ (250 mm)
  Max Capacity: 3300 GPM (208.2 lps)
  Max Head: 155′ (47.2 m)
  Max Solids: 3″ (76.2 mm)
  Station Sizes: 7′6″ (2.3 m) and 10′ (3.1 m)
- **ReliaSource® Above-Ground Submersible Valve Package (ASVP)**
  Pump Size: 3″ (75 mm) to 6″ (150 mm)
  Max Capacity: 1600 GPM (100.9 lps)
  Max Head: 128′ (47.2 m)
  Max Solids: 3″ (76.2 mm)
  Horsepower: 3 HP to 50 HP
- **ReliaSource® Auto-Start**
  Pump Size: 3″ (75 mm) to 10″ (250 mm)
  Max Capacity: 3400 GPM (214.5 lps)
  Max Head: 320′ (97.5 m)
  Max Solids: 3″ (76.2 mm)
- **ReliaSource® Base-Mounted**
  Pump Size: 2″ (50 mm) to 10″ (250 mm)
  Max Capacity: 3400 GPM (214.5 lps)
  Max Head: 320′ (97.5 m)
  Max Solids: 3″ (76.2 mm)

02 | Influent Equalization Pump

- **Ultra V Series® Self-Priming Pumps**
- **Super T Series® Self-Priming Pumps**
- **10 Series® Self-Priming Pumps**
- **6500 Series® Horizontal End Suction Pumps**
- **SF Series® Submersible Pumps**

03 | Grit Pump

- **Ultra V Series® Self-Priming Pumps**
- **Super T Series® Self-Priming Pumps**
- **10 Series® Self-Priming Pumps**
- **SF Series® Submersible Pumps**

04 | Primary Sludge Pump

- **Ultra V Series® Self-Priming Pumps**
- **Super T Series® Self-Priming Pumps**
- **10 Series® Self-Priming Pumps**
- **6500 Series® Horizontal End Suction Pumps**
- **SF Series® Submersible Pumps**

05 | Scum Pump

- **Ultra V Series® Self-Priming Pumps**
- **Super T Series® Self-Priming Pumps**
- **6500 Series® Horizontal End Suction Pumps**
- **SF Series® Submersible Pumps**

06 | RAS & WAS Pumps

- **Ultra V Series® Self-Priming Pumps**
- **Super T Series® Self-Priming Pumps**
- **10 Series® Self-Priming Pumps**
- **6500 Series™ Horizontal End Suction Pumps**
- **SF Series® Submersible Pumps**

PUMPING APPLICATIONS

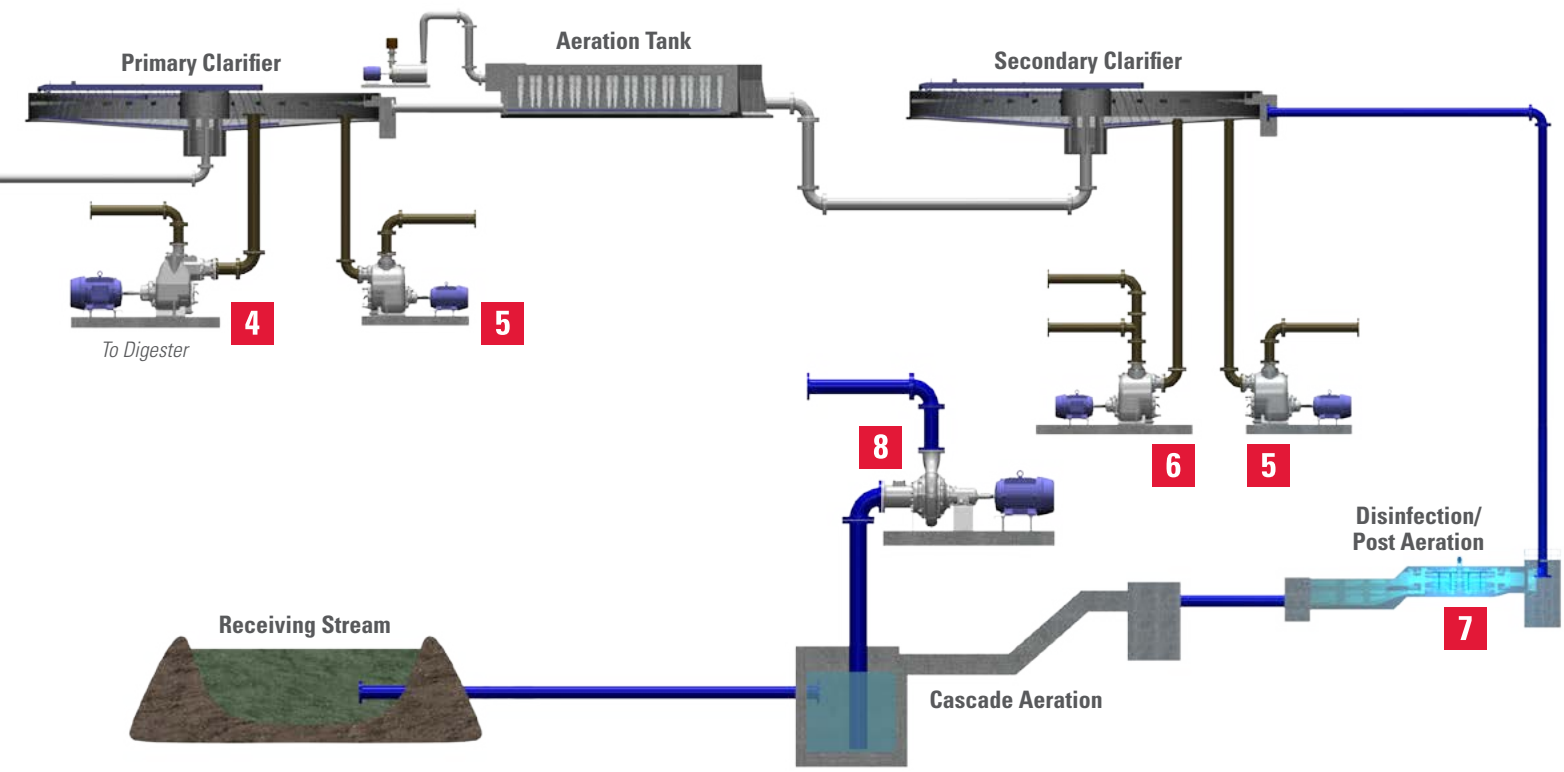

07 | Effluent Pump

- Ultra V Series® Self-Priming Pumps
- Super T Series® Self-Priming Pumps
- 10 Series® Self-Priming Pumps
- Super U Series® Self-Priming Pumps
- 6500 Series® Horizontal End Suction Pumps
- SF Series® Submersible Pumps

08 | Utility Water (Non-Potable) Pumps

- Ultra V Series® Self-Priming Pumps
- Super T Series® Self-Priming Pumps
- 80 Series® Self-Priming Pumps
- Super U Series® Self-Priming Pumps
- VG & VGH Series Standard Centrifugal Pumps
- 6500 Series® Horizontal End Suction Pumps

09 | Supernatant Recirculation Pump

- Ultra V Series® Self-Priming Pumps
- Super T Series® Self-Priming Pumps
- 6500 Series® Horizontal End Suction Pumps

10 | Dewatering Feed Pump

- Ultra V Series® Self-Priming Pumps
- Super T Series® Self-Priming Pumps
- 6500 Series® Horizontal End Suction Pumps

11 | Sludge Loading Pump

- Ultra V Series® Self-Priming Pumps
- Super T Series® Self-Priming Pumps
- 6500 Series® Horizontal End Suction Pumps

NOTE: *Gorman-Rupp recognizes that the above treatment plant diagram will not apply for all municipalities and is meant for illustrative purposes only.*



80 Series® utility water pumps

WASTEWATER TREATMENT SOLUTIONS DESIGNED WITH YOUR NEEDS IN MIND



★ Manufacturing Facilities
● Distribution Centers

Gorman-Rupp USA
Mansfield, Ohio, USA

Gorman-Rupp Canada
St. Thomas, Ontario, Canada

Gorman-Rupp Europe
Culemborg, Netherlands
Namur, Belgium

Gorman-Rupp Africa
Cape Town, South Africa
Durban, South Africa
Johannesburg, South Africa (Headquarters)

Distribution Centers
Dubai, United Arab Emirates
Grand Prairie, Texas, USA
Culemborg, Netherlands

Gorman-Rupp offers the expertise, the facilities, the proven equipment and the industry-leading product support to meet all your municipal pumping needs. For wastewater-handling systems that deliver maximum value and require minimal service, contact the experts at Gorman-Rupp today.

ISO 9001:2008 REGISTERED COMPANY
GORMAN-RUPP PUMPS USA

ISO 14001:2004 REGISTERED COMPANY
GORMAN-RUPP PUMPS USA

GORMAN-RUPP PUMPS
P.O. BOX 1217
MANSFIELD, OHIO 44901-1217 | USA
TEL: 419.755.1011 | FAX: 419.755.1251

GRPUMPS.COM

GORMAN-RUPP PUMPS
The Pump People®

AV-06666-REV072016

Product information is subject to change; consult factory for details. ©2015-2016 The Gorman-Rupp Company. All rights reserved. Printed in the USA

Gorman-Rupp Company

Approval Required

Submittal Data

Station Serial No.:

19-269-LEPB

Station Location:

Willis, TX

Willis WWTP Non-Potable Station

Gorman-Rupp Representative:

Precision Pump Systems
Attention: Chris Currence
3303 Cypresswood Drive
Spring, TX 77388

Telephone: 713.783.8530

Table of Contents

Submittal Data Cover Page.....1
Engineering Order 3
Pump Curve 12
U3B60S-B Specification Data Sheet 13
U3B60S-B Installation, Operation, and Maintenance Manual.....17
Single and Multiple Pump Lift Station Less Enclosure Installation Manual 58
Mechanical Drawing 69
Electrical Drawing 70
Gorman-Rupp Warranty 73

Serial No. 19-269-LEPB

ENGINEERING ORDER

Date: 1/30/19 CF
Revisions:

GORMAN-RUPP ENGINEERED SYSTEMS EQUIPMENT

STATION DESCRIPTION.....	BASE MOUNTED DUPLEX PUMPING STATION WITH LIQUID LEVEL CONTROLS
STATION LOCATION	WILLIS, TX WILLIS WWTP NON-POTABLE STATION WILLIS, TEXAS 77318
ENGINEER.....	BLYEL ENGINEERING CONROE , TEXAS 77301
OWNER	CITY OF WILLIS WILLIS, TEXAS 77318
CONTRACTOR.....	R.P. CONSTRUCTORS, INC. 9455 IH 35 NORTH NEW BRAUNFELS, TX 78130
GORMAN-RUPP REPRESENTATIVE	PRECISION PUMP SYSTEMS

Serial No. 19-269-LEPB

ENGINEERING ORDER

Date: 1/30/19 CF
Revisions:

GORMAN-RUPP ENGINEERED SYSTEMS EQUIPMENT

STATION DATA

EQUIPMENT OUTLINE DWG. NO: 60-1672 (19-269-LEPB)

The base mounted station consists of a package pumping station, fully tested, and assembled on a steel LEM style base.

The unit base will comprise a base plate, perimeter flange, and reinforcements. Base plate will be fabricated of steel not less than 1/4" thick. Perimeter flange and reinforcements will be designed to prevent flexing or warping under operating conditions. Base plate and/or flanges will be drilled for hardware used to secure unit base to concrete pad. Unit base will contain provisions for lifting the complete pump unit during shipping and handling.

FOR UNIT MODIFICATIONS & OPTIONS, REFER TO SECTION TITLED: MODIFICATIONS & OPTIONS

PIPING AND VALVE DATA

SUCTION:

3 Inch - Spool flanged customer connection, drilled to standard 125# template

DISCHARGE:

4 Inch - Swing check valve, as shown on station outline drawing.
4 Inch - non-lubricated, taper type, flanged **2- way plug valves** providing drip tight shutoff.
4 Inch flanged customer connection, drilled to standard 125# flanged template.

Discharge location as viewed from the shaft end of the pump will be: .....Center

FOR PIPING/VALVE MODIFICATIONS & OPTIONS, REFER TO SECTION TITLED: MODIFICATIONS & OPTIONS

Serial No. 19-269-LEPB

ENGINEERING ORDER

Date: 1/30/19 CF
Revisions:

GORMAN-RUPP ENGINEERED SYSTEMS EQUIPMENT

PUMP DATA

PUMP PERFORMANCE APPLIES TO EACH PUMP EXCEPT WHERE NOTED:

Design Characteristics (G.P.M. @ T.D.H.): ..... 120 @ 140'
Priming Lift: ..... 5'
Static Lift: ..... 6'
Total Dynamic Suction Lift: ..... 26'
N.P.S.H. Required: ..... 3.5'
Excess N.P.S.H. Available, With 1.0' Safety Factor: ..... 2.31'
Pump Model No.: ..... U3B60S-B /WW
Quantity of Pumps: 2
Impeller Diameter: ..... 11"
Impeller Speed: ..... 1785 RPM

MOTOR NAME PLATE DATA

PUMP MOTOR DATA APPLIES TO EACH PUMP MOTOR EXCEPT WHERE NOTED:

Horsepower: 15
Motor Wired: Phase/Hertz/Volts: 3/60/460
Service Factor: 1.25
Locked Rotor Code: ..... G
Frame Size: 254T
Enclosure Type: ..... TEFC
Insulation Class: ..... F
Manufacturer: ..... WEG
Ambient Rating: ..... 40°C
Motor Qty: 1

Note: A supplement sheet will be provided in the O&M Manual with the following data:

Pump S/N's	Motor Full Load Amps
Motor S/N's	Motor Overload Heater Elements
Motor Full Load R.P.M.	Engine S/N (When Applicable)

FOR PUMP/MOTOR MODIFICATIONS & OPTIONS, REFER TO SECTION TITLED: MODIFICATIONS & OPTIONS

Serial No. 19-269-LEPB

ENGINEERING ORDER

Date: 1/30/19 CF
Revisions:

GORMAN-RUPP ENGINEERED SYSTEMS EQUIPMENT

V - BELT DRIVE DATA

V-BELT DRIVE DATA APPLIES TO EACH PUMP MOTOR EXCEPT WHERE NOTED:

Motor Speed @ 64% Load: ..... 1785 RPM
Required Pump Speed:..... 1785 RPM
Speed Ratio @ 64% Load:.....1
Theoretical H.P Per Belt:.....28.60
Arc Correction Factor:.....0.91
Corrected H.P. Per Belt:.....26.03
Number of Belts:.....2
Total H.P. Developed:.....52.05
Pump Brake H.P. Required:.....9.6
Safety Factor:.....5.42
Center Line Distance: ..... 21.20"
Pump V-Belts:..... 5VX710
Drive Manufacturer:.....DODGE

PUMP SHEAVE DATA:
Section: 5V
Diameter: .....9"
Groove: 2
Bushing No.:..... 2517
Bore: ..... 1-1/2"
Key: ..... 3/8"

MOTOR SHEAVE DATA:
Section: 5V
Diameter: .....9.25"
Groove: 2
Bushing No.:..... 3020
Bore: ..... 1-5/8"
Key: ..... 3/8"

Corrected H.P. Per Belt = Theoretical H.P. Per Belt x Arc Correction Factor
Total H.P. Developed = Corrected H.P. Per Belt x Number of Belts
Safety Factor = Total H.P. Developed ÷ Pump Brake H.P. Required
Safety Factor to be 1.5 or Larger.

$$\text{Pump Brake H.P.} = \frac{\text{Flow x T.D.H. x S.G.}}{\text{3960 x Pump Eff.}}$$

Serial No. 19-269-LEPB

ENGINEERING ORDER

Date: 1/30/19 CF
Revisions:

GORMAN-RUPP ENGINEERED SYSTEMS EQUIPMENT

ELECTRICAL DATA & EQUIPMENT SCHEDULE

ELECTRICAL SCHEMATIC DWG. D4-14874

Service Available: ..... 3/60/480, 4 Wire
Power Transformer: 3KVA
Power & Level Control Electrical Enclosure: ..... NEMA 4X Stainless Steel, 48" High x 36" Wide x 16" Deep
Control Panel Mounting Method ..... Base Mounted
Minimum Main Conductor (480V): 25AMPS
Control Panel Short Circuit Rating: ..... 10kA rms sym

BRANCH CIRCUIT PROTECTION APPLIES TO EACH PUMP MOTOR, EXCEPT WHERE NOTED:

BRANCH CIRCUIT PROTECTION						
CIRCUIT	**PH/VOLTS**	**TYPE**	**TRIP**	**RMS INTER. CAP**	**MFG.**	**MFG. No.**
Pump Motor	3/60/480	C/B	50	25,000	A-B	140G-H2C3-C50
Control	1/60/120	C/B	15	10,000	A-B	1492-MCAA115
Trans Primary	1/60/480	C/B	15	25,000	A-B	140U-H2C3-C15
Trans Sec.	1/60/120	C/B	30	10,000	A-B	1492-MCAA130
Receptacle	1/60/120	C/B	15	10,000	A-B	1492-MCAA115
STARTERS						
CIRCUIT	**TYPE**		**SIZE**		**MFG.**	**MFG. No.**
Pump Motor	FVNR		#2		A-B	509-COD-A2J
CONDUCTORS						
CIRCUIT	**AWG SIZE**		**INSULATION**		**GROUND**	**CONDUIT SIZE**
Pump Motor	#10		THW		#10	1-1/2"

FOR ELECTRICAL MODIFICATIONS & OPTIONS, REFER TO SECTION TITLED: MODIFICATIONS & OPTIONS

Serial No. 19-269-LEPB

ENGINEERING ORDER

Date: 1/30/19 CF
Revisions:

GORMAN-RUPP ENGINEERED SYSTEMS EQUIPMENT

PRESSURE CONTROL SYSTEM

TYPE: Relay / Pressure switch.

CONTROLLER: Pressure control system will be the pressure switch type. Rising and falling pressure causes pressure switch to open and close, providing start and stop signals for the pressure control equipment.

RELATED EQUIPMENT: (1) Square D pressure switch, each with mounting hardware, and conduit seal.
(1) Allen-Bradley pressure switch for High Discharge Pressure

LIQUID LEVEL CONTROL SET POINTS & OPERATION				
CONTROL	**ACTION**	**CONTROL FUNCTION**	**ON PRESSURE**	**OFF PRESSURE**
Pressure Switch	Close	Lead Pump	40 PSI	60 PSI
Pressure Switch & Timer	Close	Lag Pump	40 PSI	60 PSI
Pressure Switch	Open	High Discharge Pressure Alarm	70 PSI	50 PSI

[Pumps to start at low pressure 90’ TDH, and Stop at High Pressure 134’ TDH]

HIGH DISCHARGE PRESSURE SHUTDOWN: Control equipped to shut down equipment when the discharge exceeds a field adjustable setpoint. The pump(s) will re-start upon pressure lowering to the field adjustable setpoint, the alarm will be maintained until manually re-set. Dry alarm contact wired to terminal blocks will be provided for the alarm circuit.

ALARM SILENCE: Permits silencing of the external alarm device during corrective action(s). After silencing the alarm, manual reset of the alarm relay provides automatic reset of the alarm silence circuit.

SEQUENCE OF OPERATION: Station to run based off discharge pressure. When the discharge pressure reaches a field adjustable low-pressure setpoint, the pressure switches will start a pump. When the discharge pressure reaches a field adjustable setpoint, the pressure switches will stop the pumps. The station will be feeding a customer supplied bladder tank for reuse water at the WWTP.

FOR LEVEL CONTROL MODIFICATIONS & OPTIONS, REFER TO SECTION TITLED: MODIFICATIONS & OPTIONS

Serial No. 19-269-LEPB

ENGINEERING ORDER

Date: 1/30/19 CF
Revisions:

GORMAN-RUPP ENGINEERED SYSTEMS EQUIPMENT

STANDARD FEATURES

AIR RELEASE VALVE ASSEMBLY: Automatic air release valve installed on each pump. Valve is open during priming or repriming cycle. Closes automatically to eliminate recirculation of liquid to wet well after pump is delivering full capacity. Air release valves to be G-R Model No. GRP33-07A. *(Supplied with stainless steel fittings.)*

ALTERNATOR RELAY: Alternately selects each pump to be lead pump, causing equal wear. Contacts transfer, alternating the pumps before the next pumping cycle.

PUMP SEQUENCE SELECTOR SWITCH: Three position selector switch provides for automatic alternation or manual selection of lead pump.

HAND-OFF-AUTO SWITCH: Controls the mode of operation for each pump supplied. Pump runs continuously when placed in the hand mode, until it is manually switched to the off position. The auto mode allows the pumps to be controlled by the pressure control switches.

HIGH PUMP TEMPERATURE PROTECTION: Circuitry provided to override the level control system and shut down the pump motors to protect the pump from excessive temperature. If the pump temperature rises to a level which could cause pump damage, a thermostat will cause a magnetic switch to drop out the motor starter. A visible indicator located on front of the control panel will indicate a high temperature condition. The pump will remain locked out until the pump has cooled and the circuit has been manually reset. Dry alarm contacts wired to terminal blocks will be provided for the high pump temperature shut down alarm circuit for each pump.

PUMP RUN LIGHTS: A pilot light is supplied for each pump motor. Each light is wired in parallel with the related pump motor starter to indicate when the motor is running.

ELAPSED TIME INDICATOR: A six digit, non-resettable totalizer is connected to each motor starter to indicate the total running time in “hours” and “tenths” of hours.

GFI RECEPTACLE: Duplex GFI utility receptacle providing 115 volt, AC, will be provided. Receptacle will be protected by a 15 amp thermal-magnetic circuit breaker.

THREE PHASE VOLTAGE MONITOR: Voltage monitor will be wired to stop pump motors in the event of any of the following: Low Voltage, Voltage Unbalance, Phase Loss, and Phase Reversal. Power to pumps will automatically be restored upon return to normal power conditions.

MOTOR STARTERS: An open frame, across-the-line, NEMA rated starter will be furnished for each pump motor. The starters will provide under-voltage release and over-load protection on all phases.

MOTOR OVERLOAD RESETTER: An overload reset pushbutton mounted through the control panel door, permits resetting of each motor overload relay without opening the control panel door.

FOR MODIFICATIONS/OPTIONS, REFER TO SECTION TITLED: MODIFICATIONS AND OPTIONS

Serial No. 19-269-LEPB

ENGINEERING ORDER

Date: 1/30/19 CF
Revisions:

GORMAN-RUPP ENGINEERED SYSTEMS EQUIPMENT

MODIFICATIONS & OPTIONS

SUCTION AND DISCHARGE GAUGES: Consists of a resilient mounted panel with a 4" diameter glycerin filled "no shock" pressure gauge graduated 0-230' WC and a 4" diameter glycerin filled "no shock" compound gauge graduated -34'-34' WC for each pump, with shut off valves and fittings. *(Supplied with stainless steel fittings.)*

SPARE PARTS KIT: Cover plate O-Ring(s) — One mechanical seal
Rotating assembly O-Ring(s) — One set impeller clearance adjustment spacers

PANEL HEATER: A panel heater with an adjustable thermostat will be supplied to reduce humidity within the control panel.

TRANSIENT VOLTAGE SURGE SUPPRESSOR: A transient voltage surge suppressor will be furnished to protect equipment from induced lightning and/or power surges.

LED ALARM LIGHT (LOOSE): 115V, AC, Weatherproof LED light with shatter resistant red Fresnel lens and outlet box, shipped loose suitable for field mounting.

ALARM HORN (LOOSE): 115V, AC, Weatherproof horn on conduit box with mounting lugs, shipped loose for field mounting.

ARV ISOLATION BALL VALVES: Stainless steel ball valves provided for manual isolation of the automatic air release valves.

Serial No. 19-269-LEPB

ENGINEERING ORDER

Date: 1/30/19 CF
Revisions:

GORMAN-RUPP ENGINEERED SYSTEMS EQUIPMENT

ReliaSource®

ReliaSource®: Lift station meets the requirements of being 100% custom-engineered, manufactured, assembled, and factory pretested by The Gorman-Rupp Company, thereby qualifying it for a 60 month limited warranty.

non potable pumps

PERFORMANCE CURVE

REPRIMING LIFTS				
RPM	2150-1750	1450	1150	850
FEET	23	13	9	7
METERS	7	4	2,7	2,1

.81"/[20,6] DIA. MAX. SPHERICAL SOLIDS

VOLUTE 38222-433 CURVE U3B-B-1

IMPELLER 38619-015 MODEL U3B-B

SIZE 3"X3" IMP.DIA. 11"

SP.GR. 1.0 RPM VARIOUS

Note:
Select performance within operating range of curve.

120 GPM @ 140' TDH
1785 RPM
9.5 BHP
44.65% Eff.
3.5' NPSHr.

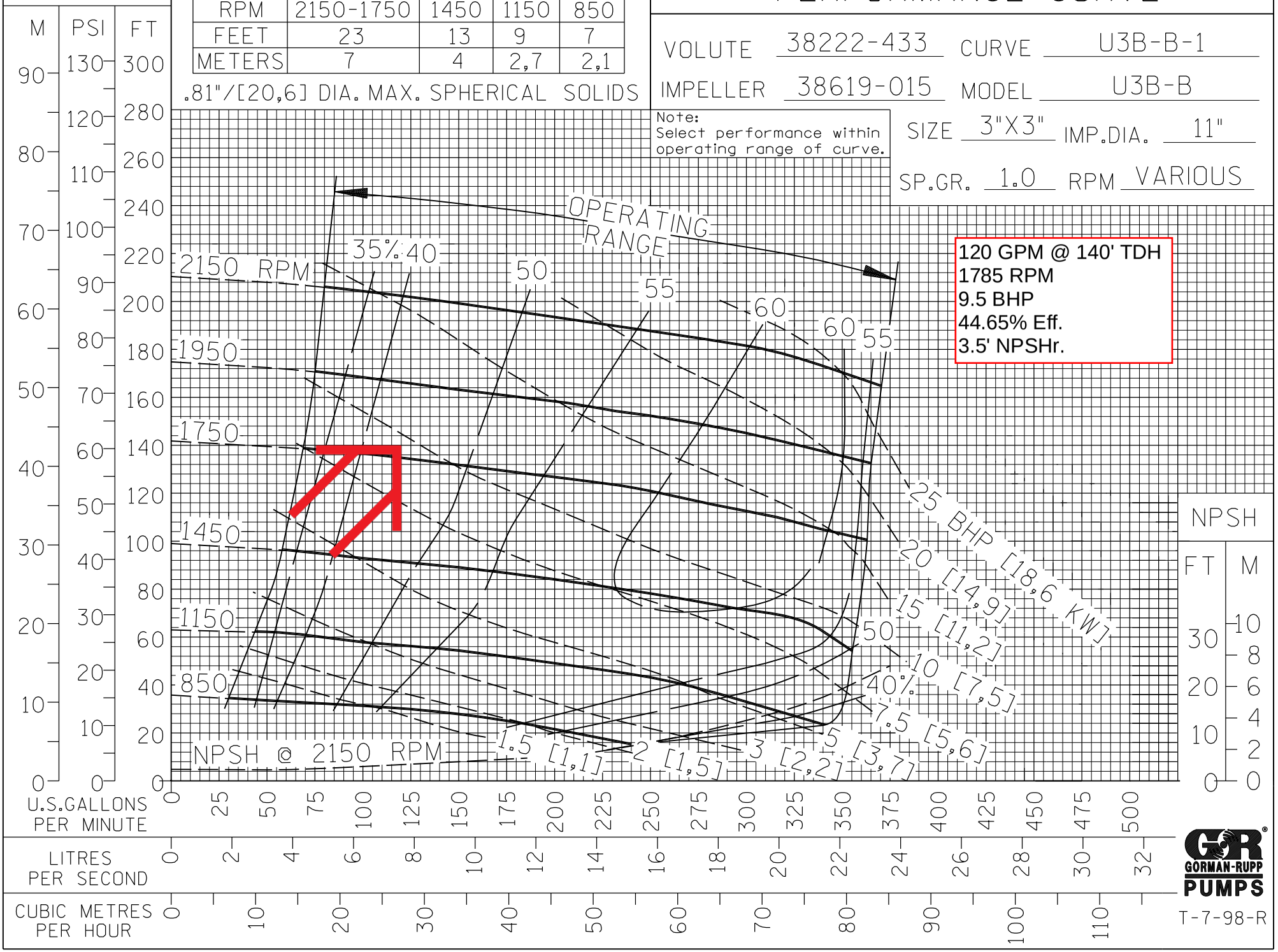

GORMAN-RUPP PUMPS

T-7-98-R

FILE NO.U3BB.S01

CDS

Self Priming Centrifugal Pump

Super U SERIES

Model U3B60S-B
Size 3" x 3"

FIVE-YEAR WARRANTY

PUMP SPECIFICATIONS

Size: 3" x 3" (76 mm x 76 mm) NPT - Female.
Casing: Gray Iron 30.
Maximum Operating Pressure 137 psi (945 kPa).*
Semi-Open Type, Six Vane Impeller: Ductile Iron 60-40-18.
Handles 13/16" (20,6 mm) Diameter Spherical Solids.
Impeller Shaft: Alloy Steel 4150.
Replaceable Wear Plate: Gray Iron 30.
Removable Adjustable Cover Plate: Gray Iron 30; 48 lbs. (22 kg).
Bearing Housing: Gray Iron 30.
Seal Plate: Gray Iron 30.
Shaft Sleeve: Alloy Steel 4130.
Flap Valve: Neoprene w/Nylon and Steel Reinforcing.
Radial Bearing: Open Single Row Ball.
Thrust Bearing: Open Double Row Ball.
Bearing and Seal Cavity Lubrication: SAE 30 Non-Detergent Oil.
Flanges: 125# Gray Iron 30.
Gaskets: Cork, Rubber, Vegetable Fiber, PTFE, Buna-N w/Compressed Synthetic Fibers.
O-Rings: Buna-N.
Hardware: Standard Plated Steel.
Brass Pressure Relief Valve.
Bearing and Seal Cavity Oil Level Sight Gauges.
Optional Equipment: Stainless Steel 316 Pressure Relief Valve. G-R Hard Iron Impeller, Seal Plate and Wear Plate. Automatic Air Release Valve. 120V/240V Casing Heater. High Pump Temperature Shutdown Kit. Permalon, Kalrez or Fluorocarbon Metal Bellows Seals. Stainless Steel Cartridge Seal. Gray Iron 30 Suction and Discharge Spool Flanges:
3" ASA **(Specify Model U3B60S-B /F)**.
80 mm DIN 2527 (PN 16). **(Specify Model U3B60S-B /FM)**.

**Consult Factory for Applications Exceeding Maximum Pressure and/or Temperature Indicated.*



Shown w/Optional Spool Flanges

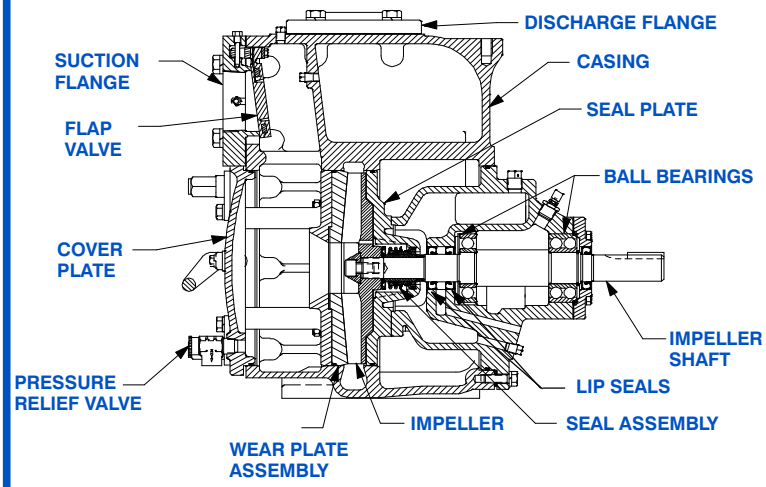

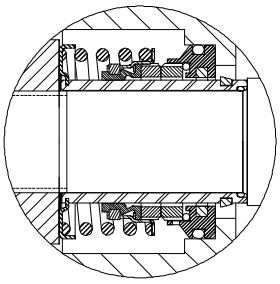

SEAL DETAILS

Cartridge Type, Mechanical, Oil-Lubricated, Double Floating, Self-Aligning. Silicon Carbide Rotating and Stationary Faces. Stainless Steel 316 Stationary Seat. Fluorocarbon Elastomers (DuPont Viton® or Equivalent). Stainless Steel 18-8 Cage and Spring. Maximum Temperature of Liquid Pumped, 160°F (71°C).*

© Copyright by The Gorman-Rupp Company 2011

Specification Data	APPROXIMATE DIMENSIONS and WEIGHTS	NET WEIGHT: 490 LBS. (222 KG.)
SECTION 50, PAGE 2710		SHIPPING WEIGHT: 515 LBS. (234 KG.)
		EXPORT CRATE: 14 CU. FT. (0,4 CU. M.)

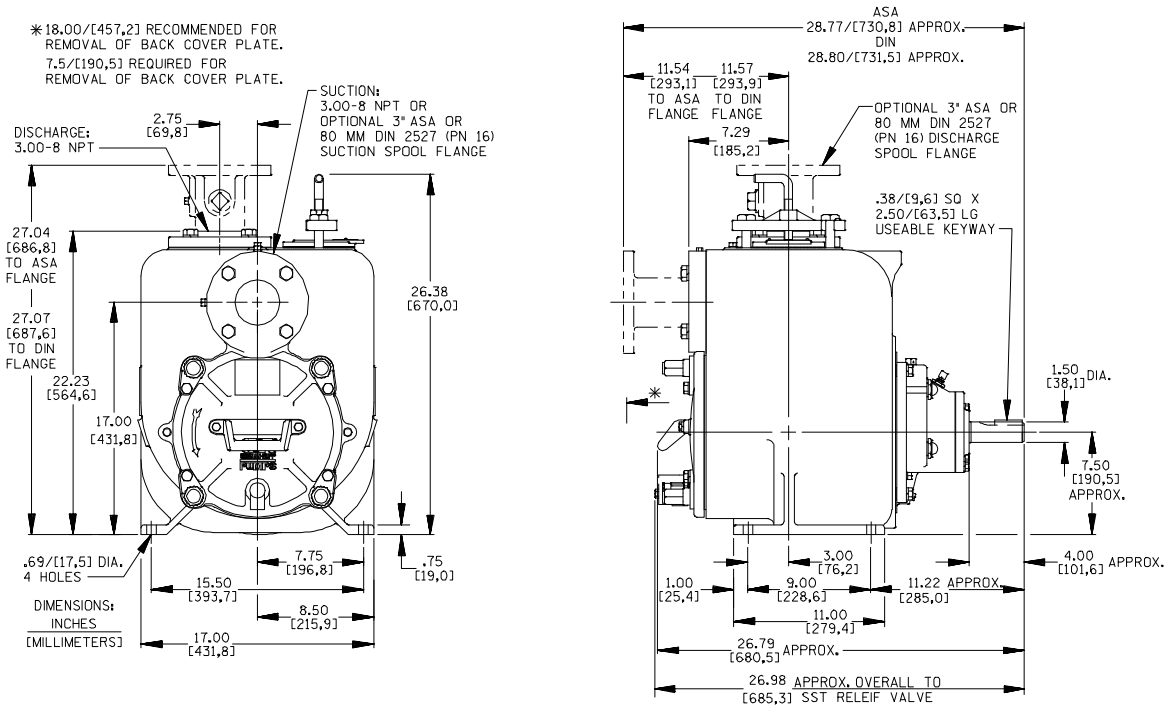

NOTE: OPTIONAL ASA OR DIN STANDARD SPOOL FLANGES AVAILABLE

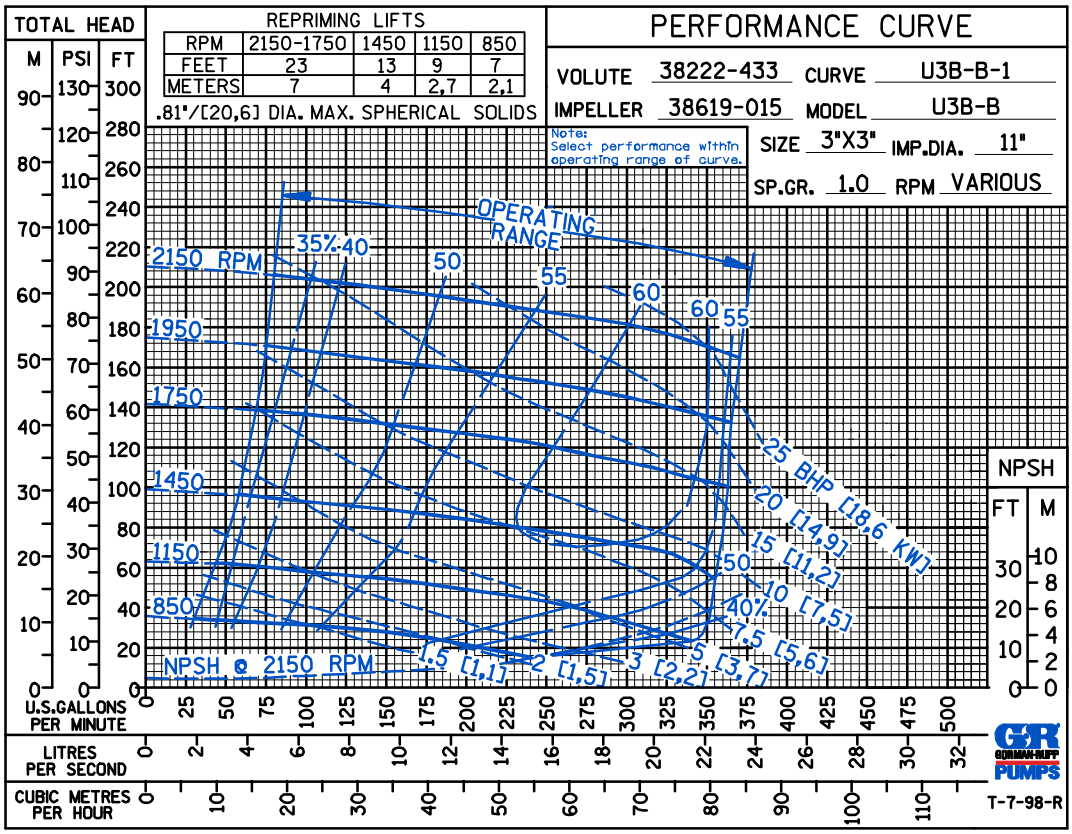

THE GORMAN-RUPP COMPANY ● MANSFIELD, OHIO

GORMAN-RUPP OF CANADA LIMITED ● ST. THOMAS, ONTARIO, CANADA

Specifications Subject to Change Without Notice

Printed in U.S.A.

© Copyright by The Gorman-Rupp Company 2011

C D S

PERFORMANCE BASED ON WATER

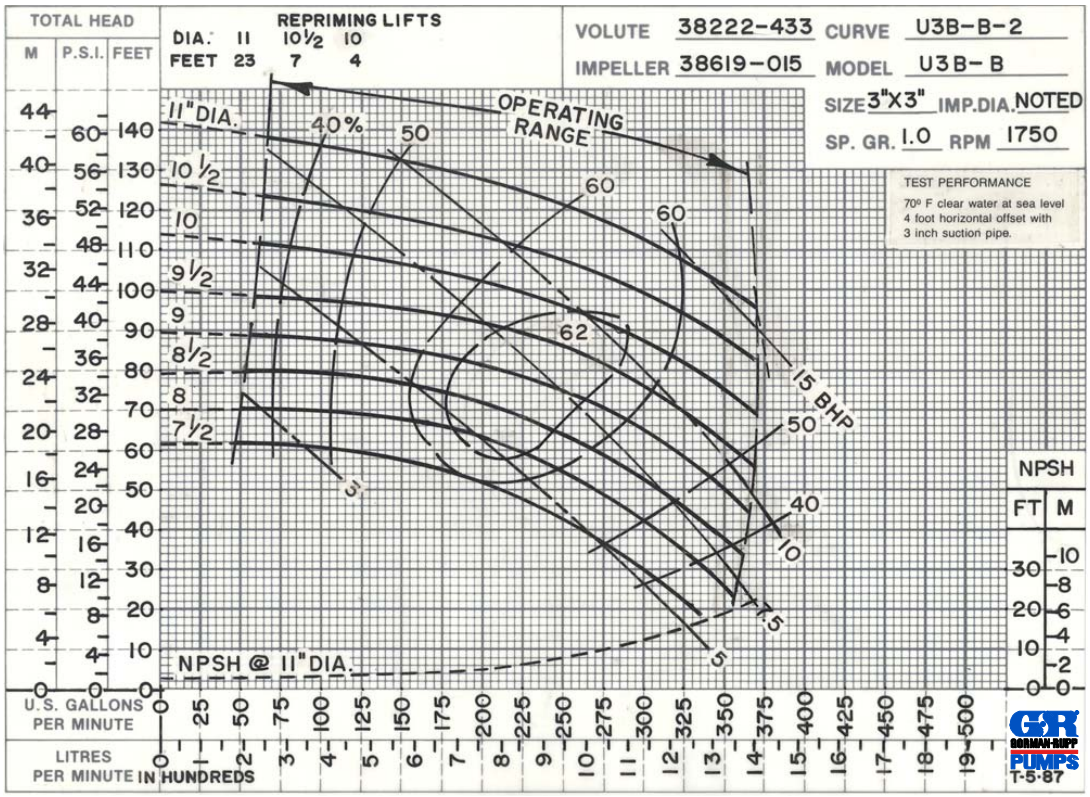

50 HERTZ PERFORMANCE BASED ON WATER

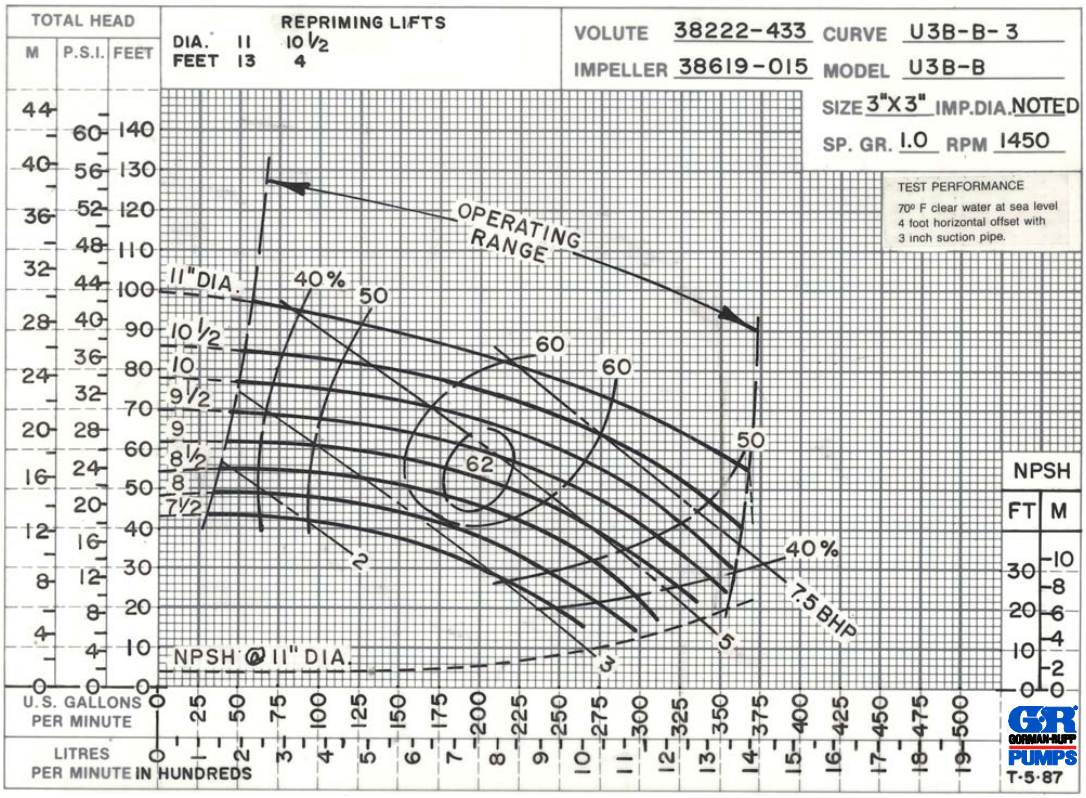

© Copyright by The Gorman-Rupp Company 2011

C D S

PERFORMANCE BASED ON WATER

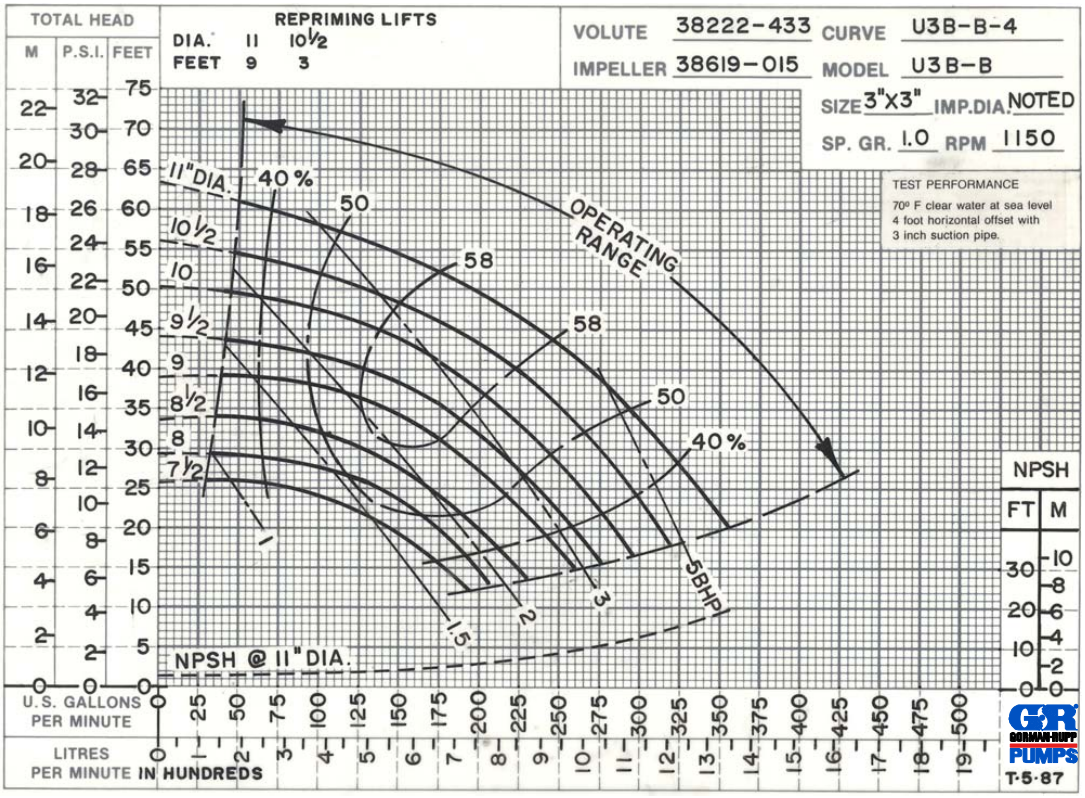

© Copyright by The Gorman-Rupp Company 2011

non potable pumps

OM—05663—01
June 11, 2004
Rev. G 04-29-15

INSTALLATION, OPERATION, AND MAINTENANCE MANUAL

WITH PARTS LIST

GORMAN-RUPP PUMPS

SUPER U SERIES® PUMPS

MODELS

U3B60S-B

INCLUDING: /F, /FM, /WW

GORMAN-RUPP PUMPS

www.grpumps.com

©2004 Gorman-Rupp Pumps

Printed in U.S.A.

Register your new
Gorman-Rupp pump online at
www.grpumps.com

Valid serial number and e-mail address required.

RECORD YOUR PUMP MODEL AND SERIAL NUMBER

Please record your pump model and serial number in the spaces provided below. Your Gorman-Rupp distributor needs this information when you require parts or service.

Pump Model: _____

Serial Number: _____

TABLE OF CONTENTS

INTRODUCTION ..... **PAGE I – 1**

SAFETY – SECTION A ..... **PAGE A – 1**

INSTALLATION – SECTION B ..... **PAGE B – 1**

Pump Dimensions ..... PAGE B – 1
PREINSTALLATION INSPECTION ..... PAGE B – 2
POSITIONING PUMP ..... PAGE B – 2
Lifting ..... PAGE B – 2
Mounting ..... PAGE B – 2
Clearance ..... PAGE B – 2
SUCTION AND DISCHARGE PIPING ..... PAGE B – 2
Materials ..... PAGE B – 2
Line Configuration ..... PAGE B – 3
Connections to Pump ..... PAGE B – 3
Gauges ..... PAGE B – 3
SUCTION LINES ..... PAGE B – 3
Fittings ..... PAGE B – 3
Strainers ..... PAGE B – 3
Sealing ..... PAGE B – 3
Suction Lines In Sumps ..... PAGE B – 3
Suction Line Positioning ..... PAGE B – 4
DISCHARGE LINES ..... PAGE B – 4
Siphoning ..... PAGE B – 4
Valves ..... PAGE B – 4
Bypass Lines ..... PAGE B – 5
AUTOMATIC AIR RELEASE VALVE ..... PAGE B – 6
Theory of Operation ..... PAGE B – 6
Air Release Valve Installation ..... PAGE B – 6
ALIGNMENT ..... PAGE B – 7
Coupled Drives ..... PAGE B – 8
V-Belt Drives ..... PAGE B – 8

OPERATION – SECTION C ..... **PAGE C – 1**

PRIMING ..... PAGE C – 1
STARTING ..... PAGE C – 1
Rotation ..... PAGE C – 1
OPERATION ..... PAGE C – 2
Lines With a Bypass ..... PAGE C – 2
Lines Without a Bypass ..... PAGE C – 2
Leakage ..... PAGE C – 2
Liquid Temperature And Overheating ..... PAGE C – 2
Strainer Check ..... PAGE C – 3
Pump Vacuum Check ..... PAGE C – 3
STOPPING ..... PAGE C – 3
Cold Weather Preservation ..... PAGE C – 3
BEARING TEMPERATURE CHECK ..... PAGE C – 3

TABLE OF CONTENTS
(continued)

TROUBLESHOOTING – SECTION D ..... PAGE D – 1

PREVENTIVE MAINTENANCE ..... PAGE D – 3

PUMP MAINTENANCE AND REPAIR – SECTION E ..... PAGE E – 1

PERFORMANCE CURVE ..... PAGE E – 1
PARTS LISTS:
- Pump Model ..... PAGE E – 3
- Repair Rotating Assembly ..... PAGE E – 5

PUMP AND SEAL DISASSEMBLY AND REASSEMBLY ..... PAGE E – 6
- Suction Back Cover And Wear Plate Removal ..... PAGE E – 6
- Rotating Assembly Removal ..... PAGE E – 7
- Impeller Removal ..... PAGE E – 8
- Seal Removal ..... PAGE E – 8
- Shaft and Bearing Removal and Disassembly ..... PAGE E – 8
- Shaft and Bearing Reassembly and Installation ..... PAGE E – 9
- Seal Installation ..... PAGE E – 10
- Impeller Installation ..... PAGE E – 13
- Rotating Assembly Installation ..... PAGE E – 13
- Suction Back Cover Installation And Adjustment ..... PAGE E – 13

PRESSURE RELIEF VALVE MAINTENANCE ..... PAGE E – 14
- Final Pump Assembly ..... PAGE E – 15

LUBRICATION ..... PAGE E – 15
- Seal Assembly ..... PAGE E – 15
- Bearings ..... PAGE E – 15
- Power Source ..... PAGE E – 15

non potable pumps

INTRODUCTION

Thank You for purchasing a Gorman-Rupp pump. **Read this manual** carefully to learn how to safely install and operate your pump. Failure to do so could result in personal injury or damage to the pump.

Because pump installations are seldom identical, this manual cannot possibly provide detailed instructions and precautions for every aspect of each specific application. Therefore, it is the responsibility of the owner/installer of the pump to ensure that applications not addressed in this manual are performed **only** after establishing that neither operator safety nor pump integrity are compromised by the installation. Pumps and related equipment **must** be installed and operated according to all national, local and industry standards.

If there are any questions regarding the pump or its application which are not covered in this manual or in other literature accompanying this unit, please contact your Gorman-Rupp distributor, or The Gorman-Rupp Company:

The Gorman-Rupp Company
P.O. Box 1217
Mansfield, Ohio 44901—1217
Phone: (419) 755—1011
or:
Gorman-Rupp of Canada Limited
70 Burwell Road
St. Thomas, Ontario N5P 3R7
Phone: (519) 631—2870

For information or technical assistance on the power source, contact the power source manufacturer's local dealer or representative.

HAZARD AND INSTRUCTION DEFINITIONS

The following are used to alert maintenance personnel to procedures which require special attention, to those which could damage equipment, and to those which could be dangerous to personnel:

DANGER!

Immediate hazards which WILL result in severe personal injury or death. These instructions describe the procedure required and the injury which will result from failure to follow the procedure.

WARNING!

Hazards or unsafe practices which COULD result in severe personal injury or death. These instructions describe the procedure required and the injury which could result from failure to follow the procedure.

CAUTION

Hazards or unsafe practices which COULD result in minor personal injury or product or property damage. These instructions describe the requirements and the possible damage which could result from failure to follow the procedure.

NOTE

Instructions to aid in installation, operation, and maintenance or which clarify a procedure.

non potable pumps

SAFETY — SECTION A

This information applies to the Super U Series® basic pumps. Gorman-Rupp has no control over or particular knowledge of the power source which will be used. Refer to the manual accompanying the power source before attempting to begin operation.

This manual will alert personnel to known procedures which require special attention, to those which could damage equipment, and to those which could be dangerous to personnel. However, this manual cannot possibly provide detailed instructions and precautions for each specific application or for every situation that might occur during maintenance of the unit. Therefore, it is the responsibility of the owner, installer and/or maintenance personnel to ensure that applications and/or maintenance procedures not addressed in this manual are performed only after establishing that neither personal safety nor pump integrity are compromised by such applications or procedures.

WARNING!

Before attempting to open or service the pump:

1. **Familiarize yourself with this manual.**
2. **Disconnect or lock out the power source to ensure that the pump will remain inoperative.**
3. **Allow the pump to completely cool if overheated.**
4. **Check the temperature before opening any covers, plates, or plugs.**
5. **Close the suction and discharge valves.**
6. **Vent the pump slowly and cautiously.**
7. **Drain the pump.**

WARNING!

This pump is designed to handle most non-volatile, non-flammable liquids containing specified entrained solids. Do not attempt to pump volatile, corrosive, or flammable materials which may damage the pump or endanger personnel as a result of pump failure.

WARNING!

After the pump has been positioned, make certain that the pump and all piping connections are tight, properly supported and secure before operation.

WARNING!

Do not operate the pump without the guards in place over the rotating parts. Exposed rotating parts can catch clothing, fingers, or tools, causing severe injury to personnel.

WARNING!

Do not remove plates, covers, gauges, pipe plugs, or fittings from an overheated pump. Vapor pressure within the pump can cause parts being disengaged to be ejected with great force. Allow the pump to cool before servicing.

WARNING!

Do not operate the pump against a closed discharge valve for long periods of time. If operated against a closed dis-

non potable pumps

charge valve, pump components will deteriorate, and the liquid could come to a boil, build pressure, and cause the pump casing to rupture or explode.



Death or serious personal injury and damage to the pump or components can occur if proper lifting procedures are not observed. Make certain that hoists, chains, slings or cables are in good working condition and of sufficient capacity and that they are positioned so that loads will be balanced and the pump or components will not be damaged when lifting. Suction and discharge hoses and piping must be removed from the pump before lifting. Lift the pump or component only as high as necessary and keep personnel away from suspended objects.

non potable pumps

INSTALLATION — SECTION B

Review all SAFETY information in Section A.

Since pump installations are seldom identical, this section offers only general recommendations and practices required to inspect, position, and arrange the pump and piping.

Most of the information pertains to a standard **static lift application** where the pump is positioned above the free level of liquid to be pumped.

If installed in a **flooded suction application** where the liquid is supplied to the pump under pressure, some of the information such as mounting, line configuration, and priming must be tailored to the specific application. Since the pressure supplied to the pump is critical to performance and safety, **be sure** to limit the incoming pressure to **50%** of the maximum permissible operating pressure as shown on the pump performance curve.

For further assistance, contact your Gorman-Rupp distributor or the Gorman-Rupp Company.

Pump Dimensions

See Figure 1 for the approximate physical dimensions of this pump.

OUTLINE DRAWING

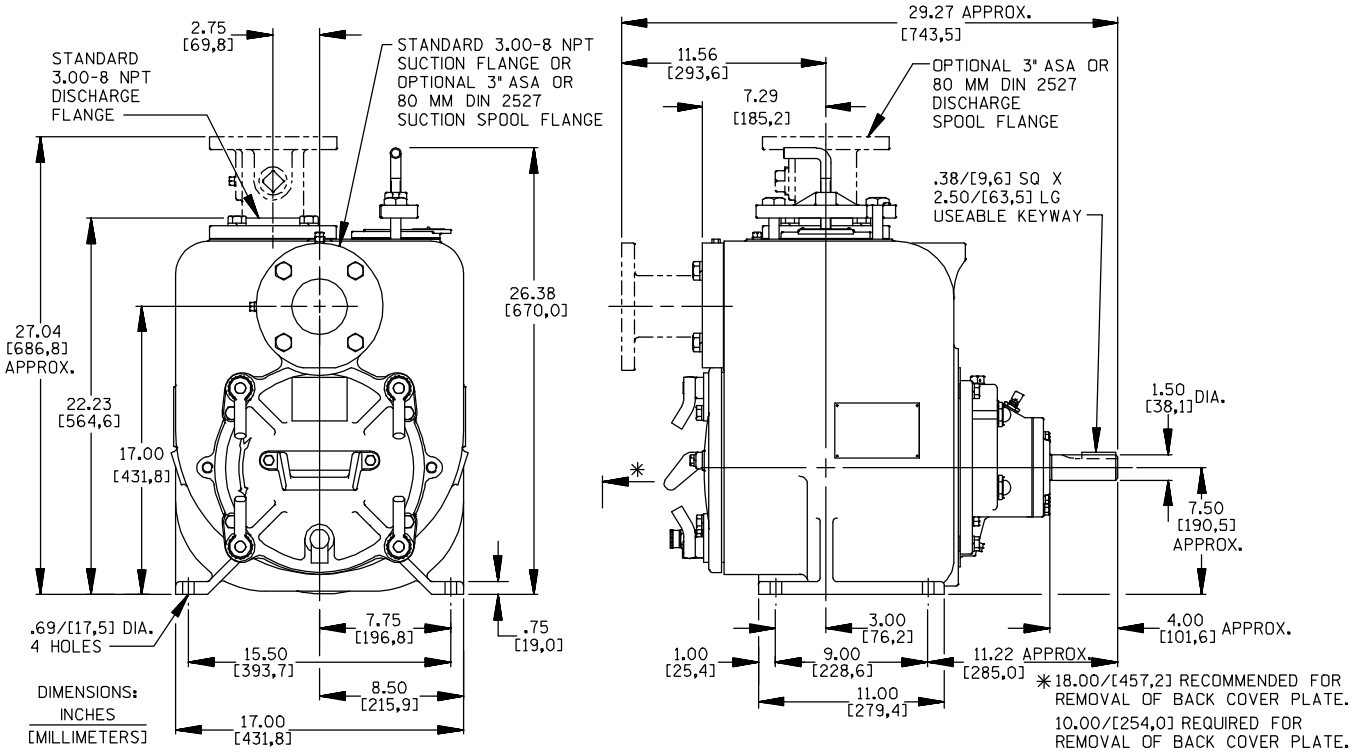

NOTE: OPTIONAL ASA OR DIN STANDARD SUCTION & DISCHARGE SPOOL FLANGES AVAILABLE

Figure 1. Pump Model U3B60S-B, Including /F, /FM, /WW

non potable pumps

PREINSTALLATION INSPECTION

The pump assembly was inspected and tested before shipment from the factory. Before installation, inspect the pump for damage which may have occurred during shipment. Check as follows:

a. Inspect the pump for cracks, dents, damaged threads, and other obvious damage.

b. Check for and tighten loose attaching hardware. Since gaskets tend to shrink after drying, check for loose hardware at mating surfaces.

c. Carefully read all warnings and cautions contained in this manual or affixed to the pump, and perform all duties indicated. Note the direction of rotation indicated on the pump. Check that the pump shaft rotates counterclockwise when facing the impeller.

CAUTION

Only operate this pump in the direction indicated by the arrow on the pump body and on the accompanying decal. Refer to **ROTATION** in **OPERATION**, Section C.

d. Check levels and lubricate as necessary. Refer to **LUBRICATION** in the **MAINTENANCE AND REPAIR** section of this manual and perform duties as instructed.

e. If the pump and power source have been stored for more than 12 months, some of the components or lubricants may have exceeded their maximum shelf life. These **must be inspected or replaced** to ensure maximum pump service.

If the maximum shelf life has been exceeded, or if anything appears to be abnormal, contact your Gorman-Rupp distributor or the factory to determine the repair or updating policy. **Do not** put the pump into service until appropriate action has been taken.

POSITIONING PUMP

WARNING!

Death or serious personal injury and damage to the pump or components can occur if proper lifting procedures are not observed. Make certain that hoists, chains, slings or cables are in good working condition and of sufficient capacity and that they are positioned so that loads will be balanced and the pump or components will not be damaged when lifting. Suction and discharge hoses and piping must be removed from the pump before lifting. Lift the pump or component only as high as necessary and keep personnel away from suspended objects.

Lifting

Pump unit weights will vary depending on the mounting and drive provided. Check the shipping tag on the unit packaging for the actual weight, and use lifting equipment with appropriate capacity. Drain the pump and remove all customer-installed equipment such as suction and discharge hoses or piping before attempting to lift existing, installed units.

Mounting

Locate the pump in an accessible place as close as practical to the liquid being pumped. Level mounting is essential for proper operation.

The pump may have to be supported or shimmed to provide for level operation or to eliminate vibration.

Clearance

It is recommended that **18 inches (457 mm)** of clearance be provided in front of the back cover to permit removal of the cover and easy access to the pump interior. A **minimum** clearance of **10 inches**

non potable pumps

(254 mm) must be maintained to permit removal of the cover.

SUCTION AND DISCHARGE PIPING

Pump performance is adversely effected by increased suction lift, discharge elevation, and friction losses. See the performance curve and operating range shown on Page E-1 to be sure your overall application allows pump to operate within the safe operation range.

Materials

Either pipe or hose maybe used for suction and discharge lines; however, the materials must be compatible with the liquid being pumped. If hose is used in suction lines, it must be the rigid-wall, reinforced type to prevent collapse under suction. Using piping couplings in suction lines is not recommended.

Line Configuration

Keep suction and discharge lines as straight as possible to minimize friction losses. Make minimum use of elbows and fittings, which substantially increase friction loss. If elbows are necessary, use the long-radius type to minimize friction loss.

Connections to Pump

Before tightening a connecting flange, align it exactly with the pump port. Never pull a pipe line into place by tightening the flange bolts and/or couplings.

Lines near the pump must be independently supported to avoid strain on the pump which could cause excessive vibration, decreased bearing life, and increased shaft and seal wear. If hose-type lines are used, they should have adequate support to secure them when filled with liquid and under pressure.

Gauges

Most pumps are drilled and tapped for installing discharge pressure and vacuum suction gauges. If these gauges are desired for pumps that are not tapped, drill and tap the suction and discharge lines not less than 18 inches (457,2 mm) from the suction and discharge ports and install the lines. Installation closer to the pump may result in erratic readings.

SUCTION LINES

To avoid air pockets which could affect pump priming, the suction line must be as short and direct as possible. When operation involves a suction lift, the line must always slope upward to the pump from the source of the liquid being pumped; if the line slopes down to the pump at any point along the suction run, air pockets will be created.

Fittings

Suction lines should be the same size as the pump inlet. If reducers are used in suction lines, they should be the eccentric type, and should be installed with the flat part of the reducers uppermost to avoid creating air pockets. Valves are not normally used in suction lines, but if a valve is used, install it with the stem horizontal to avoid air pockets.

Strainers

If a strainer is furnished with the pump, be certain to use it; any spherical solids which pass through a strainer furnished with the pump will also pass through the pump itself.

If a strainer is not furnished with the pump, but is installed by the pump user, make certain that the total area of the openings in the strainer is at least three or four times the cross section of the suction line, and that the openings will not permit passage of solids larger than the solids handling capability of the pump.

This pump is designed to handle up to 13/16-inch (20,6 mm) diameter spherical solids.

Sealing

Since even a slight leak will affect priming, head, and capacity, especially when operating with a high suction lift, all connections in the suction line should be sealed with pipe dope to ensure an air-

non potable pumps

tight seal. Follow the sealant manufacturer's recommendations when selecting and applying the pipe dope. The pipe dope should be compatible with the liquid being pumped.

Suction Lines In Sumps

If a single suction line is installed in a sump, it should be positioned away from the wall of the sump at a distance equal to 1 1/2 times the diameter of the suction line.

If there is a liquid flow from an open pipe into the sump, the flow should be kept away from the suction inlet because the inflow will carry air down into the sump, and air entering the suction line will reduce pump efficiency.

If it is necessary to position inflow close to the suction inlet, install a baffle between the inflow and the suction inlet at a distance 1 1/2 times the diameter of the suction pipe. The baffle will allow entrained air to escape from the liquid before it is drawn into the suction inlet.

If two suction lines are installed in a single sump, the flow paths may interact, reducing the efficiency of one or both pumps. To avoid this, position the suction inlets so that they are separated by a distance equal to at least 3 times the diameter of the suction pipe.

Suction Line Positioning

The depth of submergence of the suction line is critical to efficient pump operation. Figure 2 shows recommended minimum submergence vs. velocity.

NOTE

The pipe submergence required may be reduced by installing a standard pipe increaser fitting at the end of the suction line. The larger opening size will reduce the inlet velocity. Calculate the required submergence using the following formula based on the increased opening size (area or diameter).

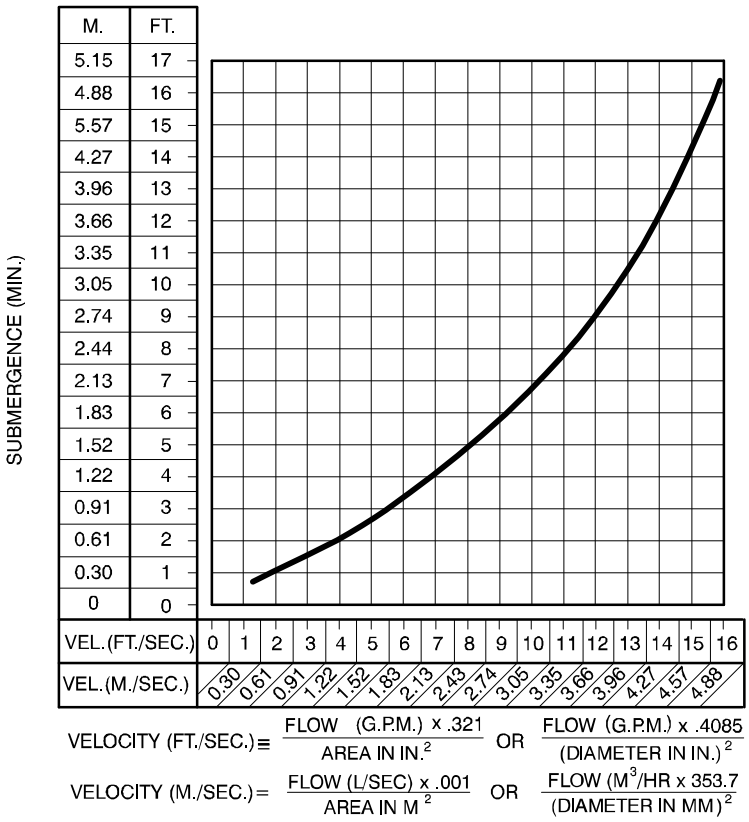

Figure 2. Recommended Minimum Suction Line Submergence vs. Velocity

non potable pumps

DISCHARGE LINES

Siphoning

Do not terminate the discharge line at a level lower than that of the liquid being pumped unless a siphon breaker is used in the line. Otherwise, a siphoning action causing damage to the pump could result.

Valves

If a throttling valve is desired in the discharge line, use a valve as large as the largest pipe to minimize friction losses. Never install a throttling valve in a suction line.

With high discharge heads, it is recommended that a throttling valve and a system check valve be installed in the discharge line to protect the pump from excessive shock pressure and reverse rotation when it is stopped.

CAUTION

If the application involves a high discharge head, gradually close the discharge throttling valve before stopping the pump.

Bypass Lines

Self-priming pumps are not air compressors. During the priming cycle, air from the suction line must be vented to atmosphere on the discharge side. If the discharge line is open, this air will be vented through the discharge. However, if a check valve has been installed in the discharge line, the discharge side of the pump must be opened to atmospheric pressure through a bypass line installed between the pump discharge and the check valve. A self-priming centrifugal pump **will not prime** if there is sufficient static liquid head to hold the discharge check valve closed.

NOTE

The bypass line should be sized so that it does not affect pump discharge capacity; however, the bypass line should be at least 1 inch in diameter to minimize the chance of plugging.

In **low discharge head applications** (less than 30 feet or 9 meters), it is recommended that the bypass line be run back to the wet well, and located 6 inches below the water level or cut-off point of the low level pump. In some installations, this bypass line may be terminated with a six-to-eight foot length of 1 1/4 inch I.D. **smooth-bore** hose; air and liquid vented during the priming process will then agitate the hose and break up any solids, grease, or other substances likely to cause clogging.

CAUTION

A bypass line that is returned to a wet well must be secured against being drawn into the pump suction inlet.

It is also recommended that pipe unions be installed at each 90° elbow in a bypass line to ease disassembly and maintenance.

In **high discharge head applications** (more than 30 feet), an excessive amount of liquid may be bypassed and forced back to the wet well under the full working pressure of the pump; this will reduce overall pumping efficiency. **Therefore, it is recommended that a Gorman-Rupp Automatic Air Release Valve be installed in the bypass line.**

Gorman-Rupp Automatic Air Release Valves are reliable, and require minimum maintenance. See **AUTOMATIC AIR RELEASE VALVE** in this section for installation and theory of operation of the Automatic Air Release Valve. Consult your Gorman-Rupp distributor, or contact the Gorman-Rupp Company for selection of an Automatic Air Release Valve to fit your application.

If the installation involves a flooded suction such as a below-ground lift station. A pipe union and manual shut-off valve may be installed in the bleed line to allow service of the valve without shutting down the station, and to eliminate the possibility of flooding. If a manual shut-off valve is installed **anywhere** in the air release piping, it **must** be a full-opening **ball type** valve to prevent plugging by solids.

non potable pumps

DANGER!

If a manual shut-off valve is installed in a bypass line, it must not be left closed during operation. A closed manual shut-off valve may cause a pump which has lost prime to continue to operate without reaching prime, causing dangerous overheating and possible explosive rupture of the pump casing. Personnel could be severely injured.

Allow an over-heated pump to cool before servicing. Do not remove plates, covers, gauges, or fittings from an overheated pump. Liquid within the pump can reach boiling temperatures, and vapor pressure within the pump can cause parts being disengaged to be ejected with great force. After the pump cools, drain the liquid from the pump by removing the casing drain plug. Use caution when removing the plug to prevent injury to personnel from hot liquid.

AUTOMATIC AIR RELEASE VALVE

When properly installed, a Gorman-Rupp Automatic Air Release Valve will permit air to escape through the bypass line and then close automatically when the pump is fully primed and pumping at full capacity.

WARNING!

Some leakage (1 to 5 gallons [3.8 to 19 liters] per minute) will occur when the valve is fully closed. Be sure the bypass line is directed back to the wet well or tank to prevent hazardous spills.

Consult the manual accompanying the Air Release Valve for additional information on valve installation and performance.

Air Release Valve Installation

The Automatic Air Release Valve must be independently mounted in a horizontal position between the pump discharge port and the inlet side of the discharge check valve (see Figure 3). The inlet opening in the Air Release Valve is equipped with standard 1-inch NPT pipe threads.

non potable pumps

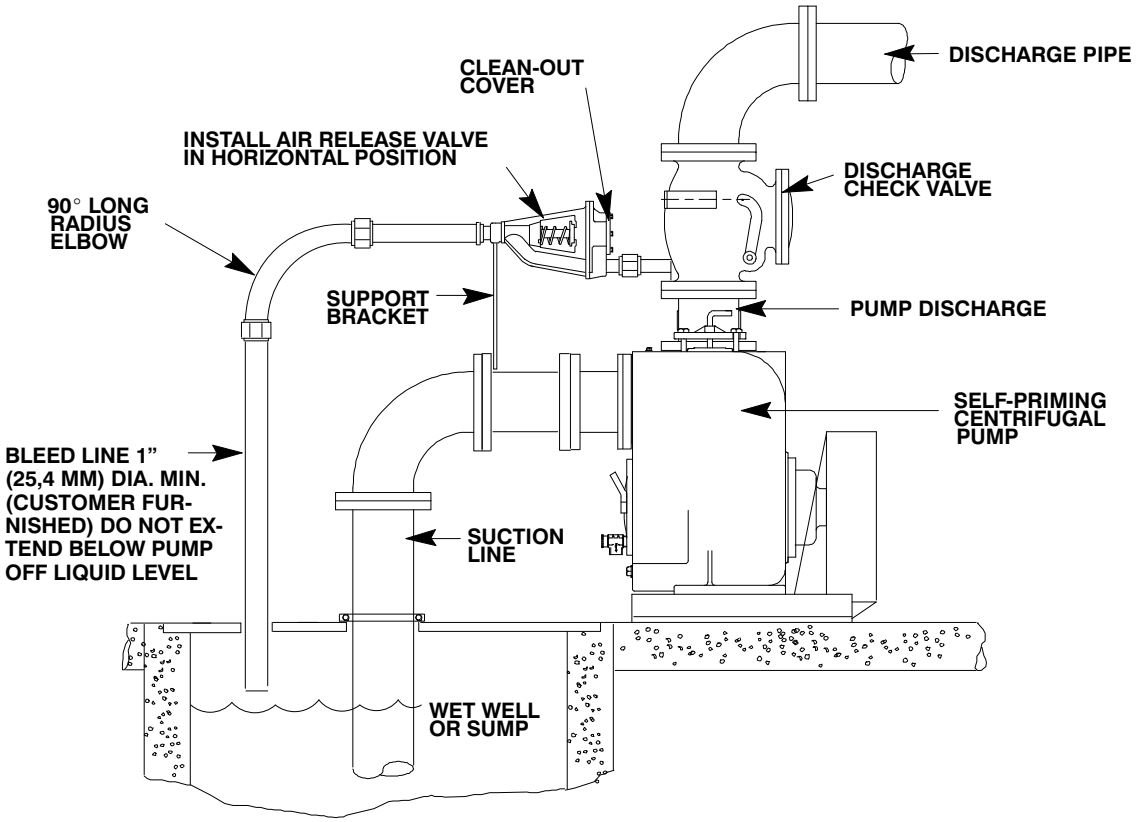

Figure 3. Typical Automatic Air Release Valve Installation

Connect the valve outlet to a bleed line which slopes back to the wet well or sump. The bleed line must be the same size as the outlet opening or larger, depending on which Air Release Valve is being used. If **piping** is used for the bleed line, avoid the use of elbows whenever possible.

NOTE

*For multiple pump installations, it is recommended that each Air Release Valve be fitted with an independent bleeder line directed back to the wet well. If multiple Air Release Valves are installed in a system, **do not** direct bleeder lines to a common manifold pipe. Contact your Gorman-Rupp distributor or the Gorman-Rupp Company for information about installation of an Automatic Air Release Valve for your specific application.*

ALIGNMENT

The alignment of the pump and its power source is critical for trouble-free mechanical operation. In either a flexible coupling or V-belt driven system, the driver and pump must be mounted so that their shafts are aligned with and parallel to each other. It is imperative that alignment be checked after the pump and piping are installed, and before operation.

NOTE

Check **Rotation**, *Section C, before final alignment of the pump.*

When mounted at the Gorman-Rupp factory, driver and pump are aligned before shipment. Misalignment will occur in transit and handling. Pumps **must** be checked and realigned before operation. Before checking alignment, tighten the foundation bolts. The pump casing feet and/or pedestal feet, and the driver mounting bolts should also be tightly secured.

WARNING!

When checking alignment, disconnect the power source to ensure that the pump will remain inoperative.

non potable pumps

CAUTION

Adjusting the alignment in one direction may alter the alignment in another direction. check each procedure after altering alignment.

Coupled Drives

When using couplings, the axis of the power source must be aligned to the axis of the pump shaft in both the horizontal and vertical planes. Most couplings require a specific gap or clearance between the driving and the driven shafts. Refer to the coupling manufacturer's service literature.

Align spider insert type couplings by using calipers to measure the dimensions on the circumference of the outer ends of the coupling hub every 90°. The coupling is in alignment when the hub ends are the same distance apart at all points (see Figure 4).

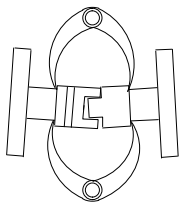

Figure 4. Aligning Spider-Type Couplings

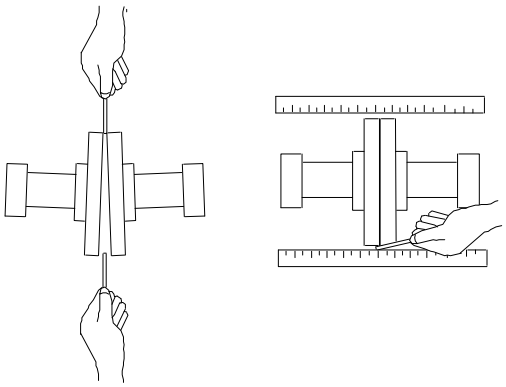

Figure 5. Aligning Non-Spider Type Couplings

Align non-spider type couplings by using a feeler gauge or taper gauge between the coupling halves every 90°. The coupling is in alignment when the hubs are the same distance apart at all points (see Figure 5).

Check parallel adjustment by laying a straightedge across both coupling rims at the top, bottom, and side. When the straightedge rests evenly on both halves of the coupling, the coupling is in horizontal parallel alignment. If the coupling is misaligned, use a feeler gauge between the coupling and the straightedge to measure the amount of misalignment.

Drive Belts

When using drive belts, the power source and the pump must be parallel. Use a straightedge along the sides of the pulleys to ensure that the pulleys are properly aligned (see Figure 6). In drive systems using two or more belts, make certain that the belts are a matched set; unmatched sets will cause accelerated belt wear.

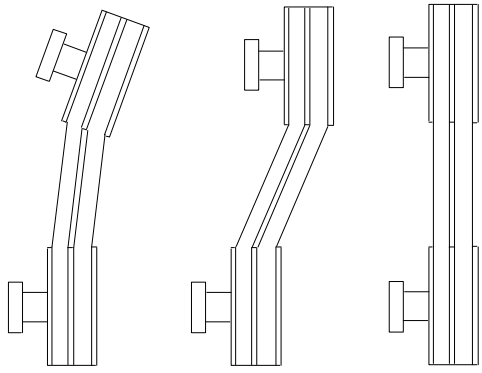

MISALIGNED: SHAFTS NOT PARALLEL | **MISALIGNED: SHAFTS NOT IN LINE** | **ALIGNED: SHAFTS PARALLEL AND SHEAVES IN LINE**

Figure 6. Alignment of V-Belt Driven Pumps

Tighten the belts in accordance with the belt manufacturer's instructions. If the belts are too loose, they will slip; if the belts are too tight, there will be excessive power loss and possible bearing failure. Select pulleys that will match the proper speed ratio; overspeeding the pump may damage both pump and power source.

DANGER!

Do not operate the pump without the guard in place over the rotating parts. exposed rotating parts can catch clothing, fingers, or tools, causing severe injury to personnel.

non potable pumps

DRIVE BELT TENSIONING

General Rules of Tensioning

For new drive belts, check the tension after 5, 20 and 50 hours of operation and re-tension as required (see the following procedure for measuring belt tension). Thereafter, check and re-tension if required monthly or at 500 hour intervals, whichever comes first.

Ideal drive belt tension is the **lowest** tension at which the belt will not slip under peak load conditions. Do not over-tension drive belts. Over-tensioning will shorten both drive belt and bearing life. Under-tensioning will cause belt slippage. Always keep belts free from dirt, grease, oil and other foreign material which may cause slippage.

non potable pumps

OPERATION — SECTION C

Review all SAFETY information in Section A.

Follow the instructions on all tags, labels and decals attached to the pump.

WARNING!

This pump is designed to handle liquids containing large entrained solids and slurries. Do not attempt to pump volatile, corrosive, or flammable liquids which may damage the pump or endanger personnel as a result of pump failure.

CAUTION

Pump speed and operating conditions must be within the performance range shown on page E-1.

PRIMING

Install the pump and piping as described in **INSTALLATION**. Make sure that the piping connections are tight, and that the pump is securely mounted. Check that the pump is properly lubricated (see **LUBRICATION** in **MAINTENANCE AND REPAIR**).

This pump is self-priming, but the pump should never be operated unless there is liquid in the pump casing.

CAUTION

Never operate this pump unless there is liquid in the pump casing. The pump will not prime when dry. extended operation of a dry pump will destroy the seal assembly.

Add liquid to the pump casing when:

1. The pump is being put into service for the first time.
2. The pump has not been used for a considerable length of time.
3. The liquid in the pump casing has evaporated.

Once the pump casing has been filled, the pump will prime and reprime as necessary.

WARNING!

After filling the pump casing, reinstall and tighten the fill plug. Do not attempt to operate the pump unless all connecting piping is securely installed. Otherwise, liquid in the pump forced out under pressure could cause injury to personnel.

To fill the pump, remove the pump casing fill cover or fill plug in the top of the casing, and add clean liquid until the casing is filled. Replace the fill cover or fill plug before operating the pump.

STARTING

Consult the operations manual furnished with the power source.

Rotation

The correct direction of pump rotation is counterclockwise when facing the impeller. The pump could be damaged and performance adversely affected by incorrect rotation. If pump performance is not within the specified limits (see the curve on page E-1), check the direction of power source rotation before further troubleshooting.

If an electric motor is used to drive the pump, remove V-belts, couplings, or otherwise disconnect the pump from the motor before checking motor rotation. Operate the motor independently while observing the direction of the motor shaft, or cooling fan.

non potable pumps

If rotation is incorrect on a three-phase motor, have a qualified electrician interchange any two of the three phase wires to change direction. If rotation is incorrect on a single-phase motor, consult the literature supplied with the motor for specific instructions.

OPERATION

Lines With a Bypass

If a Gorman-Rupp Automatic Air Release Valve has been installed, the valve will automatically open to allow the pump to prime, and automatically close after priming is complete (see **INSTALLATION** for Air Release Valve operation).

If the bypass line is open, air from the suction line will be discharged through the bypass line back to the wet well during the priming cycle. Liquid will then continue to circulate through the bypass line while the pump is in operation.

Lines Without a Bypass

Open all valves in the discharge line and start the power source. Priming is indicated by a positive reading on the discharge pressure gauge or by a quieter operation. The pump may not prime immediately because the suction line must first fill with liquid. If the pump fails to prime within five minutes, stop it and check the suction line for leaks.

After the pump has been primed, partially close the discharge line throttling valve in order to fill the line slowly and guard against excessive shock pressure which could damage pipe ends, gaskets, sprinkler heads, and any other fixtures connected to the line. When the discharge line is completely filled, adjust the throttling valve to the required flow rate.

WARNING!

Do not operate the pump against a closed discharge throttling valve for long periods of time. If operated against a closed discharge throttling valve, pump components will deteriorate, and the liquid could come to a boil, build pressure, and cause the pump casing to rupture or explode.

Leakage

No leakage should be visible at pump mating surfaces, or at pump connections or fittings. Keep all line connections and fittings tight to maintain maximum pump efficiency.

Liquid Temperature And Overheating

The **maximum** liquid temperature for this pump is 160°F (71°C). Do not apply it at a higher operating temperature.

Overheating can occur if operated with the valves in the suction or discharge lines closed. Operating against closed valves could bring the liquid to a boil, build pressure, and cause the pump to rupture or explode. If overheating occurs, stop the pump and allow it to cool before servicing it. Refill the pump casing with cool liquid.

DANGER!

Allow an over-heated pump to completely cool before servicing. Do not remove plates, covers, gauges, or fittings from an over-heated pump. Liquid within the pump can reach boiling temperatures, and vapor pressure within the pump can cause parts being disengaged to be ejected with great force. After the pump completely cools, drain the liquid from the pump by removing the casing drain plug. Use caution when removing the plug to prevent injury to personnel from hot liquid.

As a safeguard against rupture or explosion due to heat, this pump is equipped with a pressure relief valve which will open if vapor pressure within the pump casing reaches a critical point. If overheating does occur, stop the pump immediately and allow it to cool before servicing it. **Approach any overheated pump cautiously**. It is recommended that the pressure relief valve assembly be replaced at each overhaul, or any time the pump casing over-

non potable pumps

heats and activates the valve. **Never** replace this valve with a substitute which has not been specified or provided by the Gorman-Rupp Company.

Strainer Check

If a suction strainer has been shipped with the pump or installed by the user, check the strainer regularly, and clean it as necessary. The strainer should also be checked if pump flow rate begins to drop. If a vacuum suction gauge has been installed, monitor and record the readings regularly to detect strainer blockage.

Never introduce air or steam pressure into the pump casing or piping to remove a blockage. This could result in personal injury or damage to the equipment. If backflushing is absolutely necessary, liquid pressure **must** be limited to 50% of the maximum permissible operating pressure shown on the pump performance curve.

Pump Vacuum Check

With the pump inoperative, install a vacuum gauge in the system, using pipe dope on the threads. Block the suction line and start the pump. At operating speed the pump should pull a vacuum of 20 inches (508,0 mm) or more of mercury. If it does not, check for air leaks in the seal, gasket, or discharge valve.

Open the suction line, and read the vacuum gauge with the pump primed and at operation speed. Shut off the pump. The vacuum gauge reading will immediately drop proportionate to static suction lift, and should then stabilize. If the vacuum reading falls off rapidly after stabilization, an air leak exists. Before checking for the source of the leak, check the point of installation of the vacuum gauge.

STOPPING

Never halt the flow of liquid suddenly. If the liquid being pumped is stopped abruptly, damaging shock waves can be transmitted to the pump and piping system. Close all connecting valves slowly.

On engine driven pumps, reduce the throttle speed slowly and allow the engine to idle briefly before stopping.

CAUTION

If the application involves a high discharge head, gradually close the discharge throttling valve before stopping the pump.

After stopping the pump, lock out or disconnect the power source to ensure that the pump will remain inoperative.

WARNING!

Do not operate the pump against a closed discharge throttling valve for long periods of time. If operated against a closed discharge throttling valve, pump components will deteriorate, and the liquid could come to a boil, build pressure, and cause the pump casing to rupture or explode.

Cold Weather Preservation

In below freezing conditions, drain the pump to prevent damage from freezing. Also, clean out any solids by flushing with a hose. Operate the pump for approximately one minute; this will remove any remaining liquid that could freeze the pump rotating parts. If the pump will be idle for more than a few hours, or if it has been pumping liquids containing a large amount of solids, drain the pump, and flush it thoroughly with clean water. To prevent large solids from clogging the drain port and preventing the pump from completely draining, insert a rod or stiff wire in the drain port, and agitate the liquid during the draining process. Clean out any remaining solids by flushing with a hose.

BEARING TEMPERATURE CHECK

Bearings normally run at higher than ambient temperatures because of heat generated by friction. Temperatures up to 160°F (71°C) are considered normal for bearings, and they can operate safely to at least 180°F (82°C).

Checking bearing temperatures by hand is inaccurate. Bearing temperatures can be measured accurately by placing a contact-type thermometer

non potable pumps

against the housing. Record this temperature for future reference.

A sudden increase in bearing temperature is a warning that the bearings are at the point of failing to operate properly. Make certain that the bearing lubricant is of the proper viscosity and at the correct level (see **LUBRICATION** in **MAINTENANCE AND REPAIR**). Bearing overheating can also be caused by shaft misalignment and/or excessive vibration.

When pumps are first started, the bearings may seem to run at temperatures above normal. Continued operation should bring the temperatures down to normal levels.

non potable pumps

TROUBLESHOOTING — SECTION D

Review all SAFETY information in Section A.

WARNING!

Before attempting to open or service the pump:

1. **Familiarize yourself with this manual.**
2. **Lock out or disconnect the power source to ensure that the pump will remain inoperative.**
3. **Allow the pump to completely cool if overheated.**
4. **Check the temperature before opening any covers, plates, or plugs.**
5. **Close the suction and discharge valves.**
6. **Vent the pump slowly and cautiously.**
7. **Drain the pump.**

TROUBLE	POSSIBLE CAUSE	PROBABLE REMEDY
PUMP FAILS TO PRIME	Not enough liquid in casing.	Add liquid to casing. See **PRIMING**.
	Suction check valve contaminated or damaged.	Clean or replace check valve.
	Air leak in suction line.	Correct leak.
	Lining of suction hose collapsed.	Replace suction hose.
	Leaking or worn seal or pump gasket.	Check pump vacuum. Replace leaking or worn seal or gasket.
	Suction lift or discharge head too high.	Check piping installation and install bypass line if needed. See **INSTALLATION**.
	Strainer clogged.	Check strainer and clean if necessary.
PUMP STOPS OR FAILS TO DELIVER RATED FLOW OR PRESSURE	Air leak in suction line.	Correct leak.
	Lining of suction hose collapsed.	Replace suction hose.
	Leaking or worn seal or pump gasket.	Check pump vacuum. Replace leaking or worn seal or gasket.

non potable pumps

TROUBLE	POSSIBLE CAUSE	PROBABLE REMEDY
PUMP STOPS OR FAILS TO DELIVER RATED FLOW OR PRESSURE	Strainer clogged.	Check strainer and clean if necessary.
	Suction intake not submerged at proper level or sump too small.	Check installation and correct submergence as needed.
	Impeller or other wearing parts worn or damaged.	Replace worn or damaged parts. Check that impeller is properly centered and rotates freely.
	Impeller clogged.	Free impeller of debris.
	Pump speed too slow.	Check driver output; check belts or couplings for slippage.
	Discharge head too high.	Install bypass line.
	Suction lift too high.	Measure lift w/vacuum gauge. Reduce lift and/or friction losses in suction line.
PUMP REQUIRES TOO MUCH POWER	Pump speed too high.	Check driver output; check that sheaves or couplings are correctly sized.
	Discharge head too low.	Adjust discharge valve.
	Liquid solution too thick.	Dilute if possible.
	Bearing(s) frozen.	Disassemble pump and check bearing(s).
PUMP CLOGS FREQUENTLY	Liquid solution too thick.	Dilute if possible.
	Discharge flow too slow.	Open discharge valve fully to increase flow rate, and run power source at maximum governed speed.
	Suction check valve or foot valve clogged or binding.	Clean valve.
EXCESSIVE NOISE	Cavitation in pump.	Reduce suction lift and/or friction losses in suction line. Record vacuum and pressure gauge readings and consult local representative or factory.
	Pumping entrained air.	Locate and eliminate source of air bubble.
	Pump or drive not securely mounted.	Secure mounting hardware.
	Impeller clogged or damaged.	Clean out debris; replace damaged parts.

non potable pumps

TROUBLE	POSSIBLE CAUSE	PROBABLE REMEDY
BEARINGS RUN TOO HOT	Bearing temperature is high, but within limits.	Check bearing temperature regularly to monitor any increase.
	Low or incorrect lubricant.	Check for proper type and level of lubricant.
	Suction and discharge lines not properly supported.	Check piping installation for proper support.
	Drive misaligned.	Align drive properly.

PREVENTIVE MAINTENANCE

Since pump applications are seldom identical, and pump wear is directly affected by such things as the abrasive qualities, pressure and temperature of the liquid being pumped, this section is intended only to provide general recommendations and practices for preventive maintenance. Regardless of the application however, following a routine preventive maintenance schedule will help assure trouble-free performance and long life from your Gorman-Rupp pump. For specific questions concerning your application, contact your Gorman-Rupp distributor or the Gorman-Rupp Company.

Record keeping is an essential component of a good preventive maintenance program. Changes in suction and discharge gauge readings (if so equipped) between regularly scheduled inspections can indicate problems that can be corrected before system damage or catastrophic failure occurs. The appearance of wearing parts should also be documented at each inspection for comparison as well. Also, if records indicate that a certain part (such as the seal) fails at approximately the same duty cycle, the part can be checked and replaced before failure occurs, reducing unscheduled down time.

For new applications, a first inspection of wearing parts at 250 hours will give insight into the wear rate for your particular application. Subsequent inspections should be performed at the intervals shown on the chart below. Critical applications should be inspected more frequently.

non potable pumps

Preventive Maintenance Schedule

Item	Service Interval*				
	Daily	Weekly	Monthly	Semi-Annually	Annually
General Condition (Temperature, Unusual Noises or Vibrations, Cracks, Leaks, Loose Hardware, Etc.)	I				
Pump Performance (Gauges, Speed, Flow)	I				
Bearing Lubrication		I			R
Seal Lubrication (And Packing Adjustment, If So Equipped)		I			R
V-Belts (If So Equipped)			I		
Air Release Valve Plunger Rod (If So Equipped)			I	C	
Front Impeller Clearance (Wear Plate)				I	
Rear Impeller Clearance (Seal Plate)				I	
Check Valve					I
Pressure Relief Valve (If So Equipped)					C
Pump and Driver Alignment					I
Shaft Deflection					I
Bearings					I
Bearing Housing					I
Piping					I
Driver Lubrication — See Mfgr's Literature					

Legend:
I = Inspect, Clean, Adjust, Repair or Replace as Necessary
C = Clean
R = Replace

* Service interval based on an intermittent duty cycle equal to approximately 4000 hours annually. Adjust schedule as required for lower or higher duty cycles or extreme operating conditions.

non potable pumps

PUMP MAINTENANCE AND REPAIR – SECTION E

MAINTENANCE AND REPAIR OF THE WEARING PARTS OF THE PUMP WILL MAINTAIN PEAK OPERATING PERFORMANCE.

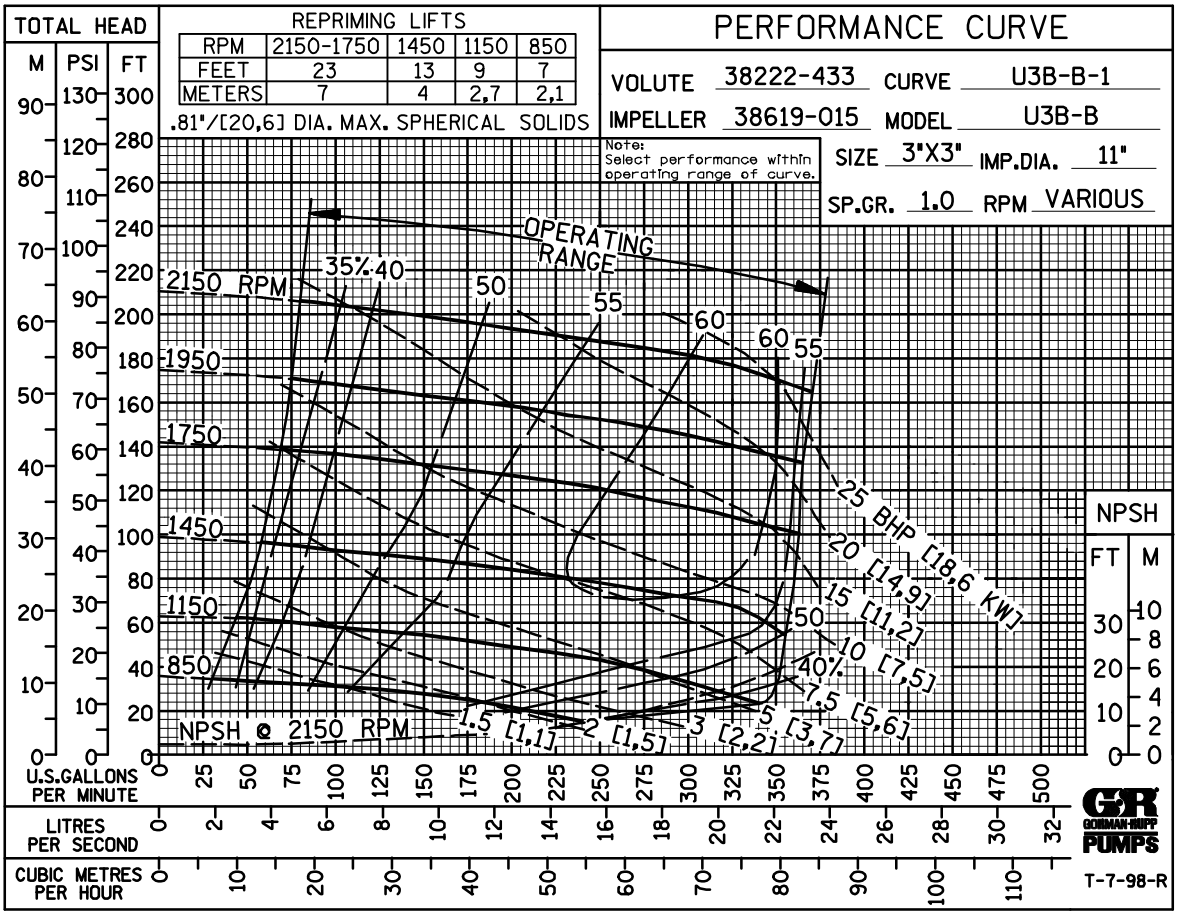

✳ **STANDARD PERFORMANCE FOR PUMP MODEL U3B60S–B Including /F, /FM, /WW**

✳ Based on 70°F (21°C) clear water at sea level with minimum suction lift. Since pump installations are seldom identical, your performance may be different due to such factors as viscosity, specific gravity, elevation, temperature, and impeller trim.

If your pump serial number is followed by an "N", your pump is **NOT** a standard production model. Contact the Gorman-Rupp Company to verify performance or part numbers.

CAUTION

Pump speed and operating condition points must be within the continuous performance range shown on the curve.

non potable pumps

ILLUSTRATION

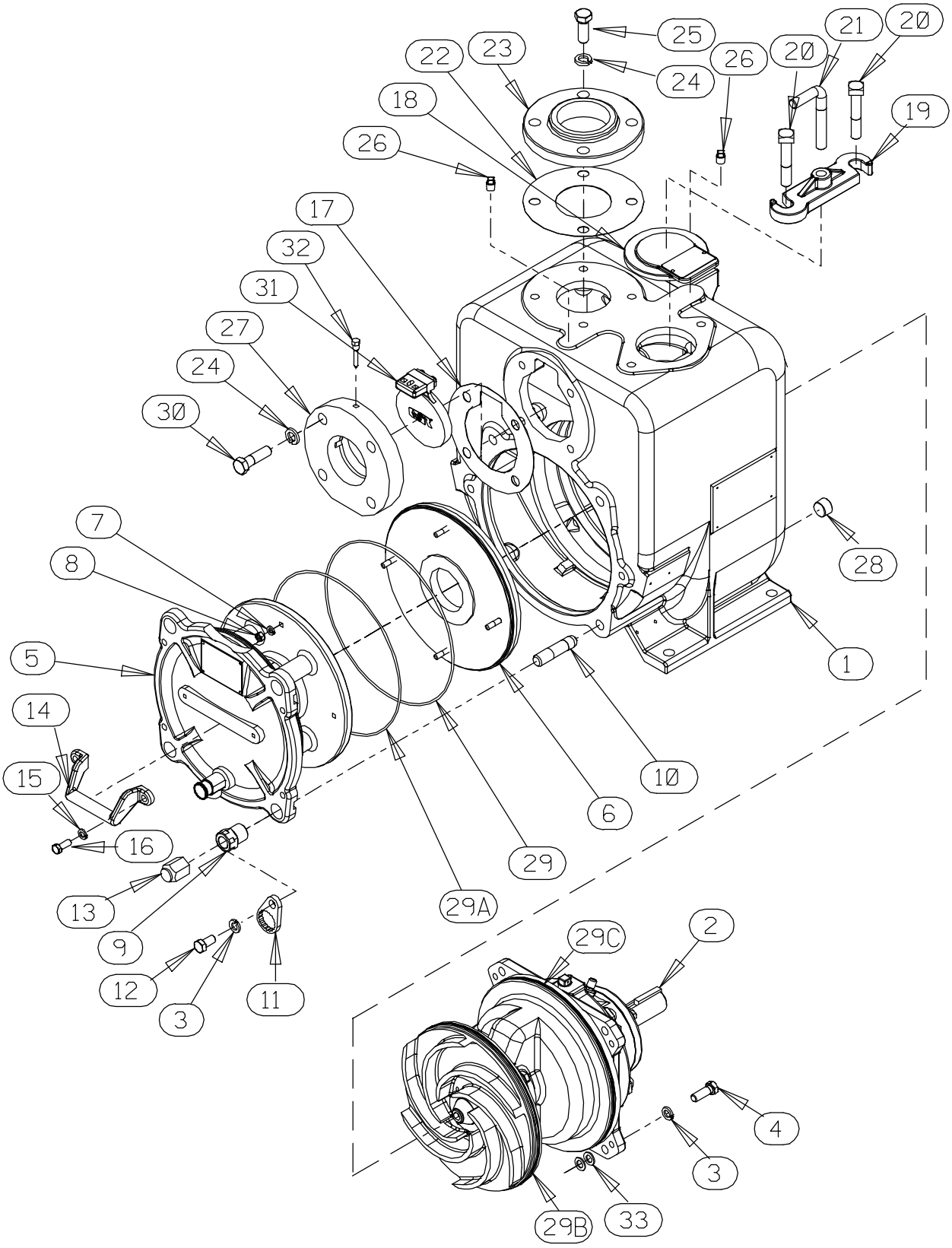

Figure 1. Pump Model U3B60S–B, Including /F, /FM, /WW

non potable pumps

PARTS LIST
Pump Model U3B60S–B, Including /F, /FM, /WW
(From S/N 1289509 Up)

If your pump serial number is followed by an "N", your pump is **NOT** a standard production model. Contact the Gorman-Rupp Company to verify part numbers.

ITEM NO.	PART NAME	PART NUMBER	QTY
☞ 1	PUMP CASING	SEE NOTE BELOW	1
2	REPAIR ROTATING ASSY		
	U3B60S–B, /F, /FM	44163–409	1
	U3B60S–B /WW	44163–415	1
3	LOCK WASHER	J08 15991	8
4	HEX HEAD CAP SCREW	B0806 15991	4
5	BACK COVER PLATE ASSY	42111–824	1
	–WARNING PLATE	2613EV 13990	1
	–DRIVE SCREW	BM#04–03 17000	4
✳	–PRESS RELIEF VALVE	26662–006	1
	–WARNING DECAL	38816–302	1
6 ✳	WEAR PLATE ASSY	46451–735	1
7	LOCK WASHER	J05 15991	4
8	HEX NUT	D05 15991	4
9	ADJUSTING SCREW	31871–070 1500G	4
☞10	STUD	C1213 15991	4
11	LOCK COLLAR	38115–551 15001	4
12	HEX HEAD CAP SCREW	B0804–1/2 15991	4
13	BACK COVER NUT	31871–073 15000	4
14	HANDLE	12354 13010	1
15	LOCK WASHER	J06 15991	2
16	HEX HEAD CAP SCREW	B0604 15991	2
17 ✳	SUCT FLANGE GASKET	11412G 19370	1
18	FILL COVER PLATE ASSY	42111–344	1
	–WARNING PLATE	38816–097 13990	1
	–DRIVE SCREW	BM#04–03 17000	2
✳	–FILL COVER GASKET	50G 19210	1
19	CLAMP BAR	38111–004 11010	1
☞20	MACHINE BOLT	A1014 15991	2
21	CLAMP BAR SCREW	31912–009 15000	1
22 ✳	GASKET	25113–033	1
23	COMPANION FLANGE	1753A 10010	1
24	LOCK WASHER	J10 15991	8
25	HEX HEAD CAP SCREW	B1007 15991	4
☞26	PIPE PLUG	P04 15079	4
27	SUCTION FLANGE	11412 10010	1
☞28	SOC HD PIPE PLUG	25321–145	2
29 ✳	WEAR PLATE O-RING	25152–276	1
29A ✳	BACK COVER O-RING	25152–276	1
29B ✳	SEAL PLATE O-RING	25152–276	1
29C ✳	BRG HOUSING O-RING	25152–276	1
30	HEX HEAD CAP SCREW	B1009 15991	4
31 ✳	3 IN FLAP VALVE ASSY	46411–060	1
32	CHECK VALVE PIN	11557A 17010	1
33	ROT ASSY ADJ SHIM	13130–3 17040	8

ITEM NO.	PART NAME	PART NUMBER	QTY
NOT SHOWN:			
	ROTATION DECAL	2613M	1
	NAMEPLATE	38818–026 13990	1
	DRIVE SCREW	BM#04–03 17000	4
	LUBE DECAL	38817–084	1
	SUCTION STICKER	6588AG	1
	PRIMING STICKER	6588AH	1
	DISCHARGE STICKER	6588BJ	1
	G-R DECAL	GR–03	1
	INSTRUCTION TAG	38817–023	1
	SUPER "U" DECAL	38812–094	1
	WARNING DECAL	2613FE	1
	INSTRUCTION TAG	38817–011	1
OPTIONAL			
	DISASSEMBLY TOOL	48711–020	1
	WEAR PLATE ASSY:		
	–316 SST	46451–748	1
	–CD4MCU SST	46451–736	1
	–G-R HARD IRON	46451–745	1
	/F FLANGE KIT	48213–040	1
	–SUCTION	11412A 10010	1
	–DISCHARGE	10845 10010	1
	/FM METRIC FLANGE KIT	48213–076	1
	–SUCTION	38642–208 10000	1
	–DISCHARGE	38642–209 10000	1
	CASING HEATERS:		
	–120V	47811–066	1
	–240V	47811–067	1
	CHECK VALVE ASSYS:		
	–NEO SOLID TYPE	46411–043	1
✓	–VITON SOLID	46411–086	1
✓	–VITON BLOW–OUT	46411–074	1
	–BUNA-N	46411–102	1
	–EPDM	46411–120	1
	PRESS RELIEF VALVE:		
	–STAINLESS STEEL	26662–101	1
	HI TEMP SHUT-DOWN KITS:		
	–145°F	48313–186	1
	–130°F	48313–256	1
	–120°F	48313–257	1
	HI TEMP SHUT-DOWN THERMOSTAT KITS 145°F	48313–172	1
	AIR RELEASE VALVES:		
	–10# COMP SPRING	GRP33–07A	1
	–25# COMP SPRING	GRP33–07	1
	–80# COMP SPRING	GRP33–07B	1
	A/R VALVE MOUNT KIT	46331–515	1

✳ INDICATES PARTS RECOMMENDED FOR STOCK

☞	INCLUDED WITH REPAIR PUMP CASING ASSY	46471–714	1

✓ VITON® IS A REGISTERED TRADEMARK OF THE DUPONT CORP

non potable pumps

ILLUSTRATION

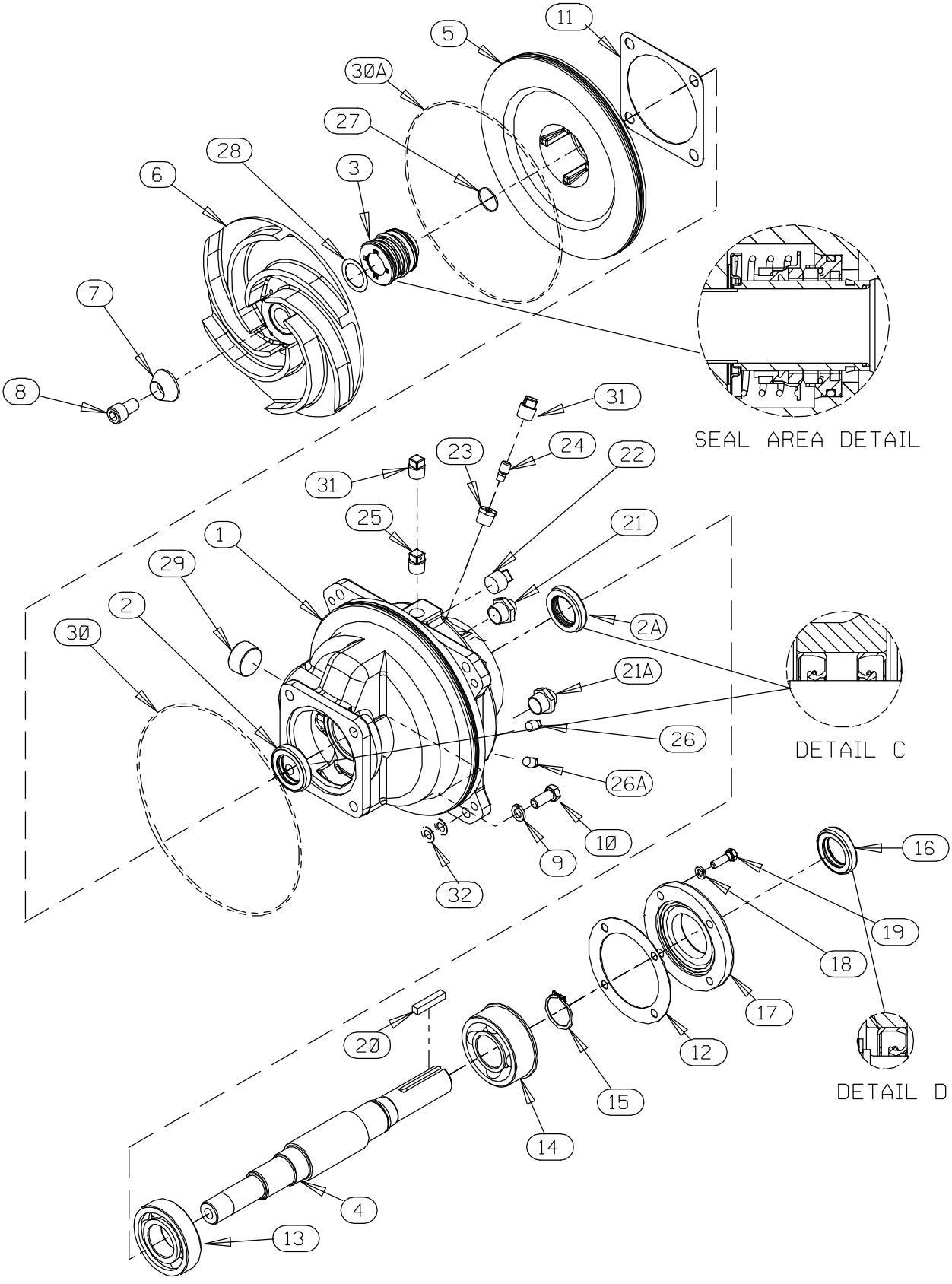

Figure 2. Repair Rotating Assemblies

non potable pumps

PARTS LIST
Repair Rotating Assemblies

Note: Order complete Repair Rotating Assembly for /WW model from the Pump Model Assembly Parts List on page E—3. Repair Rotating Assembly for /WW models include all of the standard parts listed below.

ITEM NO.	PART NAME	PART NUMBER	QTY
1	BEARING HOUSING	38251—520 10000	1
2 ✳	OIL SEAL	S1352	1
2A ✳	OIL SEAL	S1352	1
3 ✳	CART SEAL ASSY	46513—151	1
4 ✳	IMPELLER SHAFT	38514—571 16040	1
5	SEAL PLATE	38272—235 10010	1
6 ✳	IMPELLER	38619—015 11000	1
7	IMPELLER WASHER	10278 15030	1
8	SOC HD CAP SCREW	DM1004S 15991	1
9	LOCK WASHER	J08 15991	4
10	HEX HD CAP SCREW	B0805 15991	4
11 ✳	GASKET	10959G 20000	1
12 ✳	GASKET	38683—271 18000	1
13 ✳	BALL BEARING	S1088	1
14 ✳	DBL ROW BALL BRG	S375	1
15	RETAINING RING	S442	1
16 ✳	OIL SEAL	S1352	1
17	BEARING CAP	38322—220 10000	1
18	LOCK WASHER	J06 15991	4
19	HEX HD CAP SCREW	B0605 15991	4
20 ✳	SHAFT KEY	N0608 15990	1
21	SEAL CVTY SIGHT GAUGE	S1471	1
21A	BRG CVTY SIGHT GAUGE	S1471	1
22	PIPE PLUG	P12 15079	1
23	RED PIPE BUSHING	AP0802 15079	1
24	AIR VENT	S1530	1
25	VENTED PIPE PLUG	4823A 15079	1
26	SEAL CVTY DRAIN PLUG	P04 15079	1
26A	BRG CVTY DRAIN PLUG	P04 15079	1
27	O-RING	25154—022	REF
28	IMP ADJ SHIM SET	37J 17090	REF
29	SOC HD PIPE PLUG	PC20 10009	1
30 ✳	O-RING	25152—276	1
30A ✳	O-RING	25152—276	1
31	SHIPPING PLUG	11495B 15079	2
32	ROT ASSY ADJ SHIM	13130—3 17040	8

ITEM NO.	PART NAME	PART NUMBER	QTY
NOT SHOWN:			
	S/N PLATE	2613GG 13990	1
	DRIVE SCREW	BM#04—03 17000	2
	ROTATION DECAL	2613M	1
	INSRUCTION TAG	6588U	1
OPTIONAL:			
	IMPELLERS:		
	—G-R HARD IRON	38619—015	1
	—316 SST	38619—015 17040	1
	—CD4MCU SST	38619—015	1
	SEAL PLATES:		
	—G-R HARD IRON	38272—235	1
	—316 SST	38272—235 17040	1
	—CD4MCU SST	38272—235	1
	STAINLESS STEEL PARTS:		
	—IMP SHAFT (LESS SLEEVE)	38514—572	1
	—IMPELLER WASHER	10278 17090	1
	—IMP CAPSCREW	DM1004S 17090	1
	—SEAL ASSEMBLY	46512—074	1
†	STD MECHANICAL SEAL ASSEMBLY	46512—047	1
†	STD MECHANICAL SEAL SHAFT SLEEVE	11876A 16000	1
† ★	AFLAS SEAL (USE W/SST SLEEVE OR SOLID SST SHAFT)	46512—194	1
†	METAL BELLOWS MECH SEAL ASSY (VITON OR EQUAL)	46512—147	1
†	METAL BELLOWS MECH SEAL ASSY (KALREZ)	46512—142	1

✳ INDICATES PARTS RECOMMENDED FOR STOCK

† OPTIONAL MECHANICAL SEAL(S) MUST BE USED WITH MECHANICAL SEAL SHAFT SLEEVE OR SOLID SST SHAFT.

KALREZ® AND VITON™ ARE REGISTERED TRADEMARKS OF THE DUPONT CORP.

★ AFLAS® IS A REGISTERED TRADEMARK OF THE 3M CORP.

non potable pumps

PUMP AND SEAL DISASSEMBLY AND REASSEMBLY

Review all SAFETY information in Section A.

Follow the instructions on all tags, label and decals attached to the pump.

This pump requires little service due to its rugged, minimum-maintenance design. However, if it becomes necessary to inspect or replace the wearing parts, follow these instructions which are keyed to the illustrations (see Figures 1 and 2) and the accompanying parts lists.

This manual will alert personnel to known procedures which require special attention, to those which could damage equipment, and to those which could be dangerous to personnel. However, this manual cannot possibly anticipate and provide detailed precautions for every situation that might occur during maintenance of the unit. Therefore, it is the responsibility of the owner/maintenance personnel to ensure that **only** safe, established maintenance procedures are used, and that any procedures not addressed in this manual are performed **only** after establishing that neither personal safety nor pump integrity are compromised by such practices.

Many service functions may be performed by draining the pump and removing the back cover assembly. If major repair is required, the piping and/or power source must be disconnected. The following instructions assume complete disassembly is required.

Before attempting to service the pump, disconnect or lock out the power source and take precautions to ensure that it will remain inoperative. Close all valves in the suction and discharge lines.

For power source disassembly and repair, consult the literature supplied with the power source, or contact your local power source representative.

WARNING!

Before attempting to open or service the pump:

1. **Familiarize yourself with this manual.**
2. **Disconnect or lock out the power source to ensure that the pump will remain inoperative.**
3. **Allow the pump to completely cool if overheated.**
4. **Check the temperature before opening any covers, plates, or plugs.**
5. **Close the suction and discharge valves.**
6. **Vent the pump slowly and cautiously.**
7. **Drain the pump.**

WARNING!

Death or serious personal injury and damage to the pump or components can occur if proper lifting procedures are not observed. Make certain that hoists, chains, slings or cables are in good working condition and of sufficient capacity and that they are positioned so that loads will be balanced and the pump or components will not be damaged when lifting. Suction and discharge hoses and piping must be removed from the pump before lifting. Lift the pump or component only as high as necessary and keep personnel away from suspended objects.

Back Cover and Wear Plate Removal

(Figure 1)

The wear plate (6) is easily accessible and may be serviced by removing the back cover (5). Before attempting to service the pump, remove the pump casing drain plugs (28) and drain the pump. Clean and reinstall the drain plugs.

non potable pumps

Remove the back cover nuts (13) and pry the back cover and assembled wear plate from the pump casing (1).

NOTE

An alternate method of removing the back cover from the pump casing is to remove the back cover nuts (13) and two diagonally opposing locking collars (11). Install two 1/2—13 UNC—2B x 2 inch long screws in the tapped holes in the back cover and use them to press the back cover out of the pump casing.

Inspect the back cover and wear plate O-rings (29 and 29A) and replace them if damaged or worn.

Inspect the wear plate and replace it if badly scored or worn. To remove the wear plate, disengage the hardware (7 and 8).

Suction Check Valve Removal

(Figure 1)

If the check valve assembly (31) is to be serviced, remove the check valve pin (32), reach through the back cover opening and pull the complete assembly from the suction flange (27).

NOTE

Further disassembly of the check valve is not required since it must be replaced as a complete unit. Individual parts are not sold separately.

Rotating Assembly Removal

(Figure 2)

The rotating assembly may be serviced without disconnecting the suction or discharge piping; however, the power source must be removed to provide clearance.

The impeller (1) should be loosened while the rotating assembly is still secured to the pump casing. Before loosening the impeller, remove the seal cavity drain plug (26) and drain the seal lubricant. This will prevent the oil in the seal cavity from escaping when the impeller is loosened. Clean and reinstall the seal cavity drain plug.

Immobilize the impeller by wedging a block of wood between the vanes and the pump casing and remove the impeller capscrew and washer (7 and 8).

Install the shaft key (20). Install a lathe dog on the drive end of the shaft (4) with the “V” notch positioned over the shaft key.

With the impeller rotation still blocked, see Figure 3 and use a long piece of heavy bar stock to pry against the arm of the lathe dog in a counterclockwise direction (when facing the drive end of the shaft). **Use caution** not to damage the shaft or keyway. When the impeller breaks loose, remove the lathe dog, key and wood block.

NOTE

Do not remove the impeller until the rotating assembly has been removed from the pump casing.

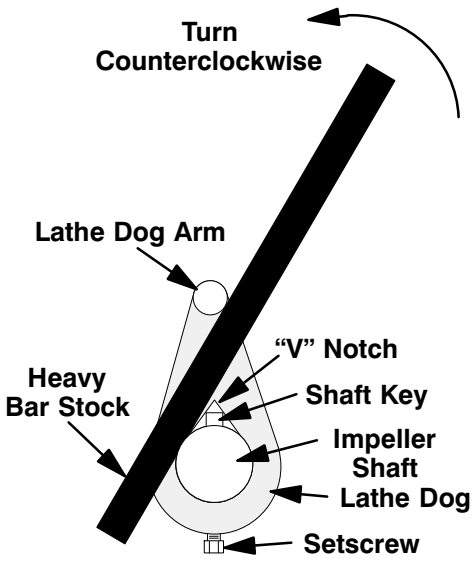

Figure 3. Loosening Impeller

(Figure 1)

Remove the hardware (3 and 4) securing the rotating assembly to the pump casing. Separate the rotating assembly by pulling straight away from the pump casing. Tie and tag the rotating assembly adjusting shims (33) for ease of reassembly.

NOTE

An optional disassembly tool is available from the factory. If the tool is used, follow the instructions packed with it. A similar tool may be assembled using 1/2-inch pipe (schedule 80 steel or malleable

non potable pumps

iron) and a standard tee (see Figure 4). All threads are 1/2-inch NPT. ***Do not pre-assemble the tool.***

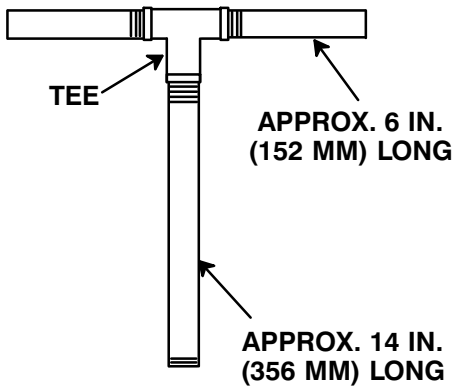

Figure 4. Rotating Assembly Tool

To install the tool, remove the vented plug (25, Figure 2) from the bearing housing, and screw the longest length of pipe into the vent hole until fully engaged. Install the tee, and screw the handles into the tee. Use caution when lifting the rotating assembly to avoid injury to personnel or damage to the assembly.

Remove the bearing housing and seal plate O-rings (29B and 29C).

Impeller Removal

(Figure 2)

With the rotating assembly removed from the pump casing, unscrew the impeller from the shaft. Use caution when unscrewing the impeller; tension on the shaft seal spring will be released as the impeller is removed. Inspect the impeller and replace if cracked or badly worn.

Remove the impeller adjusting shims (28); tie and tag the shims, or measure and record their thickness for ease of reassembly.

Seal Removal

(Figure 2)

Slide the integral shaft sleeve and rotating portion of the seal off the shaft as a unit.

Use a pair of stiff wires with hooked ends to remove the stationary element and seat.

An alternate method of removing the stationary seal components is to remove the hardware (9 and 10) and separate the seal plate (5) and gasket (11) from the bearing housing (1). Position the seal plate on a flat surface with the impeller side down. Use a wooden dowel or other suitable tool to press on the back side of the stationary seat until the seat, O-rings and stationary element can be removed.

Remove the shaft sleeve O-ring (27).

If no further disassembly is required, refer to **Seal Installation**.

Shaft and Bearing Removal and Disassembly

(Figure 2)

When the pump is properly operated and maintained, the bearing housing should not require disassembly. Disassemble the shaft and bearings **only** when there is evidence of wear or damage.

CAUTION

Shaft and bearing disassembly in the field is not recommended. These operations should be performed only in a properly-equipped shop by qualified personnel.

Remove the bearing cavity drain plug (26A) and drain the lubricant. Clean and reinstall the drain plug.

Disengage the hardware (18 and 19) and slide the bearing cap (17) and oil seal (16) off the shaft. Remove the bearing cap gasket (12) and press the oil seal from the bearing cap.

Place a block of wood against the impeller end of the shaft (4) and tap the shaft and assembled bearings (13 and 14) from the bearing housing.

Pry or press the oil seals (2 and 2A) from the bearing housing.

After removing the shaft and bearings, clean and inspect the bearings **in place** as follows.

non potable pumps

CAUTION

To prevent damage during removal from the shaft, it is recommended that bearings be cleaned and inspected **in place**. It is **strongly** recommended that the bearings be replaced **any** time the shaft and bearings are removed.

Clean the bearing housing, shaft and all component parts (except the bearings) with a soft cloth soaked in cleaning solvent. Inspect the parts for wear or damage and replace as necessary.

WARNING!

Most cleaning solvents are toxic and flammable. Use them only in a well-ventilated area free from excessive heat, sparks, and flame. Read and follow all precautions printed on solvent containers.

Clean the bearings thoroughly in **fresh** cleaning solvent. Dry the bearings with filtered compressed air and coat with light oil.

CAUTION

Bearings must be kept free of all dirt and foreign material. Failure to do so will greatly shorten bearing life. **Do not** spin dry bearings. This may scratch the balls or races and cause premature bearing failure.

Rotate the bearings by hand to check for roughness or binding and inspect the bearing balls. If rotation is rough or the bearing balls are discolored, replace the bearings.

The bearing tolerances provide a tight press fit onto the shaft and a snug slip fit into the bearing housing. Replace the bearings, shaft, or bearing housing if the proper bearing fit is not achieved.

If bearing replacement is required, remove the outboard bearing snap ring (15) and use a bearing puller to remove the bearings from the shaft.

Shaft and Bearing Reassembly and Installation

(Figure 2)

Clean the bearing housing, shaft and all component parts (except the bearings) with a soft cloth soaked in cleaning solvent. Inspect the parts for wear or damage as necessary.

WARNING!

Most cleaning solvents are toxic and flammable. Use them only in a well ventilated area free from excessive heat, sparks, and flame. Read and follow all precautions printed on solvent containers.

Inspect the shaft for distortion, nicks or scratches, or for thread damage on the impeller end. Dress small nicks and burrs with a fine file or emery cloth. Replace the shaft if defective.

Position the inboard oil seal (2A) in the bearing housing bore with the lip positioned as shown in Figure 2. Press the oil seal into the housing until the face is **just flush** with the counterbored surface toward the inside of the housing.

Position the outboard oil seal (2) in the bearing housing bore with the lip positioned as shown in Figure 2. Press the oil seal into the housing until the face is **just flush** with the counterbored surface toward the outside of the housing.

CAUTION

To prevent damage during removal from the shaft, it is recommended that bearings be cleaned and inspected **in place**. It is **strongly** recommended that the bearings be replaced **any** time the shaft and bearings are removed.

NOTE

Position the inboard bearing (13) on the shaft with the shielded side toward the impeller end of the

non potable pumps

shaft. Position the outboard bearing (14) on the shaft with the integral retaining ring on the bearing O.D. toward the drive end of the shaft.

The bearings may be heated to ease installation. An induction heater, hot oil bath, electric oven, or hot plate may be used to heat the bearings. Bearings should **never** be heated with a direct flame or directly on a hot plate.

NOTE

*If a hot oil bath is used to heat the bearings, both the oil and the container must be **absolutely** clean. If the oil has been previously used, it must be **thoroughly** filtered.*

Heat the bearings to a uniform temperature **no higher than** 250°F (120°C) and slide the bearings onto the shaft, one at a time, until they are fully seated. This should be done quickly, in one continuous motion, to prevent the bearings from cooling and sticking on the shaft.

After the bearings have been installed and allowed to cool, check to ensure that they have not moved away from the shaft shoulders in shrinking. If movement has occurred, use a suitably sized sleeve and a press to reposition the bearings against the shaft shoulders.

If heating the bearings is not practical, use a suitably sized sleeve and an arbor (or hydraulic) press to install the bearings on the shaft.

CAUTION

When installing the bearings onto the shaft, **never** press or hit against the outer race, balls, or ball cage. Press **only** on the inner race.

Secure the outboard bearing on the shaft with the bearing snap ring (15).

Slide the shaft and assembled bearings into the bearing housing until the retaining ring on the outboard bearing seats against the bearing housing.

CAUTION

When installing the shaft and bearings into the bearing bore, push against the outer race. **Never** hit the balls or ball cage.

Press the oil seal (16) into the bearing cap (17) with the lip positioned as shown in Figure 2. Replace the bearing cap gasket (12) and secure the bearing cap with the hardware (18 and 19). **Be careful** not to damage the oil seal lip on the shaft keyway.

Lubricate the bearing housing as indicated in **LUBRICATION**.

Seal Installation

(Figures 2, 5, 6 and 7)

WARNING!

Most cleaning solvents are toxic and flammable. Use them only in a well ventilated area free from excessive heat, sparks, and flame. Read and follow all precautions printed on solvent containers.

Clean the seal cavity and shaft with a cloth soaked in fresh cleaning solvent. Inspect the stationary seat bore in the seal plate for dirt, nicks and burrs, and remove any that exist. The stationary seat bore **must** be completely clean before installing the seal.

CAUTION

A new seal assembly should be installed **any time** the old seal is removed from the pump. Wear patterns on the finished faces cannot be realigned during reassembly. Reusing an old seal could result in premature failure.

To ease installation of the seal, lubricate the shaft sleeve O-ring and the external stationary seat O-ring with a very **small** amount of light lubricating oil. See Figure 5 for seal part identification.

non potable pumps

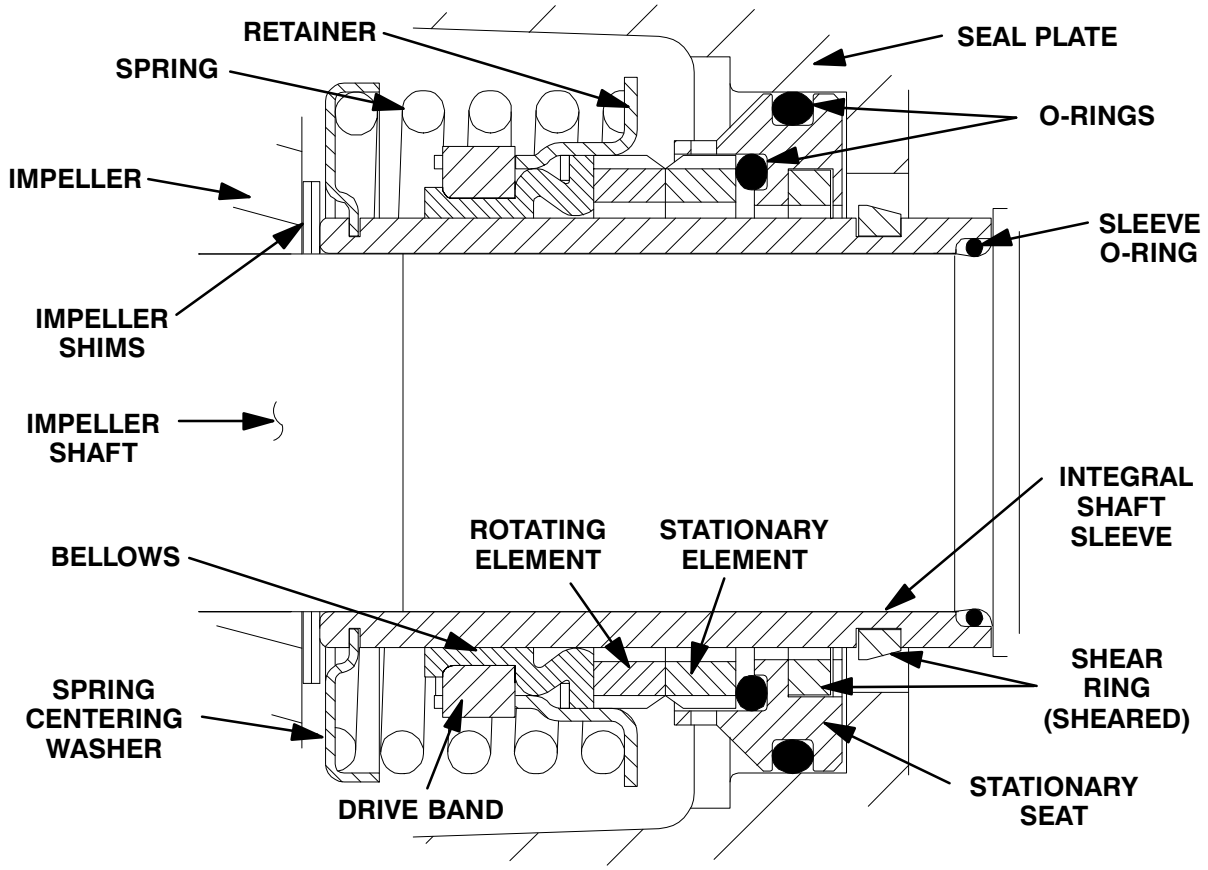

Figure 5. Cartridge Seal Assembly

CAUTION

This seal is not designed for operation at temperatures above 160°F (71°C). Do not use at higher operating temperatures.

If the seal plate (5) was removed, install the seal plate gasket (11). Position the seal plate over the shaft and secure it to the bearing housing with the hardware (9 and 10).

To prevent damaging the shaft sleeve O-ring (27) on the shaft threads, cover the threads with electrical or duct tape. Slide the O-ring over the shaft until it seats against the shaft shoulder. Remove the tape covering the threads. Check to ensure that the shaft threads are free of any tape residue and clean as required before proceeding with seal installation.

When installing a new cartridge seal assembly, remove the seal from the container, and remove the mylar storage tabs from between the seal faces.

Lubricate the external stationary seat O-ring with light oil. Slide the seal assembly onto the shaft until the external stationary seat O-ring engages the bore in the seal plate.

Clean and inspect the impeller as described in **Impeller Installation and Adjustment**. Install the full set of impeller shims (28) provided with the seal, and screw the impeller onto the shaft until it is seated against the seal (see Figure 6).

non potable pumps

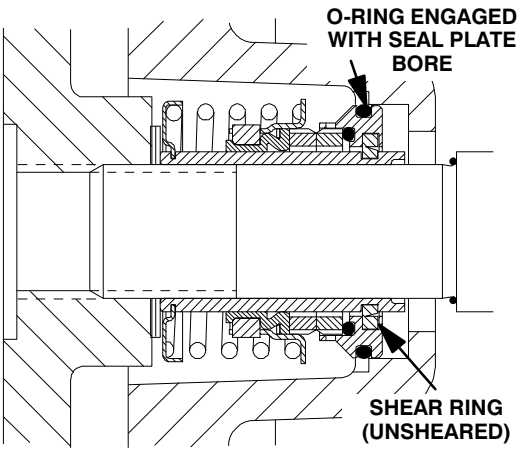

Figure 6. Seal Partially Installed

Continue to screw the impeller onto the shaft. This will press the stationary seat into the seal plate bore.

NOTE

A firm resistance will be felt as the impeller presses the stationary seat into the seal plate bore.

As the stationary seat becomes fully seated, the seal spring compresses, and the shaft sleeve will break the nylon shear ring. This allows the sleeve to slide down the shaft until seated against the shaft shoulder. Continue to screw the impeller onto the shaft until the impeller, shims, and sleeve are fully seated against the shaft shoulder (see Figure 7).

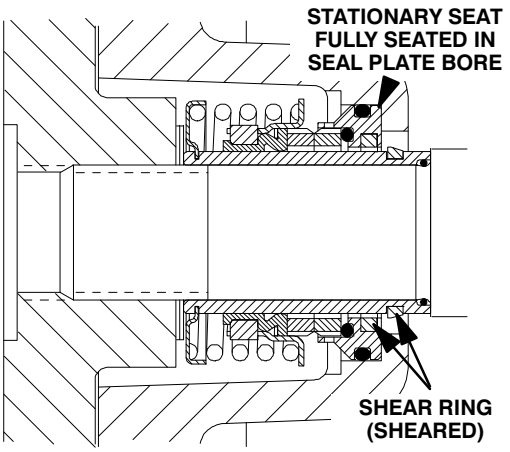

Figure 7. Seal Fully Installed

Measure the impeller-to-seal plate clearance, and remove impeller adjusting shims to obtain the proper clearance as described in **Impeller Installation and Adjustment**.

If necessary to reuse an old seal in an emergency, carefully separate the rotating and stationary seal faces from the bellows retainer and stationary seat.

CAUTION

A new seal assembly should be installed **any time** the old seal is removed from the pump. Wear patterns on the finished faces cannot be realigned during reassembly. Reusing an old seal could result in premature failure.

Handle the seal parts with extreme care to prevent damage. Be careful not to contaminate precision finished faces; even fingerprints on the faces can shorten seal life. If necessary, clean the faces with a non-oil based solvent and a clean, lint-free tissue. Wipe **lightly** in a concentric pattern to avoid scratching the faces.

Carefully wash all metallic parts in fresh cleaning solvent and allow to dry thoroughly.

CAUTION

Do not attempt to separate the rotating portion of the seal from the shaft sleeve when reusing an old seal. The rubber bellows will adhere to the sleeve during use, and attempting to separate them could damage the bellows.

Inspect the seal components for wear, scoring, grooves, and other damage that might cause leakage. Inspect the integral shaft sleeve for nicks or cuts on either end. If any components are worn, or the sleeve is damaged, replace the complete seal; **never mix old and new seal parts**.

Install the stationary seal element in the stationary seat. Press this stationary subassembly into the seal plate bore until it seats squarely against the bore shoulder. A push tube made from a piece of plastic pipe would aid this installation. The I.D. of the pipe should be slightly larger than the O.D. of the shaft sleeve.

non potable pumps

Slide the rotating portion of the seal (consisting of the integral shaft sleeve, spring centering washer, spring, bellows and retainer, and rotating element) onto the shaft until the seal faces contact.

Proceed with **Impeller Installation and Adjustment**.

Impeller Installation and Adjustment

(Figure 2)

Inspect the impeller and replace it if cracked or badly worn. Inspect the impeller and shaft threads for dirt or damage, and clean or dress the threads as required.

CAUTION

The shaft and impeller threads **must** be completely clean before reinstalling the impeller. Even the slightest amount of dirt on the threads can cause the impeller to seize to the shaft, making future removal difficult or impossible without damage to the impeller or shaft.

Install the same thickness of impeller adjusting shims as previously removed. Apply 'Never-Seez' or equivalent to the shaft threads and screw the impeller onto the shaft until tight. Be sure the seal spring seats squarely over the shoulder on the back side of the impeller.

NOTE

At the slightest sign of binding, immediately back the impeller off, and check the threads for dirt. ***Do not*** *try to force the impeller onto the shaft*.

A clearance of .025 to .040 inch (0,64 to 1,02 mm) between the impeller and the seal plate is recommended for maximum pump efficiency. Measure this clearance and add or remove impeller adjusting shims as required.

NOTE

If the rotating assembly has been installed in the pump casing, this clearance may be measured by reaching through the priming port with a feeler gauge.

Proceed with ***Rotating Assembly Installation*** *before installing the impeller capscrew and washer (7 and 8). The rotating assembly must be installed in the pump casing in order to torque the impeller capscrew.*

After the rotating assembly is installed in the pump casing, coat the threads of the impeller capscrew (8) with 'Never-Seez' or equivalent compound, and install the impeller washer (7) and capscrew; torque the capscrew to 90 ft. lbs. (1080 in. lbs. or 12,4 m. kg.).

Rotating Assembly Installation

(Figure 1)

Install the seal plate and bearing housing O-rings (29B and 29C) and lubricate them with light grease. Ease the rotating assembly into the pump casing using the installation tool. **Be careful** not to damage the O-ring.

Install the same thickness of rotating assembly adjusting shims (33) as previously removed and secure the rotating assembly to the pump casing with the hardware (3 and 4).

To set the impeller and wear plate clearance, refer to **Back Cover and Wear Plate Installation and Adjustment**.

Suction Check Valve Installation

(Figure 1)

Inspect the check valve assembly (31) and replace it if badly worn.

NOTE

The check valve assembly must be replaced as a complete unit. Individual parts are not sold separately.

Reach through the back cover opening with the check valve and position the check valve adaptor in the mounting slot in the suction flange (27). Align the adaptor with the flange hole and secure the assembly with the check valve pin (32).

NOTE

If the suction or discharge flanges were removed, replace the respective gaskets, apply 'Permatex

non potable pumps

Aviation No. 3 Form-A-Gasket' or equivalent compound to the mating surfaces, and secure them to the pump casing with the attaching hardware.

Back Cover and Wear Plate Installation and Adjustment

(Figures 1 and 5)

If the wear plate (6) was removed for replacement, carefully center it on the suction back cover and secure it with the hardware (7 and 8). The wear plate **must** be concentric to prevent binding when the back cover is installed.

Clearance between the impeller and wear plate is adjusted using four adjusting screws and locking collars. There are 18 detents on the I.D. of each locking collar. Indexing the collars one detent on the adjusting screws represents approximately .005 inch (0,13 mm) of wear plate clearance. The recommended clearance between the wear plate and the impeller is .003 to .010 inch (0,07 to 0,25 mm).

Replace the back cover and wear plate O-rings (29 and 29A) and lubricate them with a generous amount of No. 2 grease. Clean any scale or debris from the contacting surfaces in the pump casing that might interfere or prevent a good seal with the back cover.

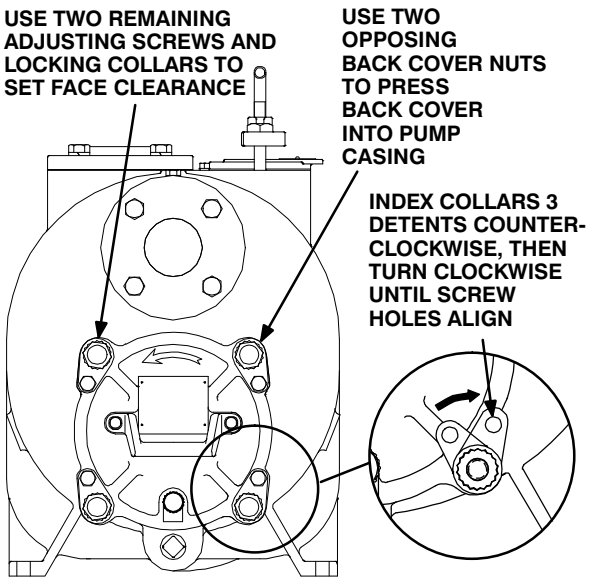

Figure 8. Installing and Adjusting Back Cover

Screw the four adjusting screws (9) into the tapped holes in the suction back cover plate until they are **just flush** with the machined surface on the back side of the cover plate.

Align the back cover plate over the studs (10) and slide it into the pump casing. Use two back cover nuts (13) on diagonally opposing studs to press the suction back cover into the pump casing until the wear plate **just touches** the impeller when the shaft is turned by hand. **Tighten the back cover nuts evenly to avoid binding.**

With the wear plate just touching the impeller, turn the two free adjusting screws until they engage the pump casing. Position the locking collars over the adjusting screws so the holes in the collars for the locking screws align approximately with the holes in the cover plate.

Loosen the back cover nuts used to press the suction back cover into the pump casing one full turn.

Pull the collars off the adjusting screws, index them three detents counterclockwise, and reinstall the collars on the adjusting screws. Use the collars to turn the adjusting screws clockwise until the holes in the locking collars realign with the tapped screw holes in the suction back cover plate. Secure the locking collars to the suction back cover plate with the hardware (3 and 12). Install the two remaining back cover nuts snugly against the adjusting screws.

Remove the first two back cover nuts from their studs. Turn the adjusting screws clockwise until they engage the pump casing. Install the locking collars and hardware (3, 11 and 12). Reinstall the back cover nuts.

Be sure the wear plate does not scrape against the impeller.

Over time it may be necessary to repeat the adjustment process to compensate for normal wear between the impeller and wear plate. When all of the adjustment has been used on the suction back cover side of the pump, an additional 0.125 inch (3,2 mm) of adjustment may be obtained by removing the rotating assembly adjusting shims (33).

Allow an installed pump to completely cool before draining liquid from the pump casing. Remove the

non potable pumps

back cover. Remove the rotating assembly adjusting shims, then reinstall the hardware securing the rotating assembly to the pump casing. Perform the suction back cover adjustment procedure described above to obtain the proper face clearance.

PRESSURE RELIEF VALVE MAINTENANCE

(Figure 1)

The back cover is equipped with a pressure relief valve to provide additional safety for the pump and operator (refer to **Liquid Temperature and Overheating** in **OPERATION**).

It is recommended that the pressure relief valve assembly be replaced at each overhaul, or any time the pump overheats and activates the valve. **Never** replace this valve with a substitute which has not been specified or provided by the Gorman-Rupp Company.

Periodically, the valve should be removed for inspection and cleaning. When reinstalling the relief valve, apply 'Loctite Pipe Sealant With Teflon No. 592', or equivalent compound, on the relief valve threads. Position the valve as shown in Figure 1 with the discharge port pointing down.

Final Pump Assembly

(Figure 1)

If the suction or discharge flanges (23 or 27) were removed, replace the gaskets (17 and 22). Apply 'Permatex Aviation No. 3 Form-A-Gasket' or equivalent to the mating surfaces and secure the flanges to the pump casing (1) with the attaching hardware (24, 25 and 30).

NOTE

There is a threaded passage through the interior wall of the pump casing just in front of the blind flange assembly. This passage is designed to equalize pressure in the casing when the pump is in operation, and ***must be kept clear.***

Install the shaft key (20, Figure 2) and reconnect the power source. Be sure to install any guards used over the rotating members.

WARNING!

Do not operate the pump without the guards in place over the rotating parts. Exposed rotating parts can catch clothing, fingers, or tools, causing severe injury to personnel.

Install the suction and discharge lines and open all valves. Make certain that all piping connections are tight, properly supported and secure.

Be sure the pump and power source have been properly lubricated, see **LUBRICATION**.

Remove the fill cover assembly (18) and fill the pump casing with clean liquid. Reinstall the fill cover and tighten it. Refer to **OPERATION**, Section C, before putting the pump back into service.

LUBRICATION

Seal Assembly

(Figure 2)

Before starting the pump, remove the vented plug (25) and fill the seal cavity with approximately 40 ounces (1,2 liters) of SAE No. 30 non-detergent oil to the middle of the sight gauge (21) and maintain it at the middle of the gauge. Clean and reinstall the vented plug. Maintain the oil at this level.

Bearings

(Figure 2)

The bearing housing was fully lubricated when shipped from the factory. Check the oil level regularly through the sight gauge (21A) and maintain it at the middle of the gauge. When lubrication is required, add SAE No. 30 non-detergent oil through the hole for the air vent (24). **Do not** over-lubricate. Over-lubrication can cause the bearings to overheat, resulting in premature bearing failure.

Under normal conditions, drain the bearing housing once each year and refill with approximately 10 ounces (0,3 liter) clean oil. Change the oil more frequently if the pump is operated continuously or installed in an environment with rapid temperature change.

non potable pumps



Monitor the condition of the bearing lubricant regularly for evidence of rust or moisture condensation. This is especially important in areas where variable hot and cold temperatures are common.

For cold weather operation, consult the factory or a lubricant supplier for the recommended grade of oil.

Power Source

Consult the literature supplied with the power source, or contact your local power source representative.

For U.S. and International Warranty Information,
Please Visit www.grpumps.com/warranty
or call:
U.S.: 419—755—1280
International: +1—419—755—1352

For Canadian Warranty Information,
Please Visit www.grcanada.com/warranty
or call:
519—631—2870

non potable pumps

SINGLE AND MULTIPLE PUMP LIFT STATION LESS ENCLOSURE INSTALLATION MANUAL

GORMAN-RUPP PUMPS

GORMAN-RUPP PUMPS

ENGINEERED SYSTEMS

THE GORMAN-RUPP COMPANY • MANSFIELD, OHIO
GORMAN-RUPP OF CANADA LIMITED • ST. THOMAS, ONTARIO, CANADA Printed in U.S.A
www.grpumps.com.
©1979 The Gorman-Rupp Company

non potable pumps

SINGLE AND MULTIPLE PUMP LIFT STATION
LESS ENCLOSURE
INSTALLATION INSTRUCTIONS

INTRODUCTION

This document provides important information for personnel responsible for the installation of your Gorman-Rupp lift station.

This station has been operated and thoroughly tested at the factory to ensure that it meets your pumping requirements and is ready for installation.

Please read this manual completely before installing the station. If the procedures in this manual are followed carefully, your Gorman-Rupp lift station will provide years of continuous service.

This manual covers the basic lift station. Your station may include equipment not covered in these instructions. All phases of the installation should be in compliance with applicable codes and performed in a workmanlike manner.

The driver of the truck delivering the station will have an Operation and Maintenance Manual for the specific station. This manual will be helpful in installing the station.

WARRANTY INFORMATION

The warranty provided with your pump station is part of Gorman-Rupp's support program for customers who install, operate and maintain their equipment as described in this and the other accompanying literature. Please note that should the equipment be abused, damaged or modified to change its performance beyond the original factory specifications, the warranty will become void and any claim will be denied.

The following are used to alert personnel to procedures which require special attention, to those which could damage equipment, and to those which could be dangerous to personnel:

DANGER!

Immediate hazards which WILL result in severe personal injury or death. These instructions describe the procedure required and the injury which will result from failure to follow the procedure.

WARNING!

Hazards or unsafe practices which COULD result in severe personal injury or death. These instructions describe the procedure required and the injury which could result from failure to follow the procedure.

CAUTION

Hazards or unsafe practices which COULD result in minor personal injury or product or property damage. These instructions describe the requirements and the possible damage which could result from failure to follow the procedure.

NOTE

Instructions to aid in installation, operation, and maintenance or which clarify a procedure.

non potable pumps

CONTENTS

SAFETY ..... PAGE 2
SITE PREPARATION ..... PAGE 3
Electrical ..... PAGE 3
Pad Preparation ..... PAGE 3
Lifting Equipment ..... PAGE 3
PRE-INSTALLATION INSPECTION ..... PAGE 3
OFF-LOADING ..... PAGE 3
TEMPORARY STORAGE ..... PAGE 4
PIPING INSTALLATION ..... PAGE 5
Suction and Discharge Piping ..... PAGE 6
Water Hammer Arrestor ..... PAGE 6
Air Bubbler Liquid Level Control Lines ..... PAGE 7
ELECTRICAL SERVICE CONNECTION ..... PAGE 7
FINAL INSTALLATION INSPECTION ..... PAGE 7
ILLUSTRATIONS
Figure 1. Anchor Hardware Installation ..... PAGE 4
Figure 2. Lifting Station With Slings ..... PAGE 8
Figure 3. Typical Installation ..... PAGE 9

SAFETY

This information applies to the Gorman-Rupp Duplex Lift Station covered in this manual.

DANGER!

The electrical power used to operate this station is high enough to cause injury or death. Obtain the services of a qualified electrician to make all electrical connections.

WARNING!

Install and operate this station in accordance with the National Electrical Code and all local codes. Ground the unit before applying line potential. Failure to follow the instructions in this warning and manual could result in injury or death to personnel.

WARNING!

The electrical power to operate the equipment in this station is high enough to cause injury or death. Shut down incoming power and tag and lock all controls to prevent accidental startup during maintenance or repair of the equipment. The equipment in this station utilizes more than one source of power and therefore more than one disconnect may be required to completely de-energize all equipment being serviced.

The equipment in this station is designed for automatic control and can start without warning unless all circuits are de-energized. Failure to shut down and lock out power can result in death, serious personal injury or damage to the equipment.

non potable pumps

SITE PREPARATION

WARNING!

In the event of conflict between the instructions contained in this section and The National Electrical Code or local codes, The National Electrical Code or local codes shall take precedence.

Electrical

Notify the local power company in advance to assure that electrical power will be provided to the site before arrival of the lift station. Verify that incoming service is in conformance with design specifications on the electrical wiring diagram, ± 10%. Where local codes permit, it is strongly recommended that power lines to the station terminate in a service entrance disconnect outside the station.

Pad Preparation

It is recommended that construction of the wet well and lift station pad be completed before the station arrives. If this work has not been completed, or if the station will not be installed immediately, it should remain sealed as shipped from the factory.

The lift station pad and wet well must be constructed in accordance with design specifications. The pad should be fitted with anchor bolts and piping holes in accordance with the pad engineering drawing.

The mounting surface and surrounding area of the pad must be free of all foreign material and debris before the station is set in place. Even a small amount of debris on the pad can affect piping installation and station leveling.

Remove all construction debris from the wet well, piping and manholes. If debris is not removed, stoppages will occur and could result in damage to pumps and valves. Lift station collection lines flowing to the wet well should be flushed and debris removed.

Lifting Equipment

Arrange to have proper unloading equipment available upon arrival of the station.

Lifting equipment must include a four (4) point sling system of sufficient strength and a minimum of 12 feet (3,7 m) long. **The overall weight of a duplex lift station will not exceed 10,000 lbs. (4500 kg.).** Slings and lifting equipment must be rated for at least the load of the station **plus a minimum safety factor of 4 times the weight of the station**.

Consult the factory for the weight of a single pump or three or more pumps on a common base.

PREINSTALLATION INSPECTION

The lift station was thoroughly inspected before leaving the factory and was complete and operational when shipped. Loading and tie down were supervised by Gorman-Rupp personnel and the bed of the carrier was padded, if necessary, to protect the station. In spite of all precautions however, damage to the station may have occurred in transit and the station should be inspected before being off-loaded.

Before unloading, make a thorough check to assure that the station has not been damaged during transit.

OFF-LOADING

WARNING!

Make certain that the lifting equipment and sling are of an adequate capacity, plus an appropriate safety factor (a minimum of 4 times the weight of the station), to support the weight of the station.

Do not push or slide the station off the truck bed. Each station contains a control panel with sensitive electrical components. Avoid rough handling, and use caution to prevent undue shock and vibration to the station.

If possible, position the lifting equipment so that the station can be lifted and set on the pad without

non potable pumps

moving the lifting equipment. Make certain that the lifting equipment is on a solid surface and stabilizers are in position.

Check that the angle of lift will not de-rate the lifting equipment below the required capacity.

WARNING!

When the pump station is suspended, keep personnel from beneath it at all times.

CAUTION

The station base is equipped with lifting holes at each corner. Use **only** the four (4) lifting holes to lift the station. Failure to do so may result in serious damage to the station equipment.

Make all lifts as smoothly as possible. Lower the station onto the pad using a four (4) point sling system (see Figure 2).

CAUTION

Do not use blocks or shims between the lift station base and the pad. The station is designed for proper installation only then the station base is level on the wet well.

WARNING!

All regulations established by the Occupational Safety and Health Administration (OSHA) for confined spaces must be followed when working on the wet well and/or piping. Failure to do so could result in serious injury or death to personnel.

When lowering the station onto the pad, extreme care must be taken not to damage the anchor bolts and/or any piping already installed above the level of the pad.

After the station has been lowered onto the pad, do not remove the sling until the positions of the anchor bolts and piping holes have been checked for alignment; repeat short lifts as often as necessary until these features are aligned.

After the station is properly seated on the pad, remove the slings.

To secure the station to the pad, place washers and nuts on each anchor bolt. Tighten the nuts securely, ensuring that at least two full threads of each anchor bolt shows above each nut (see Figure 1).

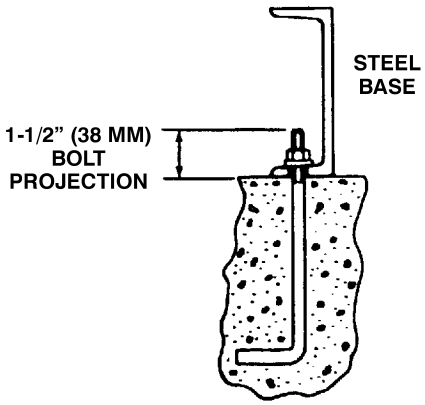

Figure 1. Anchor Hardware Installation

The station base is designed to be grouted to fill the void between the base and the concrete floor, should shims or leveling bolts be required to compensate for an uneven floor.

Grouting of the complete base cavity is not required, as the base is designed to prevent flexing or warping under normal operating conditions.

TEMPORARY STORAGE

CAUTION

If the station is to be stored for an extended period of time before installation, or if it is to be installed without being put into operation for an extended period of time, temporary power must be applied to the control system to prevent damage.

If the station will not be installed on the pad immediately, place the station on a level surface of smooth, clean planks or similar support. **Do not** place the

non potable pumps

station on uneven or rocky terrain. Ensure that the site is high enough to keep the station above ground water level. **Make sure** the station is protected against vandalism during storage.

WARNING!

All electrical equipment in the pump station is grounded to the control panel sub-plate. Before applying line potential, connect the main ground lug terminal on the sub-plate in the pump station control panel to a driven earth ground according to the National Electrical Code and all local codes. Failure to do so can result in serious personal injury or death.

CAUTION

Temporary power must be 60 Hz. single phase and cannot exceed 115 volts, ± 10%. Severe damage to the station electrical circuits can result if voltage exceeds design conditions.

Connect 60 Hz., 115-volt, single phase service to the control center in accordance with the schematic circuit diagram provided with the station. Energize the pump station accessories as recommended in the pump station Operation and Service Manual.

PIPING INSTALLATION

WARNING!

All regulations established by the Occupational Safety and Health Administration (OSHA) for confined spaces must be followed when working on the wet well and/or piping. Failure to do so could result in serious injury or death to personnel.

WARNING!

Automatic control features of the system can cause the pumps to start without warning. If line potential has been applied to the pump station, make certain that the main service disconnect is locked in the OFF position before working on the system piping. If no main service entrance disconnect has been installed, make certain that all circuits on the control panel are locked open.

When working with liquids that produce hazardous fumes, make certain that the wet well is adequately ventilated and/or protective breathing apparatus is worn. Protective clothing must always be worn.

WARNING!

Do not allow any unprotected part of the body to come into contact with liquids being pumped; serious illness or disease could result. Clean tools and protective clothing after exposure. Gases present in wet wells may be extremely hazardous; do not work in an unventilated area without protective breathing apparatus.

Clean debris from the wet well before and after piping installation. Debris can cause pump and/or valve damage. Flush pump station collection lines flowing into the wet well and remove any debris.

CAUTION

Damage to the pump or valves resulting from debris in the suction line will not be covered under warranty.

Carefully check the wet well and piping and remove all debris, including construction debris such as nuts, bolts, wire, weld slag, and other foreign material. Flush pump station collection lines flowing into the wet well before connecting the suction and dis-

non potable pumps

charge piping to prevent debris from entering the pump.

Suction and Discharge Piping

Suction and discharge piping must be installed so that no mechanical load is placed on the pumps; the pump housing could be damaged from transferred mechanical loads. If these lines are not supported by the configuration of the wet well, they must be supported by concrete blocks, piers or both. Supports must be anchored securely to prevent dislocation during backfill operations.

To eliminate pipe strain and stresses due to soil condition or due to changes in flow direction, the force main piping will require thrust blocks. Size, style and placement of thrust blocks should be as indicated by the engineer's plans and specifications.

CAUTION

Limit the horizontal length of suction lines to the wet well. Suction lines must slope downward to the wet well from the station (see Figure 3).

Suction lines should never slope down to the pump. Short horizontal runs can be tolerated if unavoidable, but ideally, suction lines should slope down from the pump a minimum of 2°. Suction lines must be air-tight to ensure efficient operation and priming and to avoid possible damage to the pump.

If an increasing elbow or other device is installed on the end of the suction line, make certain that it is cemented or otherwise firmly anchored in the wet well.

If a pressure test of the force main is to be performed, the lift station must be isolated. The 3-way valve in the station will provide dead tight shutoff of 35 psi (2,5 kg/cm^2) maximum. Failure to isolate the lift station may cause pump damage and station flooding.

Discharge lines should be air-tight to prevent the liquid being pumped from entering the station or leaking into the surrounding ground. If gauges or other instruments are installed in the pump or piping, make certain that all connections are air-tight and sealed using "Loctite Pipe Sealant with Teflon" or equivalent compound.

Suction and discharge lines in the wet well are connected to piping in the station with 125 lb. flanges. Make certain that these mating flanges are squarely seated before tightening them; never pull piping into place by tightening connecting hardware.

Water Hammer Arrestor

In installations where the length, rise or profile of the force main may cause destructive hydraulic shock, a Water Hammer Arrestor should have been specified. The device will control these concussions and prevent the rupturing of pumps, valves or piping.

If a Water Hammer Arrestor has been specified, make certain that it is installed and functioning properly before the lift station is placed in operation.

CAUTION

Air release lines or valves furnished with the lift station **are not** designed to act as shock arrestors, and are not intended as substitutions for proper control devices.

Air Bubbler Liquid Level Control Lines

If the station is equipped with an air bubbler liquid level control system, the air bubbler pipe should extend into the center of the wet well and terminate with a tee fitting. Where possible, position the tee fitting so that the cleanout extension will be accessible from the underside of the aluminum access doors and cap the pipe tightly.

Connect the bubbler pipe to the tee fitting. Connect the air bell to the bubbler pipe. Refer to the engineer's plans and specifications to determine the proper distance between the air bell and the floor of the wet well.

CAUTION

The air bubbler pipe and cleanout exten-

non potable pumps

sion must be firmly supported and **absolutely airtight.**

ELECTRICAL SERVICE CONNECTION

WARNING!

The electrical power applied to this station is high enough to cause injury or death. Ground the station before applying line potential. Failure to do so may result in injury or death. A grounding electrode system must be available or installed and connected according to the National Electrical Code or local codes. Grounding electrodes are not furnished with this lift station.

This equipment contains more than one source of power. More than one disconnect is required to completely de-energize the lift station.

Contact the electrical contractor for service extension to the control panel. Wiring must be made in accordance with the plans and specifications per local and the National Electrical Code. The schematic wiring diagram furnished with the station must be followed in making connections to the control panel.

CAUTION

On installations where a low voltage (115 volts) tap on incoming service is specified for control circuits and auxiliary equipment, care must be taken to ensure that the tap is not made to high voltage lines. If this occurs, **severe damage to control circuits will result**. The upper voltage limit for control power is 126 volts.

All electrical equipment in the lift station is grounded to the control panel sub-plate at the factory. Before applying line potential, however, ground the control panel itself at the main ground lug terminal installed on the control panel sub-plate.

The grounded circuit conductor, or one of the transformer secondary conductors (if supplied), is to be grounded if conditions permit. Follow practices recommended in the National Electrical Code or local codes.

Terminal blocks are provided for the power connections to the lift station. Refer to the schematic wiring diagram furnished with the station.

If a remote warning and/or alarm device is to be installed outside the lift station housing, install and connect the device.

FINAL INSTALLATION INSPECTION

Ensure that all valves in the lift station are in the closed position as shipped from the factory.

Check that, where specified, a Water Hammer Arrestor has been installed, and that all pipes connected to the station are properly supported. Clean all construction debris from the wet well and pump station site area.

Verify that electrical service is properly connected.

non potable pumps

CAUTION

All four eyes **must** be used. **Approximate maximum station weight – 8,600 lbs. (3900 kg.).**

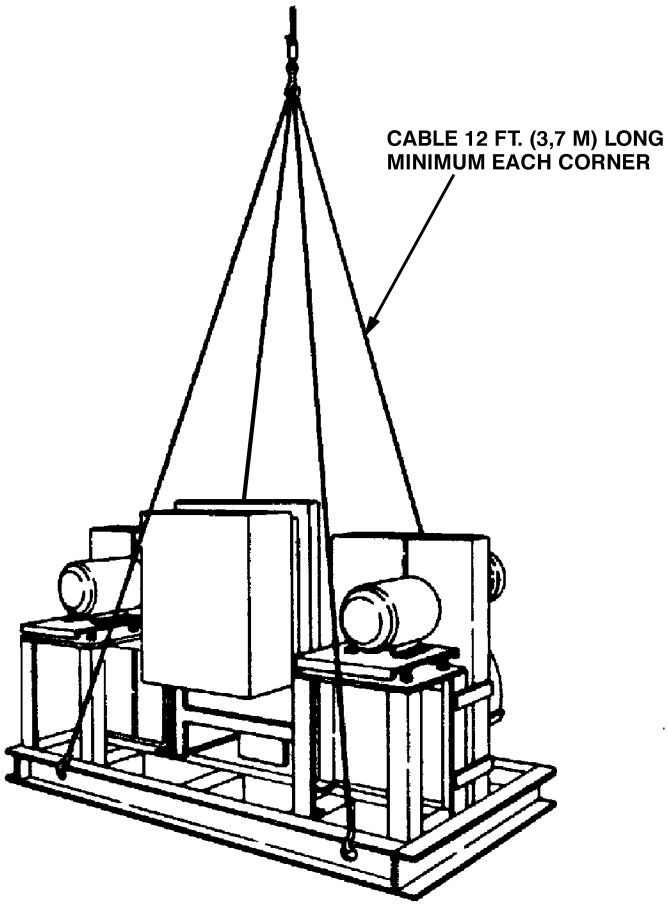

NOTE

Avoid sudden starts and stops while moving station.

Figure 2. Lifting Station With Slings

non potable pumps

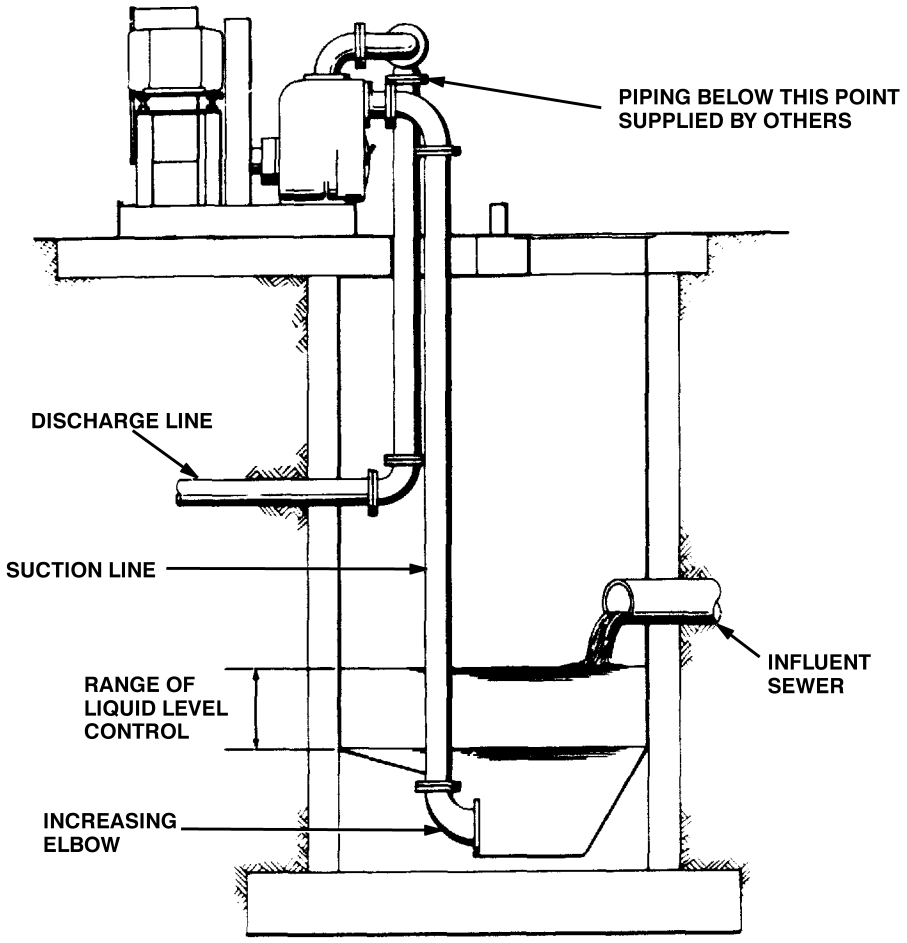

Figure 3. Typical Installation



THE GORMAN-RUPP COMPANY • MANSFIELD, OHIO

GORMAN-RUPP OF CANADA LIMITED • ST. THOMAS, ONTARIO, CANADA Printed in U.S.A

www.grpumps.com.

© The Gorman-Rupp Company

REVISIONS				
SYM.	DATE	RECORD	DR.	CK.

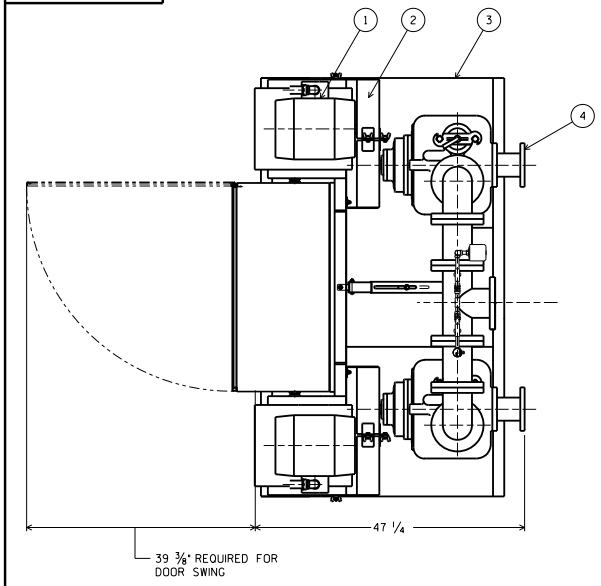

ITEM	DESCRIPTION	MAT'L & SIZE
1	MOTOR	CAST IRON
2	BELT GUARD ASSY	STEEL
3	STATION BASE ASSY	STEEL
4	PUMP	CAST IRON U3B-B
5	DISCHARGE PLUG VALVE	CAST IRON 4"
6	DISCHARGE CHECK VALVE	CAST IRON 4"
7	CONTROL PANEL FRAME	STEEL
8	CONTROL PANEL	SST 48" X 36"
9	MOTOR BASE ASSY	STEEL
10	AIR RELEASE VALVE	CAST IRON 1"
11	SYSTEM PRESSURE SWITCH	
12	HIGH DISCHARGE PRESSURE SWITCH	

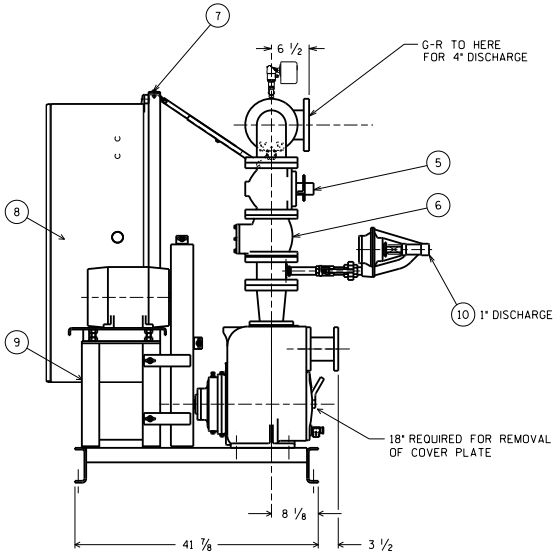

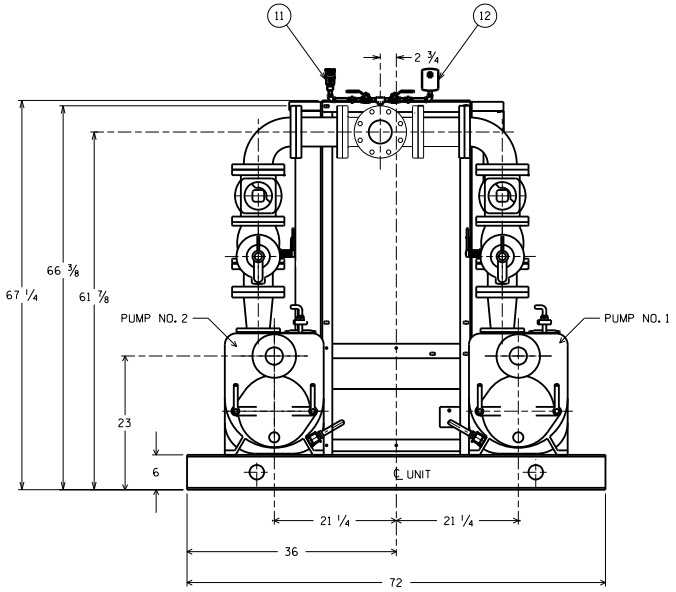

CENTER DISCHARGE

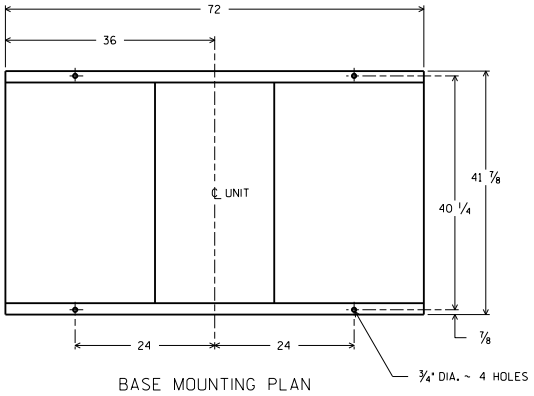

BASE MOUNTING PLAN

U3B-B 3 X 4 X 4 AS SHOWN

19269LEPB.s01

WILLIS WWTP
WILLIS, TX
SERIAL NO.: 19-269-LEPB

GORMAN-RUPP	THE GORMAN-RUPP CO. MANSFIELD, OHIO ST. THOMAS, ONTARIO			
NAME	BASE MOUNTED DUPLEX PUMP UNIT LESS ENCLOSURE			
DRN. JMR	CHK. BM	APP. BM	DATE 2-18-03	
D	60-1672		SERIAL NO. 19-269-LEPB	

non potable pumps

SHEET NO. 1 OF 3

DRAWING NO. D 4-14874

(MAIN DISCONNECT AND BRANCH CIRCUIT PROTECTION TO BE PROVIDED BY OTHERS)

480 VOLT-3 PH-60 HZ

L1 L2 L3 GND (SEE WARNING NOTE)

CT1 MCB1 1L1 M1 OL1 1T1 T1
L1 1L2 1T2 T2 15 HP PUMP MOTOR NO. 1
L2 50A 225 225 1T3 T3
L3 X1 X2 S1 S2
1L12
1L11

CT2 MCB2 2L1 M2 OL2 2T1 T1
2L1 2L2 2T2 T2 15 HP PUMP MOTOR NO. 2
2L3 200A 236 236 2T3 T3
X1 X2 S1 S2
2L12
2L11

PFR1 L1 L2 L3 PHASE FAILURE RELAY 138

TVSS1 L1 L2 L3 TRANSIENT VOLTAGE SURGE SUPPRESSOR

CB1 3L1 3L2 15A

T1 H1 H3 H2 H4 480 V PRI 3 KVA 120 V SEC

CB4 101 30A 103 X1 X2 N

CB3 15A 104 DUPLEX RECEPTACLE

CB2 15A 105

105 PFR1 15 114 18 106 PHASE FAIL ALARM RELAY CR1 A B 225 236 249 249

O/L RESET PB2 107 L3 L4 108 R1 OL1 R2 102 A1 A2

O/L RESET PB3 109 L3 L4 110 R1 OL2 R2 108 A1 A2

POWER SUPPLY
105 L N PS1 24 VDC / .6 A + - 1 2

SOLID STATE PRESSURE SWITCH
1 BRN 1 3 BLU 2
PSW2 2 WHT
4 BLK 3 3 HIGH PRESSURE SHUTDOWN RELAY CR8 2 10 2 212 203
(ON 70PSI - OFF 50 PSI)

105 TS3 PANEL HEATER THERMOSTAT 111 HTR1 N PANEL HEATER

2.00 2.00

CR4,CR5,CR6,PFR1 SHOWN IN ALARM CONDITION

NEUTRAL WIRE TO BE WHITE IN COLOR

⊡ T/B CONNECTION IN G-R PANEL
— — — WIRING BY OTHERS
⊗ EXTERNALLY MOUNTED DEVICE
◎ T/B CONNECTION IN 10X8 J/BOX

WARNING

CONNECT TO CONTROL PANEL GROUND LUG BEFORE APPLYING LINE POTENTIAL. CONTROL CIRCUIT TO BE GROUNDED BY USER IF CONDITIONS PERMIT.

SYM	DATE	DR	CK	RECORD

WILLIS WWTP NON-POTABLE STATION
WILLIS, TX
SERIAL NO. 19-269-LEPB

THE GORMAN-RUPP CO.
MANSFIELD, OHIO
ST. THOMAS, ONTARIO

DUPLEX CONTROL PANEL

DRN	CHK	DATE
SJC	lk	2/20/19

DRAWING NO. D 4-14874

SHEET NO. 1 OF 3

non potable pumps

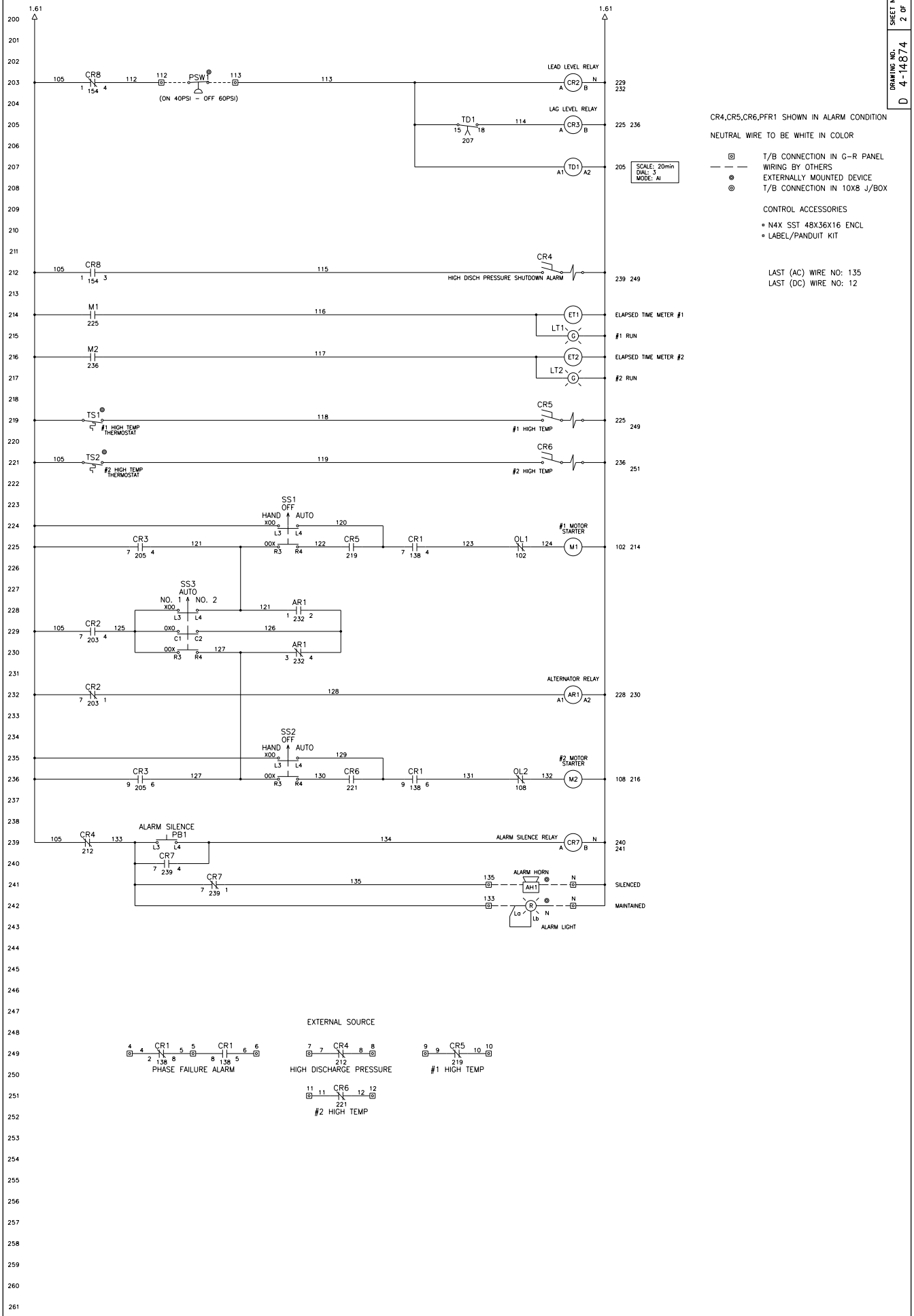

WARNING	SYM	DATE	DR	CK	RECORD	WILLIS WWTP NON-POTABLE STATION WILLIS, TX SERIAL NO. 19-269-LEPB	DUPLEX CONTROL PANEL
CONNECT TO CONTROL PANEL GROUND LUG BEFORE APPLYING LINE POTENTIAL. CONTROL CIRCUIT TO BE GROUNDED BY USER IF CONDITIONS PERMIT.						THE GORMAN-RUPP CO. MANSFIELD, OHIO ST. THOMAS, ONTARIO	DRN SJC · CHK lk · DATE 2/20/19 DRAWING NO. D 4-14874 · SHEET NO. 2 OF 3

SYM	DATE	DR	CK	RECORD

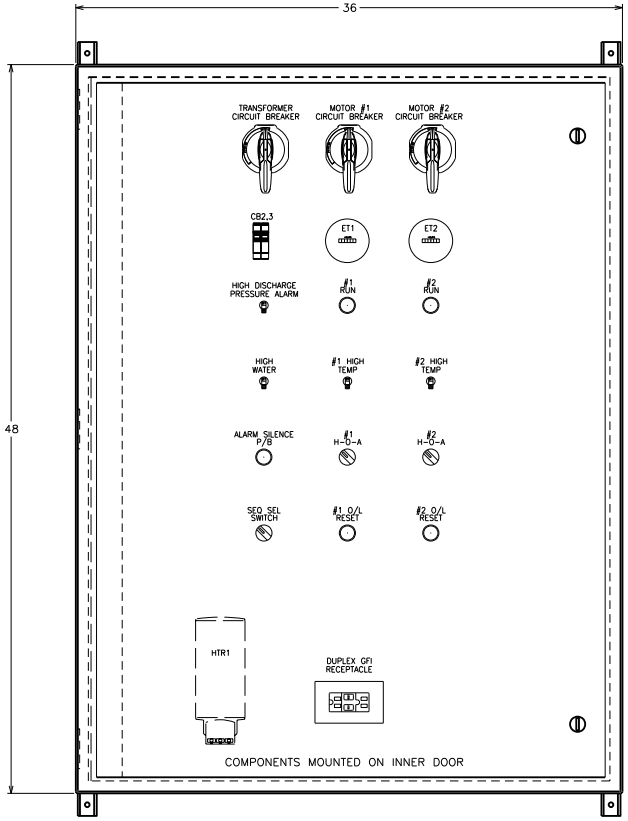

DOOR LAYOUT

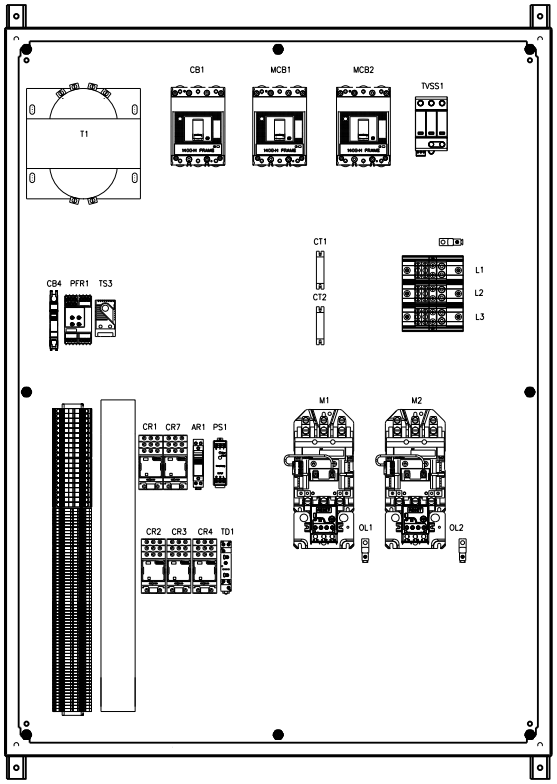

BACKPLATE LAYOUT

WILLIS WWTP NON-POTABLE STATION WILLIS, TX SERIAL NO. 19-269-LEPB	DUPLEX CONTROL PANEL		
	DRN SJC	CHK lk	DATE 2/20/19
THE GORMAN-RUPP CO. MANSFIELD, OHIO ST. THOMAS, ONTARIO	DRAWING NO. D 4-14874		SHEET NO. 3 OF 3

non potable pumps

WARRANTY COVERAGE

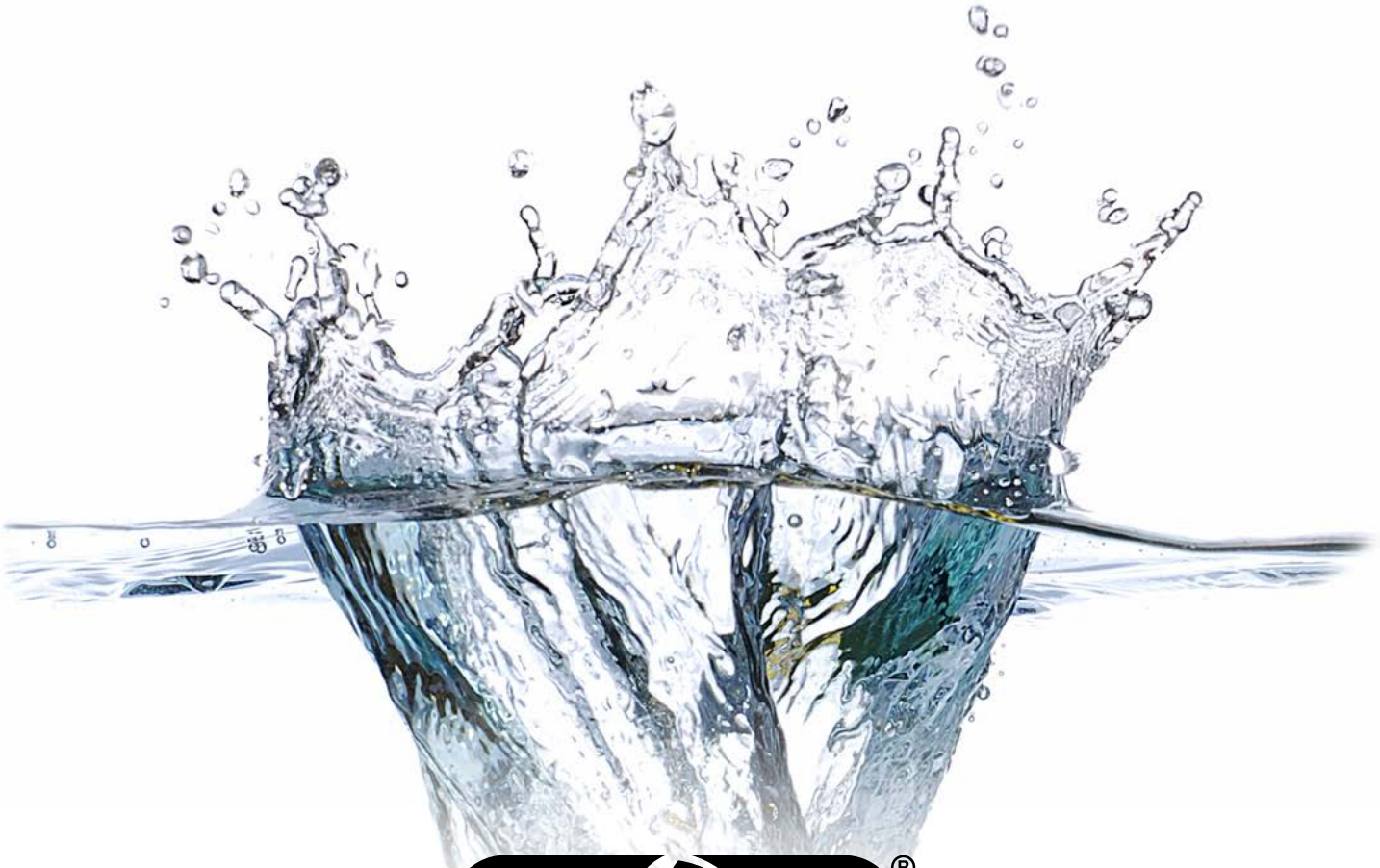

GORMAN-RUPP PUMPS

The Pump People®

EXTENT AND DURATION OF WARRANTY

COVERAGE

Gorman-Rupp Pumps (herein referred to as "Gorman-Rupp") warrant that its products and parts shall be free from defects in material and workmanship for the various periods specified in Addendum 1 – Warranty Periods beginning: (a) for pumps and parts on the date of purchase by the original end user; or (b) for pump stations, industrial pump packages and fiberglass reinforced polyester enclosures on the date of acceptance by the purchaser or the purchaser's authorized agent, or sixty (60) days after installation, or ninety (90) days after shipment from the factory, whichever occurs first. In addition to defects in material and workmanship, fiberglass reinforced polyester enclosures are warranted to be resistant to rust, corrosion, corrosive soils, effects of airborne contamination or physical failures occurring in normal service for the period of the pump station warranty. This Limited Warranty shall be valid only when installation is made and use and maintenance is performed in accordance with Gorman-Rupp recommendations. In the case of pump stations and pump packages, in order for this Limited Warranty to be valid, a Start-Up Report completed by an authorized Gorman-Rupp agent must be received by Gorman-Rupp within thirty (30) days of the initial date the unit is placed into service. An extended warranty is available on certain pump models. This extended warranty is an extension of the original warranty limited warranty. All exceptions and limitations of the original warranty, except for duration, apply to the extended warranty.

EXCEPTIONS TO COVERAGE

- This Limited Warranty shall not apply to the following products and parts: engines, motors, trade accessories and other products, components or materials not manufactured by Gorman-Rupp. Any warranty for these products and parts shall be provided by the manufacturer(s) of those products and parts. With respect to submersible pumps, the pump and motor are an integral unit and are therefore warranted as a unit. With respect to Pump Stations, all components installed in the Pump Station by Gorman-Rupp are an integral unit and are therefore warranted as a unit (excludes components provided by others for incorporation into the Pump Station). Items normally consumed in use, and wear and tear resulting from normal use are not covered by this Limited Warranty.
- This Limited Warranty shall not apply to any Gorman-Rupp product or part which: (a) has been subjected to misuse, misapplication, alteration, neglect, or physical damage resulting from these causes (b) has been installed, operated, used, and/or maintained in a manner which is not in accordance with Gorman-Rupp's printed recommendations, including but not limited to operation of equipment without being connected to monitoring components provided with the product or damaged as the result of defective power supply, improper electrical protection, faulty installation, improper installation, ordinary wear and tear, corrosion or chemical attack, an Act of God, an Act of War or Terrorism or has been damaged as the result of the use with equipment not sold by Gorman-Rupp and/or not approved by Gorman-Rupp for use with the product.
- This Limited Warranty does not cover costs for any standard and/or scheduled maintenance, nor does it cover parts that, by nature of their function, require replacement as a result of normal wear (e.g., Wear Parts), unless a determination of defect in material or workmanship is made by Gorman-Rupp. Wear Parts include, but are not limited to, impellers, wear plates, wear rings, seals, volutes, diffusers, oil, grease, and/or other items which are required for operation of the pump or pump station and are subject to regular inspection and maintenance.
- Determination of coverage or exceptions to coverage are solely at the option of Gorman-Rupp.

LIMITATIONS

GORMAN-RUPP'S SOLE AND EXCLUSIVE WARRANTY WITH RESPECT TO ITS PRODUCTS AND PARTS IS THIS LIMITED WARRANTY. THIS LIMITED WARRANTY IS IN LIEU OF ALL OTHER EXPRESS AND/OR IMPLIED WARRANTIES, INCLUDING IMPLIED WARRANTIES OF MERCHANTABILITY AND FITNESS FOR PARTICULAR PURPOSE.

EQUIPMENT SELECTED OR SUPPLIED BY OTHERS AND INCORPORATED INTO A GORMAN-RUPP PUMP STATION OR ENCLOSURE IS NOT COVERED BY THIS LIMITED WARRANTY. ANY WARRANTY APPLICABLE TO EQUIPMENT SELECTED OR SUPPLIED BY OTHERS WILL BE LIMITED SOLELY TO THE WARRANTY, IF ANY, PROVIDED BY THE MANUFACTURER OF THE EQUIPMENT.

EXCLUSIVE REMEDY AND DAMAGES

The sole and exclusive remedy for breach of this Limited Warranty by Gorman-Rupp, and the entire extent of its liability for such breach or for damages arising and/or resulting from the use of the products and parts covered by this Limited Warranty shall be as follows:

- **REPAIR OR REPLACEMENT:** Upon return of the product to Gorman-Rupp, if inspection shows that any Gorman-Rupp product or part covered under this Limited Warranty is defective in materials or workmanship, Gorman-Rupp shall repair or replace the defective product or part(s) at its option, without charge in the percentage indicated in **Addendum 1 – Warranty Periods.** The product or part(s) claimed to be defective must have been properly installed, maintained and used in accordance with the maintenance schedule and/or instructions contained in the manual which comes with the product. No allowance will be made for labor, freight, transportation or other charges incurred in connection with such repair or replacement.
- **TO OBTAIN THE ABOVE REMEDY:**
  - Immediately notify Gorman-Rupp of the claimed defect in materials or workmanship and provide the serial number or date code of the product and/or part(s) and provide a copy of the invoice or bill of sale referencing the product and/or part by no later than the expiration date of the Limited Warranty period.
  - Gorman-Rupp will advise whether inspection of the product and/or part(s) will be necessary and whether and how inspection, repair or replacement will be effected. If inspection is necessary, Gorman-Rupp will, at its discretion, provide field inspection by an authorized agent or require that the product or part(s) be sent freight prepaid to Gorman-Rupp at the applicable address below. If the product or part is returned to Gorman-Rupp for inspection, return shipment of the repaired product or part(s) will be F.O.B. to the applicable address below.
- **DAMAGES:** Gorman-Rupp's liability for damages for breach of this Limited Warranty shall not exceed the amount of the purchase price of the product or part in respect to which damages are claimed. **IN NO EVENT SHALL GORMAN-RUPP BE LIABLE FOR INCIDENTAL, CONSEQUENTIAL OR SPECIAL DAMAGES FOR BREACH OF THIS LIMITED WARRANTY OTHER THAN AS STATED HEREIN.**

In some instances, the exclusion or limitation of incidental or consequential damages are not allowed. Accordingly, the above may not apply to you. This Limited Warranty gives you specific legal rights, and you may also have other rights which vary.

*For additional copies please visit **www.GRpumps.com/warranty.***



To return product to Gorman-Rupp, ship to:

GORMAN-RUPP PUMPS
100 Rupp Road, Dock 5
Mansfield, OH 44903
USA
419-755-1280

GORMAN-RUPP AFRICA
4 Harold Flight Road
Jet Park
Boksburg, 1459
Republic Of South Africa
+27 011 397 3536

GORMAN-RUPP CANADA
70 Burwell Road
St. Thomas, Ontario N5P 3R7
Canada
519-631-2870

GORMAN-RUPP EUROPE
Bellweg 50
4101 BJ Culemborg
Netherlands
+31 (0) 85 773 0080

non potable pumps

ADDENDUM 1 - WARRANTY PERIODS

	PRODUCT	0 – 6 Months[1]	7 – 12 Months[1]	13 – 18 Months[1]	19 – 24 Months[1]	25 – 39 Months[1]	40 – 60 Months[1]	Extended Warranty Available[5]
PUMPS	10 Series®	100%						✔
	30 Series	100%						
	50 Series	100%						
	60 Series	100%						
	80 Series®	100%						✔
	6500 Series®	100%						
	D Series (Diaphragm Pumps)	100%						✔
	G Series (Rotary Gear)	100%						
	HS Series® (Hydraulic Submersible)	100%						
	O Series®	100%						✔
	PA Series® (Prime Aire®)	100%						✔
	PAH Series® (Prime Aire Plus®)	100%						✔
	RD & RS Series (Roto-Prime®)	100%						✔
	S Series	100%						
	S1 1/2 A3 (A), S2C3 (A), S2D3 (A) – (From the OTS Program)	100%						
	SC Series	100%						
	SE Series	100%						
	SE1 1/2 A3 (A), SE2C3 (A), SE2D3 (A) – (From the OTS program)	100%						
	SF Series® – Pump Only	100%						✔
	SF Series® – Permanent Municipal Installation[2]	100%			50%		25%	✔
	SH Series	100%						
	Silent Pump	Warranty period is based on pump model included in product						
	SM Series	100%						✔
	Tankleenor	100%						✔
	T Series®	100%						
	Super T Series®	100%						
	Super U Series®	100%						
	Ultra V Series®	100%						
	VG & VGH Series	100%						
STATIONS	ReliaSource® / Complete Gorman-Rupp Pump & Package Stations[3]	100%						
	Pressure Booster / Partial / Non-Standard Pump & Package Stations[4]	100%						✔
OTHER	ReliaPrime® Back-up System	100%						
	Parts	100%						
	Lift Station Remanufacturing Kits	100%						
	Rotating Assemblies for Super T, Super U & Ultra V series	100%						
	Exchange Stock Product	100%						
	Remanufactured Equipment	Warranty period as agreed to at time of purchase						
	Repairs performed at Gorman-Rupp	Parts and workmanship used in repairs only – warranty period for the remainder of original product warranty or 12 months, whichever is greater						

[1] Proration periods are applied based on months after purchase, acceptance, shipment, or installation, as applicable. Percentages for proration periods define the amount of warranted costs to be borne by Gorman-Rupp.

[2] Approved Permanent Municipal Installations are permanent pump installations and require appropriate controls documents at time of installation.

[3] Pump & Package Stations require submission to Gorman-Rupp of Start-Up Report for this Limited Warranty to be in effect on the complete package. In the event that Start-Up Report is not submitted to Gorman-Rupp, each component in the package will be subject to its individual manufacturer warranty, if available.

[4] Partial / Non-Standard Pump & Package Stations refer to packages using pumps other than those produced by Gorman-Rupp or using components other than those specified by Gorman-Rupp or excluding components specified by Gorman-Rupp.

[5] Extended warranty is an extension of the original limited warranty. All exceptions and limitations of the original warranty, except for duration, apply to the extended warranty.

Contact your Gorman-Rupp Company representative for additional extended warranty pricing, availability and terms & conditions.

Effective Date: 06/15/2017
Supersedes All Previous Warranties

Pump Data Sheet - Gorman-Rupp IND 60Hz

Company: Precision Pump Systems
Name: West U WWTP NPW System
Date: 06/10/2021

Option 1 Duplex System

Pump:

Size:	U3A-B-1	Dimensions:	
Type:	U-SERIES	Suction:	3 in
Synch Speed:	Adjustable	Discharge:	3 in
Dia:	11 in		
Curve:	U3A-B-1		
Impeller:	38619-015		

Fluid:

Name:	Water		
SG:	1	Vapor Pressure:	0.256 psi a
Density:	62.4 lb/ft³	Atm Pressure:	14.7 psi a
Viscosity:	1.1 cP		
Temperature:	60 °F	Margin Ratio:	1

Search Criteria:

Flow:	134 US gpm	Near Miss:	---
Head:	80 psi	Static Head:	0 psi

Pump Limits:

Temperature:	---	Sphere Size:	0.81 in
Wkg Pressure:	---		

Motor:

Consult Gorman-Rupp IND 60Hz to select a motor for this pump.

Pump Selection Warnings:

None

--- Duty Point ---

Flow:	134 US gpm
Head:	80.1 psi
Eff:	43.3%
Power:	14.4 hp
NPSHr:	3.56 ft
Speed:	2041 rpm

--- Design Curve ---

Shutoff Head:	83.7 psi
Shutoff dP:	83.7 psi
Min Flow:	--- US gpm

BEP: 63% @ 354 US gpm
NOL Power:
24.5 hp @ 420 US gpm

--- Max Curve ---

Max Power:
27.2 hp @ 422 US gpm

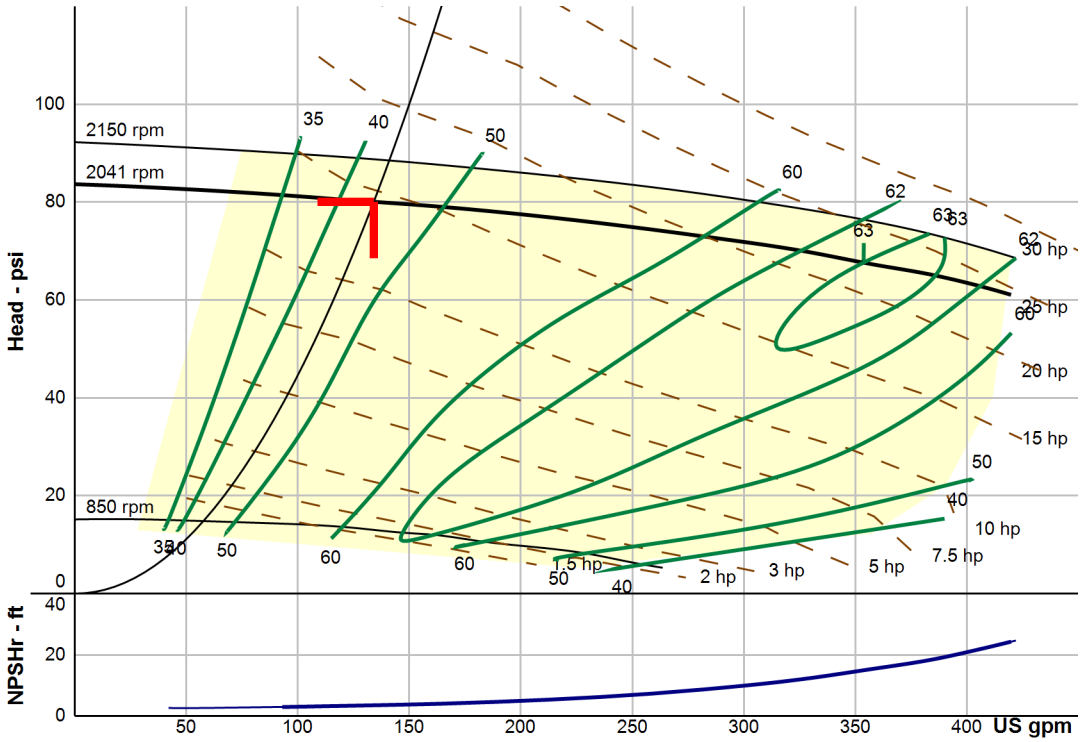

This curve is provided for preliminary selection only. Please consult factory before making final pump or motor selections. Not NSF certified.

Performance Evaluation:

Flow	Speed	Head	Efficiency	Power	NPSHr
US gpm	rpm	psi	%	hp	ft
161	2041	79.2	49	15.1	3.98
134	2041	80.1	43	14.4	3.55
107	2041	81	38	13.3	3.14
80.4	2041	81.7	33	12	2.92
53.6	2041	82.4	27	10.6	2.88

Fontaine Aquanox

Series 20 - Model 204-PX

TYPICAL DRAWING (DATA SHEET)

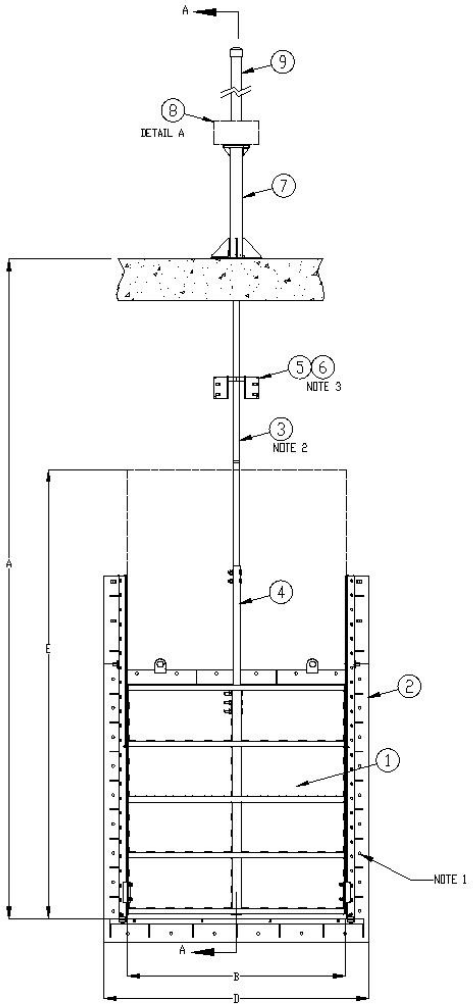

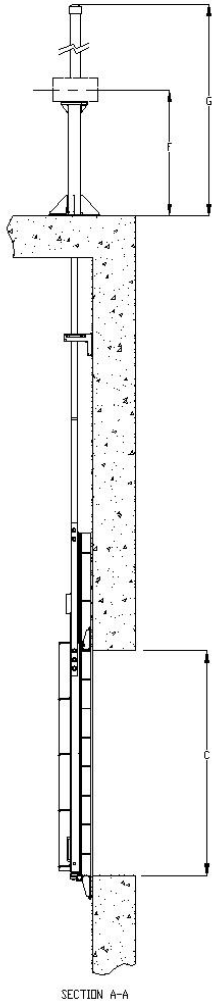

SECTION A-A

MANUAL OPERATOR
GEARBOX (CAST IRON)
& HANDWHEEL (ALUMINUM)

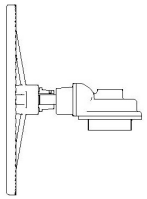

DETAIL A

	Description	Material
1	Slide Assembly	316L Stainless Steel
2	Frame Assembly	316L Stainless Steel
3	Treaded Stem	316 Stainless Steel
4	Stem Extension	316 Stainless Steel
5	Stem Guide Bracket	316L Stainless Steel
6	Stem Guide Bushing	UHMWPE
7	Pedestal	316L Stainless Steel
8	Actuator (See detail A)	
9	Graduated Stem Protector	Clear PVC
10	Wall Gasket	EPDM
11	Compression Cord	EPDM
12	Top Seal	UHMWPE
13	Side Seal & Guide	UHMWPE
14	Bottom Seal	EPDM

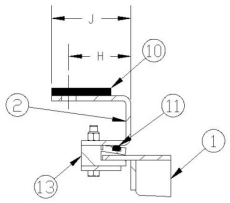

SIDE SEAL
CROSS SECTION

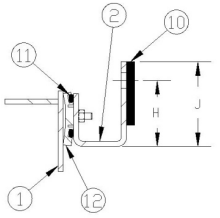

TOP SEAL
CROSS SECTION

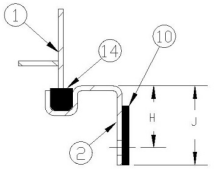

BOTTOM SEAL
CROSS SECTION

NOTE 1. ANCHOR BOLTS ARE NOT SUPPLIED. USE ANCHORS AS RECOMMENDED BELOW OR EQUAL
MECHANICAL: HILTI KWIK BOLT 3, 5/8" [16mm] DIA.X 4" [102mm] EMBEDMENT IN 4000 PSI [28 Mpa] CONCRETE
ADHESIVE: HILTI HVA, 5/8" [16mm] DIA.X 5" [127mm] EMBEDMENT IN 4000 PSI [28 Mpa] CONCRETE
NOTE 2. STEM THREADS ARE ROLLED ACME TYPE THREADS, LEFT HAND, DOUBLE ENTRY
NOTE 3. STEM GUIDES QUANTITY AND POSITION TO BE CONFIRMED AT GATE DESIGN

TABLE OF DIMENSIONS (in / mm)

NOMINAL DIMENSIONS	A	B	C	D	E	F	G	H	J	DESIGN HEAD (ft / m)	WEIGHT (Lbs / Kg)
	144	48	48	56	98,625	36	91	3,125	4	12	725

PRELIMINARY DIMENSIONS
DO NOT USE FOR CONSTRUCTION

Fontaine Aquanox
ISE Métal Inc. - Sherbrooke, QC, Canada
www.ISEAquanox.com - 819-769-0157

Series 20 Slide Gates
Open Frame
Wall Mounted
Rising Stem

REV.:	0	Houston TX, West U WWTP Improvements	
DATE:	2021-05-31	DRAWING NO.:	DTP-S11-PX-FB-CAD.250RF

100677634v2

Bid

Quote Number: 100677634v2
Use quote number at time of order to ensure that you receive prices quoted

Hach
PO Box 608
Loveland, CO 80539-0608
Phone: (800) 227-4224
Email: quotes@hach.com
Website: www.hach.com

Quote Date: 28-Jun-2021

Quote Expiration: 27-Aug-2021

Kimley-Horn

Name: Mike Sheldon
Phone: 2819206588
Email: Mike.Shelton@kimley-horn.com

Customer Quote Reference: West University Place

Sales Contact: Daniel Horne Email: daniel.horne@hach.com Phone: 979-338-0277

PRICING QUOTATION

Line	Part Number	Description	Qty	Net Unit Price	Extended Price
1	2001H	Part # LXV525.99.AA1551- sc4500 Controller	8	2,770.00	22,160.00
2	LXZ524.99.00036	Mounting hardware with sunroof	8	350.00	2,800.00
3	8809200	SC200 UV Protection Screen	8	176.00	1,408.00
4	9020000	Hach LDO sc Model 2 , DO Probe with Luminescent Dissolved Oxygen Technology	8	2,153.00	17,224.00
5	9253000	Pole Mount Assembly for 1" NPT Sensors	8	543.00	4,344.00
				Grand Total	$ 47,936.00

NOTES

****NOTE: FREIGHT IS NOT INCLUDED IN THE GRAND TOTAL PRICE****

See attached freight schedule for estimated charges

Hach is providing a quotation for the instrumentation above. Hach is not responsible for any other requirements outside of the instrumentation quoted above.
For further clarification, see attached document, project clarifications.

Project Clarifications

As an instrument manufacturing company Hach can only be responsible for supplying the pertinent analytical instrumentation as well as any required manufacturer startup services or training. All other project requirements will be the responsibility of the contractor/integrator.

Pricing has been offered based on the instrument specifications provided to Hach Company. It will be the responsibility of the requestor to verify that all instrumentation and quantities offered are accurate. If it is found there are any discrepancies it will be the responsibility of the requestor to obtain revised pricing as required from Hach Company.

Listed below are the required project clarifications that need to be reviewed and verified by the requestor. It is the responsibility of the requestor to ensure all instrumentation requirements for the project have been addressed.

PART 1 – GENERAL PROJECT REQUIREMENTS:

Hach is providing budgetary quotation at this time per verbal request. No written specifications were provided.

Standard Hach Company submittal packages, O&M manuals, and drawings can be supplied at the request of the customer. Custom formatting of any submittal packages, data sheets, manuals, or drawings is not available. Documentation can be supplied electronically via email. Documentation cannot be downloaded to any type of FTP or 3rd party site.

One (1) copy of the standard Operation & Maintenance Manual is supplied with the instrumentation at time of shipment. Additional copies can be downloaded at www.hach.com for no additional charge.

The instrumentation has been offered with standard warranty terms. Extended warranties for up to a (3) year warranty term can be purchased for an additional charge if required. All warranties go into effect the day the instrumentation ships from the factory.
If warranty is up to Substantial completion date, quote recipient is responsible to verify required term as Hach was not provided the required substantial completion date.

Standard lead time for instrumentation is (30) days ARO.

PART 2 – PRODUCT:

GENERAL REQUIREMENTS:

The instrumentation is supplied with the necessary fuses; however, it will be the responsibility of the contractor/integrator to supply any required surge or lightning protection as Hach Company cannot supply these items.

Hach Company is an instrument manufacturer and is unable to supply any type of instrument enclosures such as, but not limited to: NEMA 4X Stainless Steel, any type of Stainless Steel Enclosure, Enclosures with Heating or Cooling elements, or Enclosures with Condensers, instrument back panels, or instrument racks. These items will need to be supplied by the integrator/contractor.

Standard Hach Company stainless steel tags are available for an additional charge. Size: 3” X 1”; Maximum Characters: 20.

If the instrumentation is not being hard wired power cords will be required and can be ordered for an additional charge.

Hach Company payment terms are Net (30) days from invoice date and Retainage Terms of any kind will not be accepted for any order resulting from this quotation.

Hach Company standard terms and conditions will apply to any order or contract that may result from this quotation.

Sales Contact:

Name:	Daniel Horne
Title:	Regional Sales Manager
Phone:	979-338-0277
Email:	daniel.horne@hach.com

HACH COMPANY

Headquarters
P.O. Box 389
5600 Lindbergh Drive
Loveland, CO 80539-0389

Purchase Orders
PO Box 608
Loveland, CO 80539-0608

WebSite: www.hach.com

U.S.A.
Phone: 800-227-4224
Fax: 970-669-2932
E-Mail: orders@hach.com
quotes@hach.com
techhelp@hach.com

Export
Phone: 970-669-3050
Fax: 970-461-3939
Email: intl@hach.com

Remittance
2207 Collections Center Drive
Chicago, IL 60693

Wire Transfers
Bank of America
231 S. LaSalle St.
Chicago, IL 60604
Account: 8765602385
Routing (ABA): 071000039

Be Right™

Quotation Addendum

ADVANTAGES OF WORKING WITH HACH

Hach Service	***Pick&Ship™***	***Technical Support***
Protect your investment & peace of mind ✓ A global partner who understands your needs ✓ Delivers timely, high-quality service you can trust ✓ Provides team of unique experts to help you maximize instrument uptime ✓ Ensure data integrity ✓ Maintain operational stability ✓ Reduce compliance risk www.hach.com/service-contracts	*Pick&Ship™ Program offers a better way to keep your supplies in stock* ✓ **Convenience** of one purchase order for the entire year ✓ **Flexibility** to change, cancel or create new orders ✓ **Savings** from locking in prices & thus avoiding price surges and rush charges ✓ **Peace of mind** with automatic, reliable shipments just as you need them www.Hach.com/pickandship	*Provides post-sale instrumentation and application support* ✓ Hach's highly skilled Technical Support staff is dedicated to helping you resolve technical issues before, during and after the sale. ✓ Available via phone, e-mail, or live online chat at Hach.com! ✓ Fast access to answers at https://support.hach.com ✓ Toll-free phone: 800-227-4224 ✓ E-mail: techhelp@hach.com www.Hach.com

ADVANTAGES OF SIMPLIFIED SHIPPING AND HANDLING

Safe & Fast Delivery	***Save Time – Less Hassle***	***Save Money***
✓ Receive tracking numbers on your order acknowledgement ✓ Hach will assist with claims if an order is lost or damaged in shipment	✓ No need to set up deliveries for orders or to schedule pickup ✓ Hach ships order as product is available, at no additional charge, when simplified shipping and handling is used.	✓ No additional invoice to process – save on time and administrative costs ✓ Only pay shipping once, even if multiple shipments are required

STANDARD SIMPLIFIED SHIPPING AND HANDLING CHARGES [1, 2, 3, 4] *Pricing Effective 4/11/2020*

Total Price of Merchandise Ordered	Standard Surface (Mainland USA)	Second Day Delivery (Mainland USA)	Next Day Delivery (Mainland USA)	Second Day Delivery (Alaska & Hawaii)	Next Day Delivery (Alaska & Hawaii)	**Collect** [4] Handling Fee *Effective 4/11/2020*
$0.00 - $49.99	$17.99	$44.99	$83.90	$72.21	$137.27	$13.47
$50.00 - $149.99	$28.59	$84.27	$159.00	$120.84	$229.73	$13.85
$150.00 - $349.99	$50.22	$133.98	$272.91	$169.07	$329.04	$14.72
$350.00 - $649.99	$69.95	$182.91	$363.75	$228.65	$442.76	$15.48
$650.00 - $949.99	$88.16	$191.13	$399.98	$236.66	$446.10	$16.04
$950.00 - $1,999.99	$110.91	$235.85	$498.69	$280.67	$543.06	$17.52
$2,000.00 - $3,999.99	$128.04	$250.64	$513.44	$291.54	$554.54	$20.22
$4,000.00 - $5,999.99	$148.44	$260.33	$538.23	$292.89	$570.53	$24.90
$6,000.00 - $7,999.99	$175.40	$296.40	$612.84	$323.07	$622.86	$29.04
$8,000.00 - $9,999.99	$200.15	$336.83	$658.19	$360.41	$683.52	$33.51
Over $10,000	2.5% of Net Order Value	4.5% of Net Order Value	7% of Net Order Value	4.5% of Net Order Value	7% of Net Order Value	$51.84

1 Shipping & Handling charges shown are only applicable to orders billing and shipping to U.S. destinations. Shipping & Handling charges will be prepaid and added to invoice. Shipping & Handling for the Pick&Ship Program is charged on each shipment release and is based on the total price of each shipment release. Shipping & Handling charges are subject to change without notice.

2 Additional Shipping & Handling charges will be applied to orders containing bulky and/or especially heavy orders. Refrigerated and all weather Samplers do not qualify for simplified Shipping & Handling charges, and are considered heavy products. Dissolved Oxygen Sensors can be damaged if exposed to temps below freezing, causing sensor failure. Must be shipped over night or 2nd day air during the cold weather months.

3 Orders shipping to Alaska or Hawaii: Additional Shipping & Handling charges may be applied at time of order processing. Second Day and Next Day delivery is not available to all destinations.

4 Hach Company will assess a collect handling fee on orders with collect shipping terms. This handling fee covers the additional costs that Hach Company incurs from processing and managing collect shipments.

Due to variations in component characteristics, regulatory transportation requirements and/or associated shipping and handling costs, individual kit components may or may not be packaged together in a single carton at time of final packaging and shipping.

SALES TAX

Sales Tax is not included in the attached quotation. Applicable sales and usage taxes will be added to your invoice, at the time of order, based on U.S. destination of goods, unless a valid resale/exemption certificate for destination state is provided to the above address or fax number, attention of the Tax Dept.

HACH COMPANY | 5600 Lindbergh Drive | PO Box 389 | Loveland, Colorado 80539 | P 970.669.3050 | F 970.669.2932 | hach.com

TERMS & CONDITIONS OF SALE FOR HACH COMPANY PRODUCTS AND SERVICES

This document sets forth the Terms & Conditions of Sale for goods manufactured and/or supplied, and services provided, by Hach Company of Loveland, Colorado ("Hach") and sold to the original purchaser thereof ("Buyer"). Unless otherwise specifically stated herein, the term "Hach" includes only Hach Company and none of its affiliates. Unless otherwise specifically stated in a previously-executed written purchase agreement signed by authorized representatives of Hach and Buyer, these Terms & Conditions of Sale establish the rights, obligations and remedies of Hach and Buyer which apply to this offer and any resulting order or contract for the sale of Hach's goods and/or services ("Products").

1. APPLICABLE TERMS & CONDITIONS: These Terms & Conditions of Sale are contained directly and/or by reference in Hach's offer, order acknowledgment, and invoice documents. The first of the following acts constitutes an acceptance of Hach's offer and not a counteroffer and creates a contract of sale ("Contract") in accordance with these Terms & Conditions: (i) Buyer's issuance of a purchase order document against Hach's offer; (ii) acknowledgement of Buyer's order by Hach; or (iii) commencement of any performance by Hach pursuant to Buyer's order. Provisions contained in Buyer's purchase documents (including electronic commerce interfaces) that materially alter, add to or subtract from the provisions of these Terms & Conditions of Sale are not a part of the Contract.

2. CANCELLATION: Buyer may cancel goods orders subject to fair charges for Hach's expenses including handling, inspection, restocking, freight and invoicing charges as applicable, provided that Buyer returns such goods to Hach at Buyer's expense within 30 days of delivery and in the same condition as received. Buyer may cancel service orders on ninety (90) day's prior written notice and refunds will be prorated based on the duration of the service plan. Inspections and re-instatement fees may apply upon cancellation or expiration of service programs. Seller may cancel all or part of any order prior to delivery without liability if the order includes any Products that Seller determines may not comply with export, safety, local certification, or other applicable compliance requirements.

3. DELIVERY: Delivery will be accomplished FCA Hach's facility located in Ames, Iowa or Loveland, Colorado, United States (Incoterms 2010). Legal title and risk of loss or damage pass to Buyer upon transfer to the first carrier. Hach will use commercially reasonable efforts to deliver the Products ordered herein within the time specified on the face of this Contract or, if no time is specified, within Hach's normal lead-time necessary for Hach to deliver the Products sold hereunder. Upon prior agreement with Buyer and for an additional charge, Hach will deliver the Products on an expedited basis. Standard service delivery hours are 8 am – 5 pm Monday through Friday, excluding holidays.

4. INSPECTION: Buyer will promptly inspect and accept any Products delivered pursuant to this Contract after receipt of such Products. In the event the Products do not conform to any applicable specifications, Buyer will promptly notify Hach of such nonconformance in writing. Hach will have a reasonable opportunity to repair or replace the nonconforming product at its option. Buyer will be deemed to have accepted any Products delivered hereunder and to have waived any such nonconformance in the event such a written notification is not received by Hach within thirty (30) days of delivery.

5. PRICES & ORDER SIZES: All prices are in U.S. dollars and are based on delivery as stated above. Prices do not include any charges for services such as insurance; brokerage fees; sales, use, inventory or excise taxes; import or export duties; special financing fees; VAT, income or royalty taxes imposed outside the U.S.; consular fees; special permits or licenses; or other charges imposed upon the production, sale, distribution, or delivery of Products. Buyer will either pay any and all such charges or provide Hach with acceptable exemption certificates, which obligation survives performance under this Contract. Hach reserves the right to establish minimum order sizes and will advise Buyer accordingly.

6. PAYMENTS: All payments must be made in U.S. dollars. For Internet orders, the purchase price is due at the time and manner set forth at www.hach.com. Invoices for all other orders are due and payable NET 30 DAYS from date of the invoice without regard to delays for inspection or transportation, with payments to be made by check to Hach at the above address or by wire transfer to the account stated on the front of Hach's invoice, or for customers with no established credit, Hach may require cash or credit card payment in advance of delivery. In the event payments are not made or not made in a timely manner, Hach may, in addition to all other remedies provided at law, either: (a) declare Buyer's performance in breach and terminate this Contract for default; (b) withhold future shipments until delinquent payments are made; (c) deliver future shipments on a cash-with-order or cash-in-advance basis even after the delinquency is cured; (d) charge interest on the delinquency at a rate of 1-1/2% per month or the maximum rate permitted by law, if lower, for each month or part thereof of delinquency in payment plus applicable storage charges and/or inventory carrying charges; (e) repossess the Products for which payment has not been made; (f) recover all costs of collection including reasonable attorney's fees; or (g) combine any of the above rights and remedies as is practicable and permitted by law. Buyer is prohibited from setting off any and all monies owed under this from any other sums, whether liquidated or not, that are or may be due Buyer, which arise out of a different transaction with Hach or any of its affiliates. Should Buyer's financial responsibility become unsatisfactory to Hach in its reasonable discretion, Hach may require cash payment or other security. If Buyer fails to meet these requirements, Hach may treat such failure as reasonable grounds for repudiation of this Contract, in which case reasonable cancellation charges shall be due Hach. Buyer grants Hach a security interest in the Products to secure payment in full, which payment releases the security interest but only if such payments could not be considered an avoidable transfer under the U.S. Bankruptcy Code or other applicable laws. Buyer's insolvency, bankruptcy, assignment for the benefit of creditors, or dissolution or termination of the existence of Buyer, constitutes a default under this Contract and affords Hach all the remedies of a secured party under the U.C.C., as well as the remedies stated above for late payment or non-payment. See ¶20 for further wire transfer requirements.

7. LIMITED WARRANTY: Hach warrants that Products sold hereunder will be free from defects in material and workmanship and will, when used in accordance with the manufacturer's operating and maintenance instructions, conform to any express written warranty pertaining to the specific goods purchased, which for most Hach instruments is for a period of twelve (12) months from delivery. Hach warrants that services furnished hereunder will be free from defects in workmanship for a period of ninety (90) days from the completion of the services. Parts provided by Hach in the performance of services may be new or refurbished parts functioning equivalent to new parts. Any non-functioning parts that are repaired by Hach shall become the property of Hach. No warranties are extended to consumable items such as, without limitation, reagents, batteries, mercury cells, and light bulbs. **All other guarantees, warranties, conditions and representations, either express or implied, whether arising under any statute, law, commercial usage or otherwise, including implied warranties of merchantability and fitness for a particular purpose, are hereby excluded.** The sole remedy for Products not meeting this Limited Warranty is replacement, credit or refund of the purchase price. This remedy will not be deemed to have failed of its essential purpose so long as Hach is willing to provide such replacement, credit or refund.

8. INDEMNIFICATION: Indemnification applies to a party and to such party's successors-in-interest, assignees, affiliates, directors, officers, and employees ("Indemnified Parties"). Hach is responsible for and will defend, indemnify and hold harmless the Buyer Indemnified Parties against all losses, claims, expenses or damages which may result from accident, injury, damage, or death due to Hach's breach of the Limited Warranty. Buyer is responsible for and will defend, indemnify and hold harmless the Hach Indemnified Parties against all losses, claims, expenses or damages which may result from accident, injury, damage, or death due to negligence, misuse or misapplication of any goods or services, violations of law, or the breach of any provision of this Contract by the Buyer, its affiliates, or those employed by, controlled by or in privity with them. Buyer's workers' compensation immunity, if any, does not preclude or limit its indemnification obligations.

9. PATENT PROTECTION: Subject to all limitations of liability provided herein, Hach will, with respect to any Products of Hach's design or manufacture, indemnify Buyer from any and all damages and costs as finally determined by a court of competent jurisdiction in any suit for infringement of any U.S. patent (or European patent for Products that Hach sells to Buyer for end use in a member state of the E.U.) that has issued as of the delivery date, solely by reason of the sale or normal use of any Products sold to Buyer hereunder and from reasonable expenses incurred by Buyer in defense of such suit if Hach does not undertake the defense thereof, provided that Buyer promptly notifies

Hach of such suit and offers Hach either (i) full and exclusive control of the defense of such suit when Products of Hach only are involved, or (ii) the right to participate in the defense of such suit when products other than those of Hach are also involved. Hach's warranty as to use patents only applies to infringement arising solely out of the inherent operation of the Products according to their applications as envisioned by Hach's specifications. In case the Products are in such suit held to constitute infringement and the use of the Products is enjoined, Hach will, at its own expense and at its option, either procure for Buyer the right to continue using such Products or replace them with non-infringing products, or modify them so they become non-infringing, or remove the Products and refund the purchase price (prorated for depreciation) and the transportation costs thereof. The foregoing states the entire liability of Hach for patent infringement by the Products. Further, to the same extent as set forth in Hach's above obligation to Buyer, Buyer agrees to defend, indemnify and hold harmless Hach for patent infringement related to (x) any goods manufactured to the Buyer's design, (y) services provided in accordance with the Buyer's instructions, or (z) Hach's Products when used in combination with any other devices, parts or software not provided by Hach hereunder.

10. TRADEMARKS AND OTHER LABELS: Buyer agrees not to remove or alter any indicia of manufacturing origin or patent numbers contained on or within the Products, including without limitation the serial numbers or trademarks on nameplates or cast, molded or machined components.

11. SOFTWARE AND DATA. All licenses to Hach's separately-provided software products are subject to the separate software license agreement(s) accompanying the software media and/or included as an Appendix to these Terms & Conditions of Sale. Except to the extent such express licenses conflict with the remainder of this paragraph, the following also applies relative to Hach's software: Hach grants Buyer only a personal, non-exclusive license to access and use the software provided by Hach with Products purchased hereunder solely as necessary for Buyer to enjoy the benefit of the Products. A portion of the software may contain or consist of open source software, which Buyer may use under the terms and conditions of the specific license under which the open source software is distributed. Buyer agrees that it will be bound by all such license agreements. Title to software remains with the applicable licensor(s). In connection with Buyer's use of Products, Hach may obtain, receive, or collect data or information, including data produced by the Products. In such cases, Buyer grants Hach a non-exclusive, worldwide, royalty-free, perpetual, non-revocable license to use, compile, distribute, display, store, process, reproduce, or create derivative works of such data, or to aggregate such data for use in an anonymous manner, solely to facilitate marketing, sales and R&D activities of Hach and its affiliates.

12. PROPRIETARY INFORMATION; PRIVACY: "Proprietary Information" means any information, technical data or know-how in whatever form, whether documented, contained in machine readable or physical components, mask works or artwork, or otherwise, which Hach considers proprietary, including but not limited to service and maintenance manuals. Buyer and its customers, employees and agents will keep confidential all such Proprietary Information obtained directly or indirectly from Hach and will not transfer or disclose it without Hach's prior written consent, or use it for the manufacture, procurement, servicing or calibration of Products or any similar products, or cause such products to be manufactured, serviced or calibrated by or procured from any other source, or reproduce or otherwise appropriate it. All such Proprietary Information remains Hach's property. No right or license is granted to Buyer or its customers, employees or agents, expressly or by implication, with respect to the Proprietary Information or any patent right or other proprietary right of Hach, except for the limited use licenses implied by law. Hach will manage Customer's information and personal data in accordance with its Privacy Policy, located at http://www.hach.com/privacypolicy.

13. CHANGES AND ADDITIONAL CHARGES: Hach reserves the right to make design changes or improvements to any products of the same general class as Products being delivered hereunder without liability or obligation to incorporate such changes or improvements to Products ordered by Buyer unless agreed upon in writing before the Products' delivery date. Services which must be performed as a result of any of the following conditions are subject to additional charges for labor, travel and parts: (a) equipment alterations not authorized in writing by Hach; (b) damage resulting from improper use or handling, accident, neglect, power surge, or operation in an environment or manner in which the instrument is not designed to operate or is not in accordance with Hach's operating manuals; (c) the use of parts or accessories not provided by Hach; (d) damage resulting from acts of war, terrorism or nature; (e) services outside standard business hours; (f) site prework not complete per proposal; or (g) any repairs required to ensure equipment meets manufacturer's specifications upon activation of a service agreement.

14. SITE ACCESS / PREPARATION / WORKER SAFETY / ENVIRONMENTAL COMPLIANCE: In connection with services provided by Hach, Buyer agrees to permit prompt access to equipment. Buyer assumes full responsibility to back-up or otherwise protect its data against loss, damage or destruction before services are performed. Buyer is the operator and in full control of its premises, including those areas where Hach employees or contractors are performing service, repair and maintenance activities. Buyer will ensure that all necessary measures are taken for safety and security of working conditions, sites and installations during the performance of services. Buyer is the generator of any resulting wastes, including without limitation hazardous wastes. Buyer is solely responsible to arrange for the disposal of any wastes at its own expense. Buyer will, at its own expense, provide Hach employees and contractors working on Buyer's premises with all information and training required under applicable safety compliance regulations and Buyer's policies. If the instrument to be serviced is in a Confined Space, as that term is defined under OSHA regulations, Buyer is solely responsible to make it available to be serviced in an unconfined space. Hach service technicians will not work in Confined Spaces. In the event that a Buyer requires Hach employees or contractors to attend safety or compliance training programs provided by Buyer, Buyer will pay Hach the standard hourly rate and expense reimbursement for such training attended. The attendance at or completion of such training does not create or expand any warranty or obligation of Hach and does not serve to alter, amend, limit or supersede any part of this Contract.

15. LIMITATIONS ON USE: Buyer will not use any Products for any purpose other than those identified in Hach's catalogs and literature as intended uses. Unless Hach has advised the Buyer in writing, in no event will Buyer use any Products in drugs, food additives, food or cosmetics, or medical applications for humans or animals. In no event will Buyer use in any application any Product that requires FDA 510(k) clearance unless and only to the extent the Product has such clearance. Buyer will not sell, transfer, export or re-export any Hach Products or technology for use in activities which involve the design, development, production, use or stockpiling of nuclear, chemical or biological weapons or missiles, nor use Hach Products or technology in any facility which engages in activities relating to such weapons. Unless the "ship-to" address is in California, U.S.A., the Products are not intended for sale in California and may lack markings required by California Proposition 65; accordingly, unless Buyer has ordered Products specifying a California ship-to address, Buyer will not sell or deliver any Hach Products for use in California. Any warranty granted by Hach is void if any goods covered by such warranty are used for any purpose not permitted hereunder.

16. EXPORT AND IMPORT LICENSES AND COMPLIANCE WITH LAWS: Unless otherwise specified in this Contract, Buyer is responsible for obtaining any required export or import licenses. Buyer will comply with all laws and regulations applicable to the installation or use of all Products, including applicable import and export control laws and regulations of the U.S., E.U. and any other country having proper jurisdiction, and will obtain all necessary export licenses in connection with any subsequent export, re-export, transfer and use of all Products and technology delivered hereunder. Buyer will comply with all local, national, and other laws of all jurisdictions globally relating to anti-corruption, bribery, extortion, kickbacks, or similar matters which are applicable to Buyer's business activities in connection with this Contract, including but not limited to the U.S. Foreign Corrupt Practices Act of 1977, as amended (the "FCPA"). Buyer agrees that no payment of money or provision of anything of value will be offered, promised, paid or transferred, directly or indirectly, by any person or entity, to any government official, government employee, or employee of any company owned in part by a government, political party, political party official, or candidate for any government office or political party office to induce such organizations or persons to use their authority or influence to obtain or retain an improper business advantage for Buyer or for Hach, or which otherwise constitute or have the purpose or effect of public or commercial bribery, acceptance of or acquiescence in extortion, kickbacks or other unlawful or improper means of obtaining business or any improper advantage, with respect to any of Buyer's activities related to this Contract. Hach asks Buyer to "*Speak Up*!" if aware of any violation of law, regulation or our Standards of Conduct ("SOC") in relation to this Contract. See http://danaher.com/integrity-and-compliance and www.danaherintegrity.com for a copy of the SOC and for access to our Helpline portal.

17. RELATIONSHIP OF PARTIES: Buyer is not an agent or representative of Hach and will not present itself as such under any circumstances unless and to

the extent it has been formally screened by Hach's compliance department and received a separate duly-authorized letter from Hach setting forth the scope and limitations of such authorization.

18. FORCE MAJEURE: Hach is excused from performance of its obligations under this Contract to the extent caused by acts or omissions that are beyond its control of, including but not limited to Government embargoes, blockages, seizures or freeze of assets, delays or refusals to grant an export or import license or the suspension or revocation thereof, or any other acts of any Government; fires, floods, severe weather conditions, or any other acts of God; quarantines; labor strikes or lockouts; riots; strife; insurrections; civil disobedience or acts of criminals or terrorists; war; material shortages or delays in deliveries to Hach by third parties. In the event of the existence of any force majeure circumstances, the period of time for delivery, payment terms and payments under any letters of credit will be extended for a period of time equal to the period of delay. If the force majeure circumstances extend for six months, Hach may, at its option, terminate this Contract without penalty and without being deemed in default or in breach thereof.

19. NON ASSIGNMENT AND WAIVER: Buyer will not transfer or assign this Contract or any rights or interests hereunder without Hach's prior written consent. Failure of either party to insist upon strict performance of any provision of this Contract, or to exercise any right or privilege contained herein, or the waiver of any breach of the terms or conditions of this Contract will not be construed as thereafter waiving any such terms, conditions, rights, or privileges, and the same will continue and remain in force and effect as if no waiver had occurred.

20. FUNDS TRANSFERS (PAYMENTS): Buyer and Hach both recognize that there is a risk of banking fraud when individuals impersonating a business demand payment under new banking or mailing instructions. To avoid this risk, Buyer must verbally confirm any new or changed bank transfer or mailing instructions by calling Hach at +1-970-663-1377 and speaking with Hach's Credit Manager before mailing or transferring any monies using the new instructions. Both parties agree that they will not institute mailing or bank transfer instruction changes and require immediate payment under the new instructions but will instead provide a ten (10) day grace period to verify any payment instruction changes before any new or outstanding payments are due using the new instructions.

21. LIMITATION OF LIABILITY: None of the Hach Indemnified Parties will be liable to Buyer under any circumstances for any special, treble, incidental or consequential damages, including without limitation, damage to or loss of property other than for the Products purchased hereunder; damages incurred in installation, repair or replacement; lost profits, revenue or opportunity; loss of use; losses resulting from or related to downtime of the products or inaccurate measurements or reporting; the cost of substitute products; or claims of Buyer's customers for such damages, howsoever caused, and whether based on warranty, contract, and/or tort (including negligence, strict liability or otherwise). The total liability of the Hach Indemnified Parties arising out of the performance or nonperformance hereunder or Hach's obligations in connection with the design, manufacture, sale, delivery, and/or use of Products will in no circumstance exceed in the aggregate a sum equal to twice the amount actually paid to Hach for Products delivered hereunder.

22. APPLICABLE LAW AND DISPUTE RESOLUTION: The construction, interpretation and performance hereof and all transactions hereunder shall be governed by the laws of the State of Colorado, without regard to its principles or laws regarding conflicts of laws. If any provision of this Contract violates any Federal, State or local statutes or regulations of any countries having jurisdiction of this transaction, or is illegal for any reason, said provision shall be self-deleting without affecting the validity of the remaining provisions. Unless otherwise specifically agreed upon in writing between Hach and Buyer, any dispute relating to this Contract which is not resolved by the parties shall be adjudicated in order of preference by a court of competent jurisdiction (i) in the State of Colorado, U.S.A. if Buyer has minimum contacts with Colorado and the U.S., (ii) elsewhere in the U.S. if Buyer has minimum contacts with the U.S. but not Colorado, or (iii) in a neutral location if Buyer does not have minimum contacts with the United States.

23. ENTIRE AGREEMENT & MODIFICATION: These Terms & Conditions of Sale constitute the entire agreement between the parties and supersede any prior agreements or representations, whether oral or written. No change to or modification of these Terms & Conditions shall be binding upon Hach unless in a written instrument specifically referencing that it is amending these Terms & Conditions of Sale and signed by an authorized representative of Hach. Hach rejects any additional or inconsistent Terms & Conditions of Sale offered by Buyer at any time, whether or not such terms or conditions materially alter the Terms & Conditions herein and irrespective of Hach's acceptance of Buyer's order for the described goods and services.

24. APPENDICES: If checked, the following Appendices are attached hereto and incorporated by reference into these Terms & Conditions of Sale:

☐ CLAROS SOFTWARE AS A SERVICE SUBSCRIPTION AGREEMENT

* * *


DO probe
swivel

DISSOLVED OXYGEN: HACH LDO® PROBE, MODEL 2

Applications
- Wastewater
- Industrial Water
- Drinking Water



Take “No” for an answer when measuring dissolved oxygen with the next generation Hach LDO probe.

No Calibration Required
The Hach LDO probe is ready to work in your process right out of the box with no calibration required for the entire 2-year life of the sensor cap.

No Membranes to Replace
There is virtually no maintenance with Hach's breakthrough luminescent technology. There are no membranes to replace, no electrolyte solution to replenish, and no anode or cathode to clean.

No Missed Cleaning Cycles
Customizable service indicators trigger a service message so that a cleaning cycle is never missed.

No Drift
A cutting-edge, 3D calibration procedure at the factory makes oxygen measurement with the Hach LDO probe more accurate than ever before.

No Complications
A robust new design gives the Hach LDO enhanced durability and reduced size for easier handling.

HACH®
Be Right™

Specifications*

Range	0 to 20.00 ppm 0 to 20.0 mg/L (or ppm) 0 to 200 % air saturation
Accuracy	± 0.05 ppm below 1 ppm ± 0.1 ppm below 5 ppm ± 0.2 ppm above 5 ppm
Response Time	T_{95} < 60 s T_{90} < 40 s
Resolution	0.01 ppm DO 0.1% saturation
Repeatability	± 0.1 (mg/L) ppm
Flow Rate	None required
Sensor Immersion Depth	Down to 345 kPa 345 kPa (50 psi), maximum; accuracy may not be maintained at this depth
Transmission Distance	1000 m (3280 ft.) maximum when used with a termination box
Cable Length	10 m (options with 30m, 60m, 100m)
Dimensions (D x L)	1.9 in x 10 in (48.25 mm x 254 mm)
Weight	2.2 lbs. (1 kg), probe only

**Subject to change without notice.*

Principle of Operation

The HACH LDO sensor is coated with a luminescent material. Blue light from an LED is transmitted to the sensor surface. The blue light excites the luminescent material. As the material relaxes it emits red light. The time it takes for the red light to be emitted is measured. Between the flashes of blue light, a red LED is flashed on the sensor and used as an internal reference.

Increased oxygen in the sample decreases the time it takes for the red light to be emitted. The time measurements correlate to the oxygen concentration.

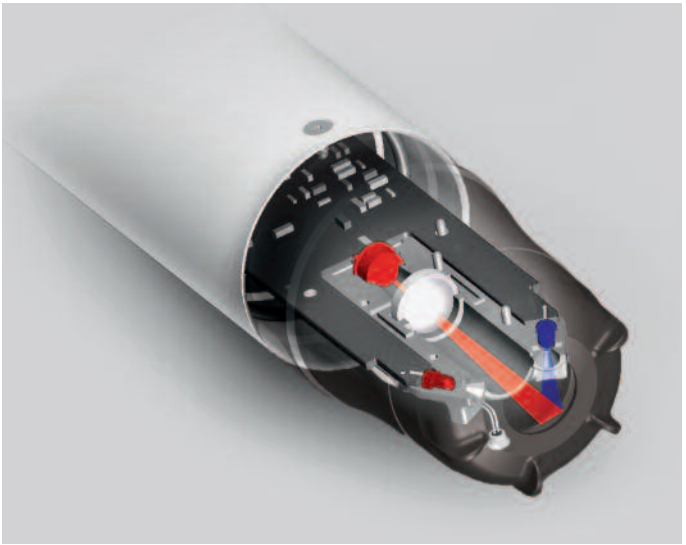

Dimensions

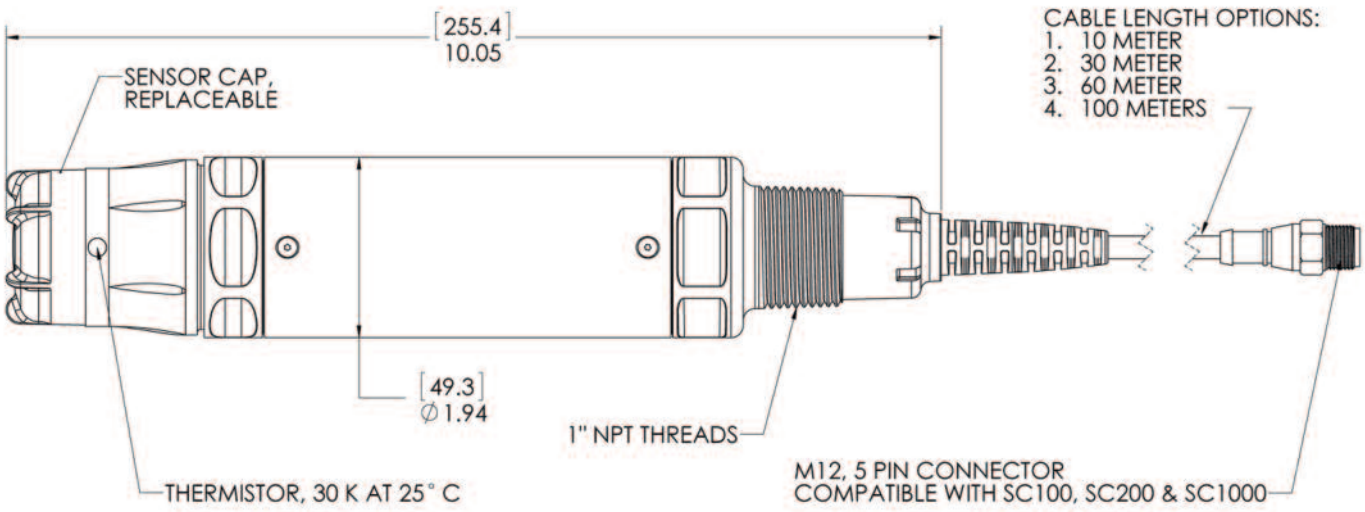

Installation / Mounting

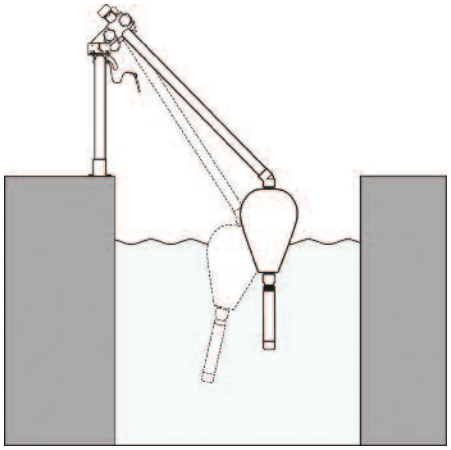

Float Mount Kit

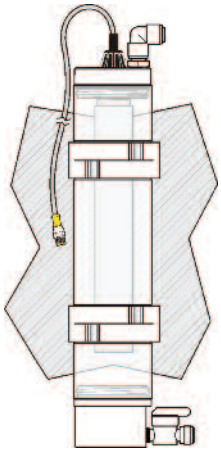

Flow Cell

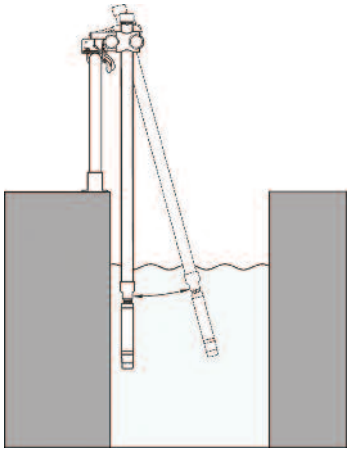

Pole Mount Kit

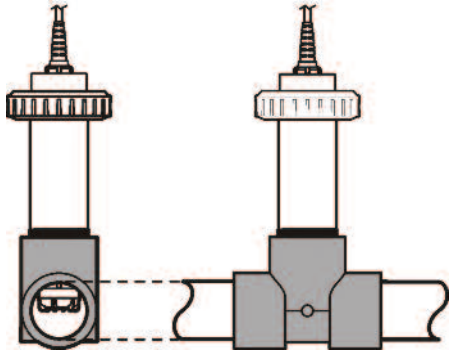

Union Mount Kit

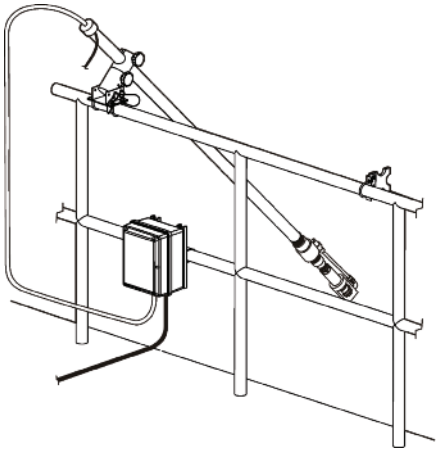

Air Blast Cleaning System

Ordering Information

9020000	Hach LDO Model 2 Probe
9020000-UPGRADE	LDO Probe, Mounting Conversion Adapter
9020000-SC200	LDO Probe, Mounting Conversion Adapter, sc200 controller with 2 channels

Accessories

5867000	Digital Termination Box
5796000	Digital Extension Cable, 7.7 m (25 ft.)
5796100	Digital Extension Cable, 15 m (50 ft.)
5796200	Digital Extension Cable, 31 m (100 ft.)
6860000	High Output Air Blast Cleaning System, 115 Vac
6860100	High Output Air Blast Cleaning System, 230 Vac
9253500	Air Blast Hardware Components

Replacement Parts

9021100	LDO Model 2 Sensor Cap Replacement Kit

Mounting Kits

9253000	Pole Mount Kit, PVC
9253100	Ball Float Mount Kit, PVC
9257000	Union Mount Kit, PVC
9253400	Mounting Conversion Adapter, LDO Model 1 to LDO Model 2
7300800	1 NPT sc Sensors Flow Cell

Controllers

sc200 Digital Controllers

LXV404.99.00552	sc200 controller, 2 channel, digital
LXV404.99.00542	sc200 controller, 2 channel, digital & mA input
LXV404.99.00502	sc200 controller, 1 channel, digital
LXV404.99.00512	sc200 controller, 2 channel, digital & pH/DO
LXV404.99.00522	sc200 controller, 2 channel, digital & Conductivity
LXV404.99.00532	sc200 controller, 2 channel, digital & Flow

sc1000 Digital Controllers

LXV402.99.00002	sc1000 Display Module
LXV400.99.1R572	sc1000 Probe Module, 4 sensors, 4 mA Out, 4 mA In, 4 Relays, 110-230V
LXV400.99.1B572	sc1000 Probe Module, 4 sensors, 4 mA Out, 4 mA In, 4 Relays, Modbus RS485, 110-230V
LXV400.99.1F572	sc1000 Probe Module, 4 sensors, 4 mA Out, 4 mA In, 4 Relays, PROFIBUS DP, 110-230V
LXV400.99.1R582	sc1000 Probe Module, 6 sensors, 4 mA Out, 4 mA In, 4 Relays, 110-230V







HACH COMPANY World Headquarters: Loveland, Colorado USA

United States: 800-227-4224 tel 970-669-2932 fax orders@hach.com
Outside United States: 970-669-3050 tel 970-461-3939 fax int@hach.com
hach.com

LIT2455 Rev 3
A14 Printed in U.S.A.
©Hach Company, 2014. All rights reserved.
In the interest of improving and updating its equipment, Hach Company reserves the right to alter specifications to equipment at any time.

HACH® Be Right™

9253000, 9253100, 9254000, 9254100, 9255000, 9255100, 9256000, 9246100

DOC273.99.80174

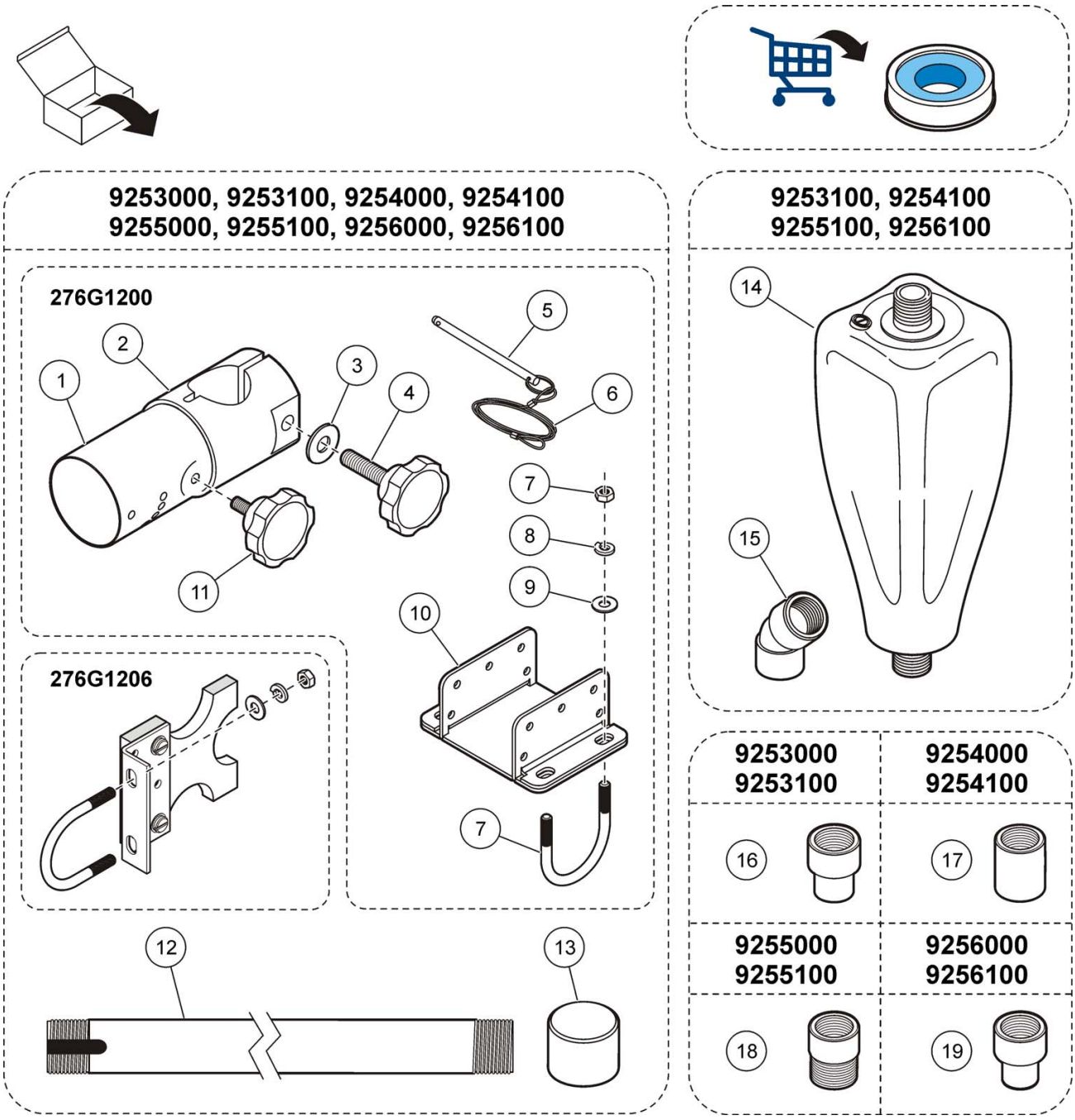

1	9110800	**6**	9H1394	**11**	9092700	**16**	9253200
2	9110900	**7**	9H1000	**12**	9256300-095	**17**	9254200
3	SE 966	**8**	8H1337	**13**	1P2116-107	**18**	9255200
4	9092800	**9**	8H1347	**14**	5792002	**19**	9256200
5	9H1285-040	**10**	276A3A1203	**15**	1P2106-107		

9253000, 9253100, 9254000, 9254100, 9255000, 9255100, 9256000, 9256100

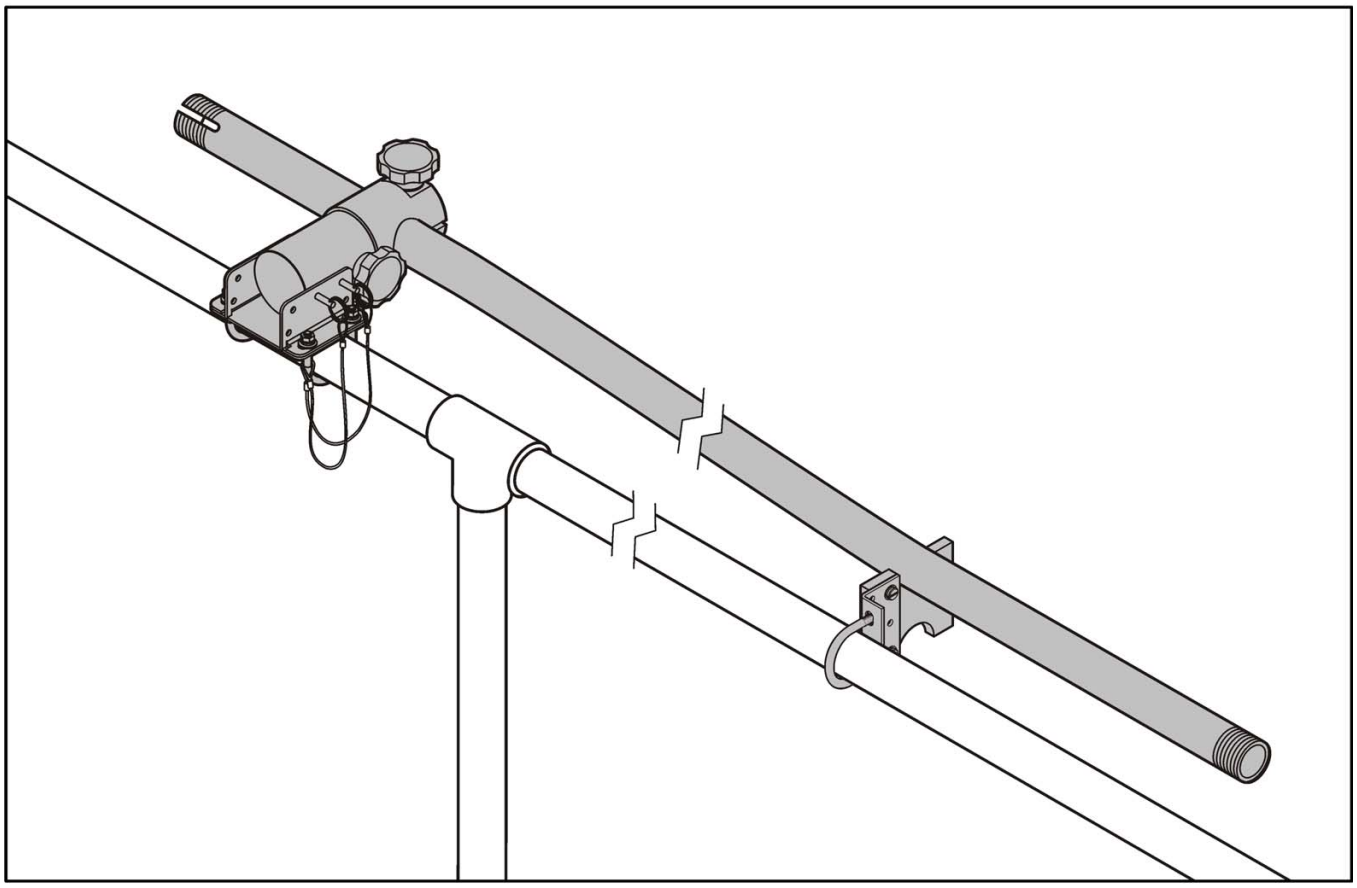

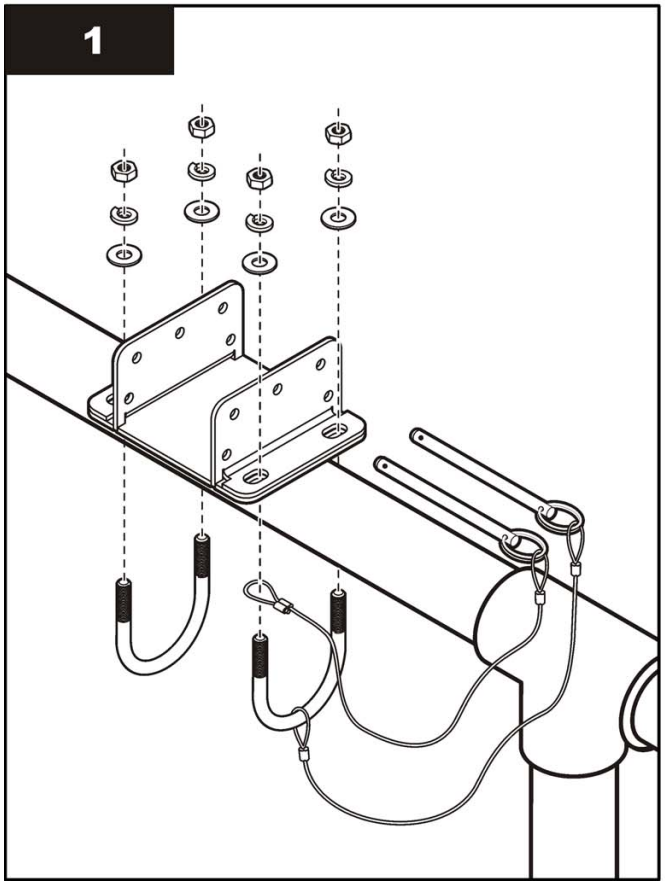

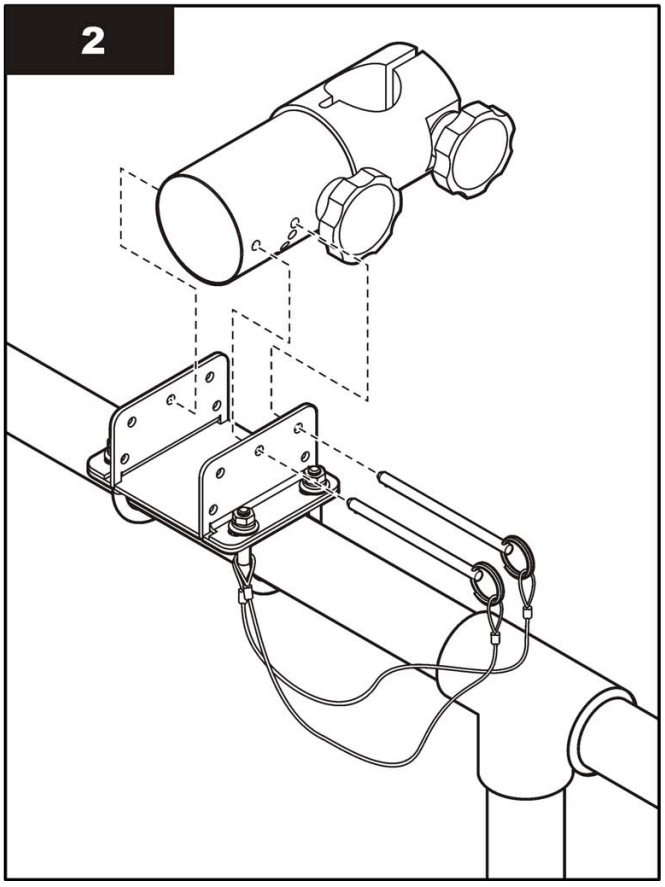

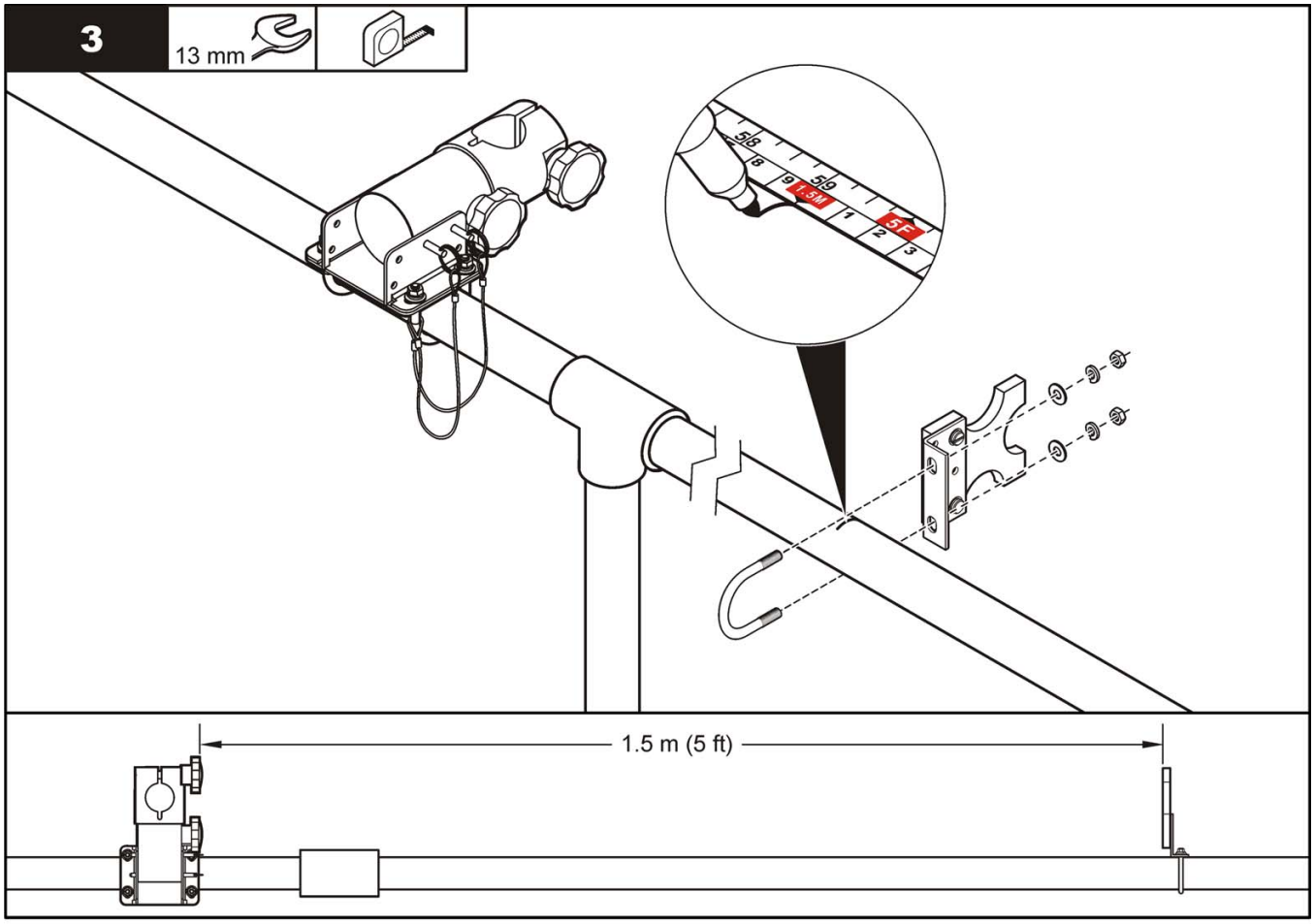
3
13 mm
1.5 m (5 ft)

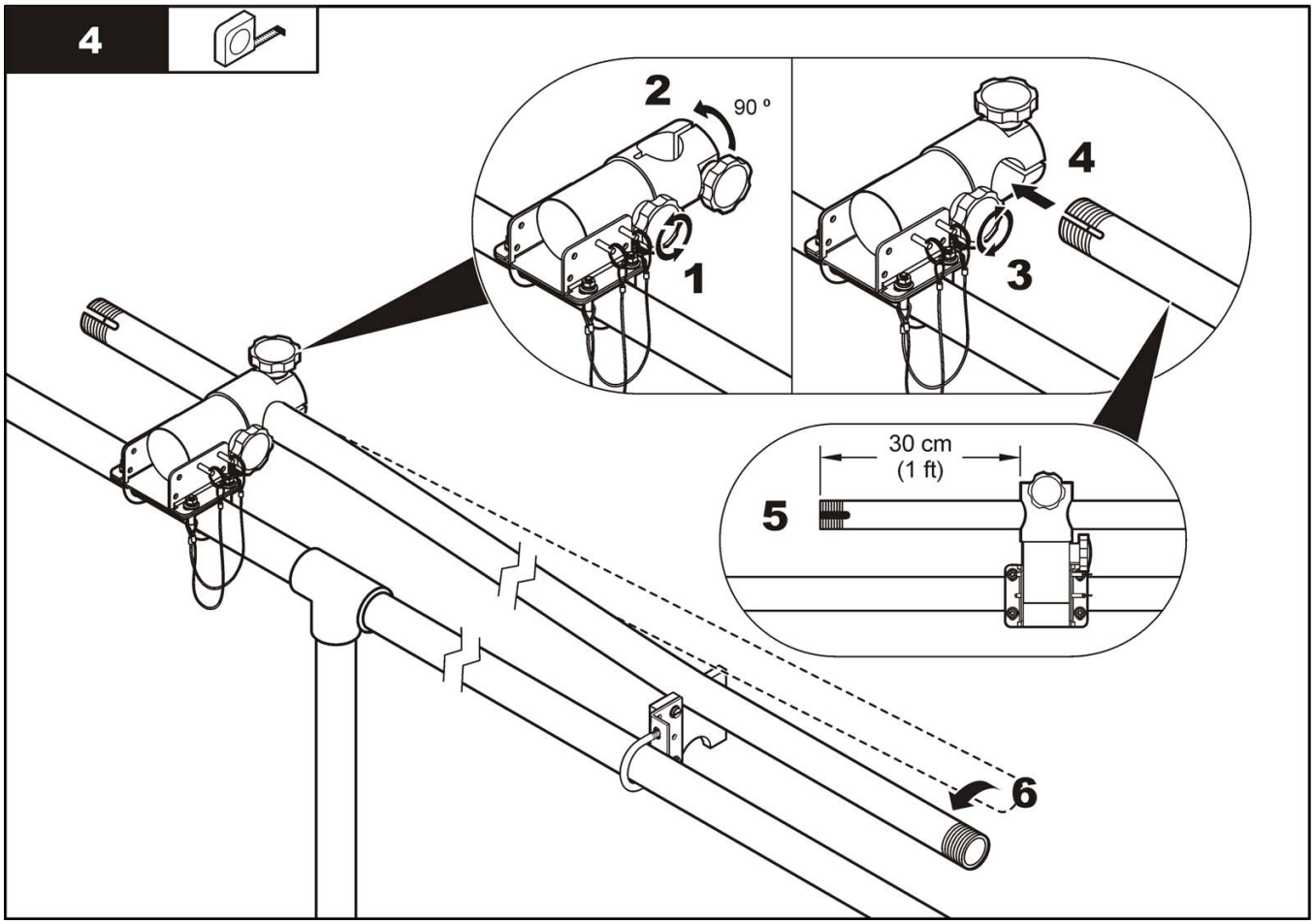
4
2
90 °
1
3
4
30 cm
(1 ft)
5
6

9253000, 9254000, 9255000, 9256000

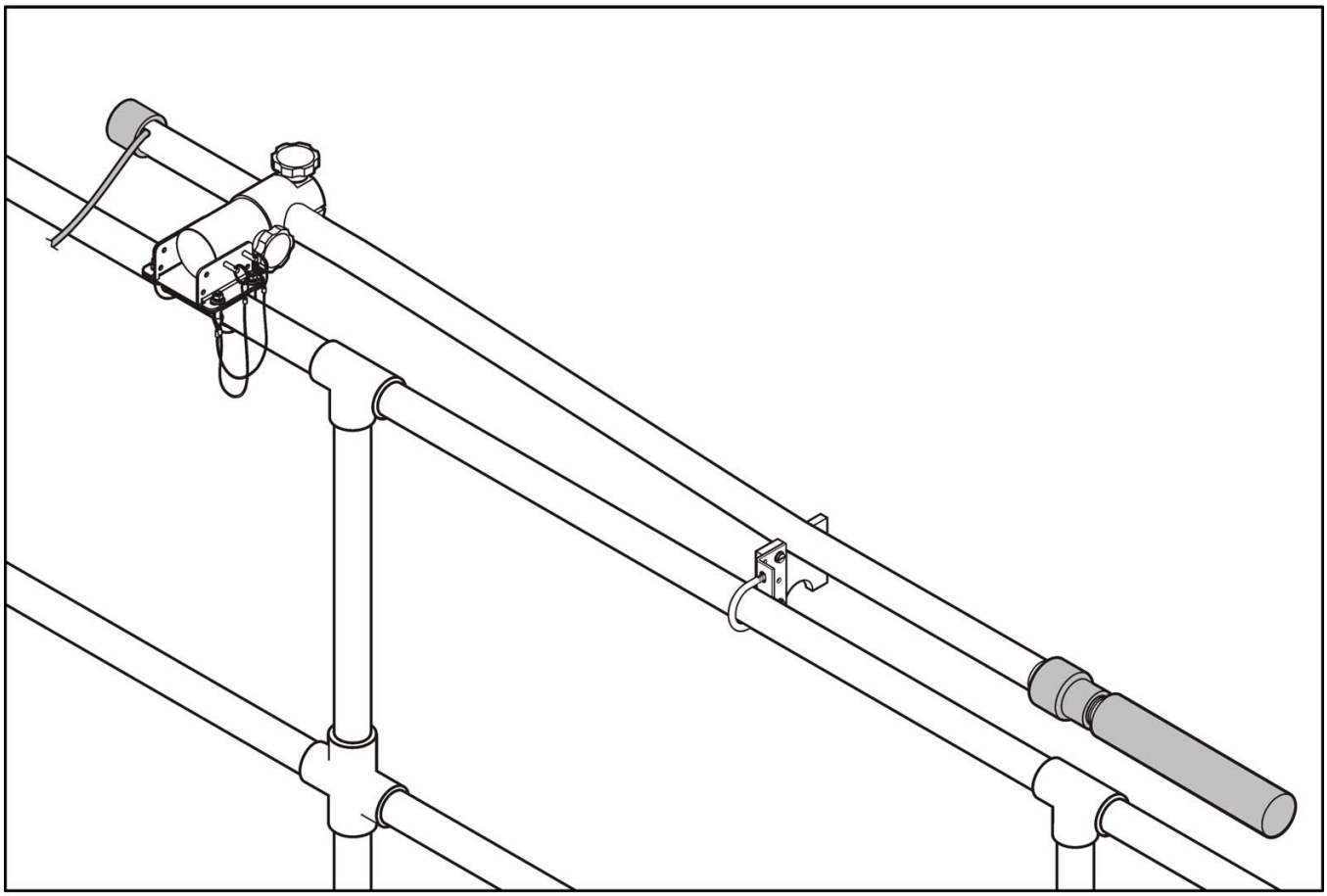

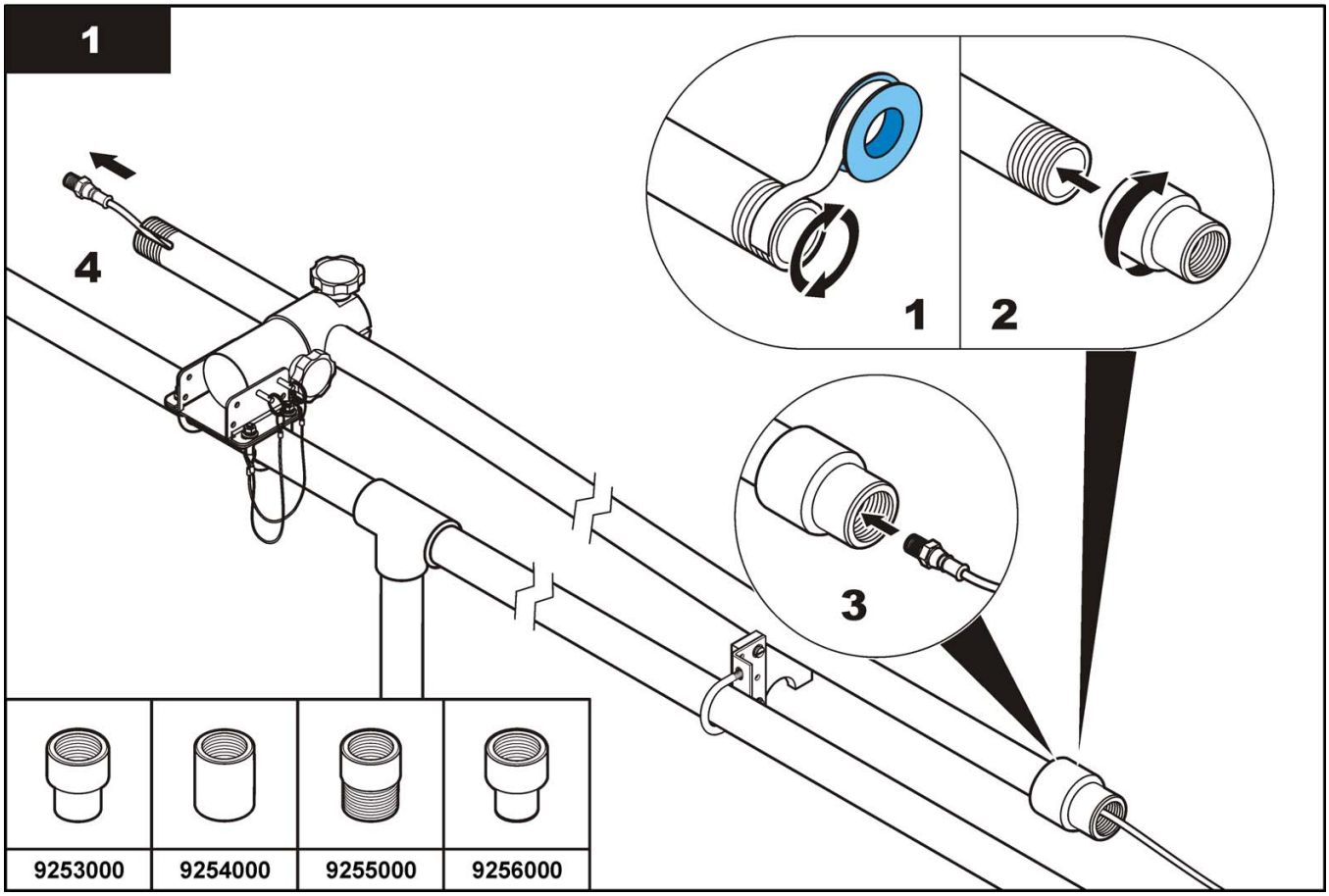

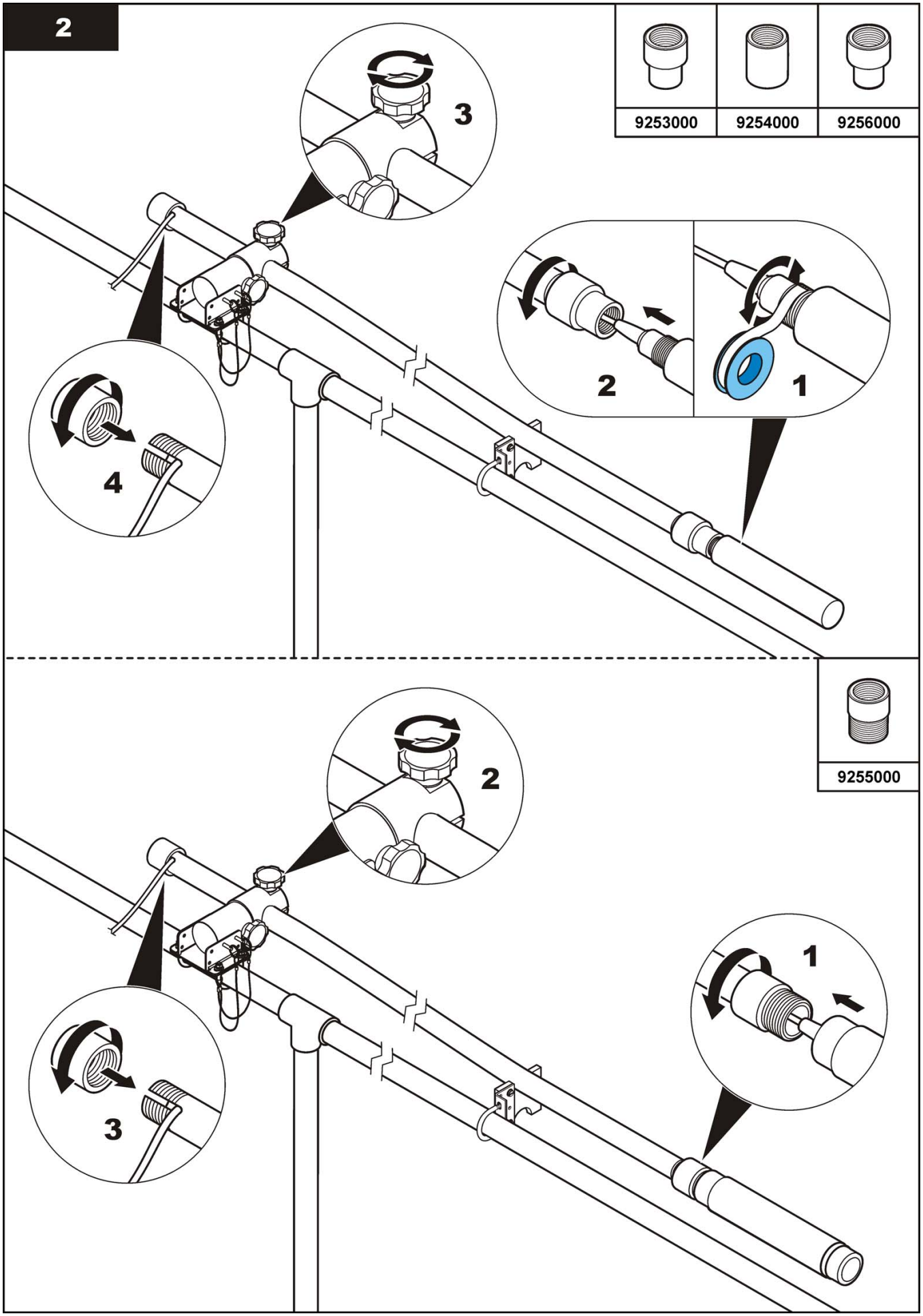
2
3
9253000
9254000
9256000
2
1
4
9255000
2
1
3

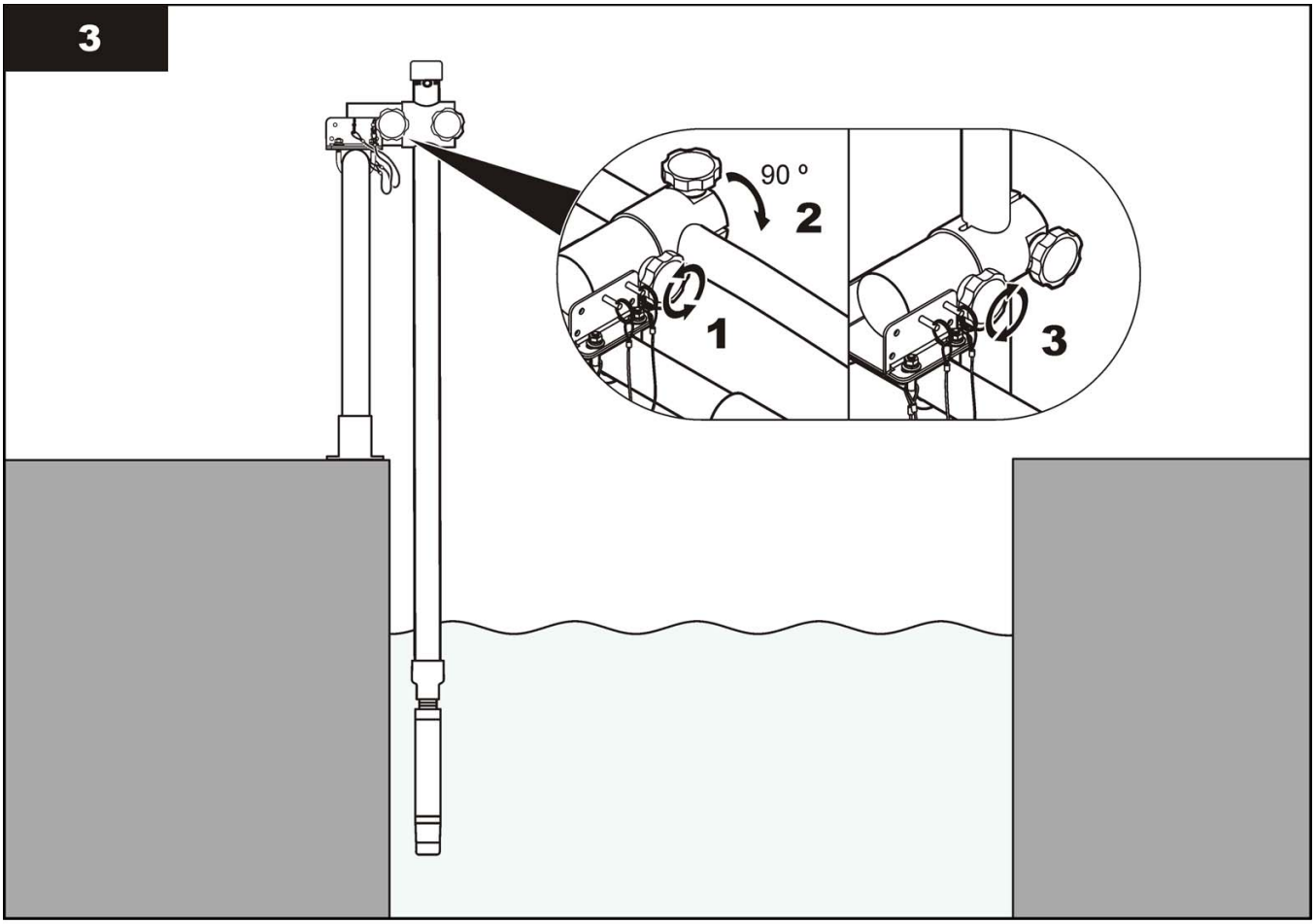
3
90 °
2
1
3

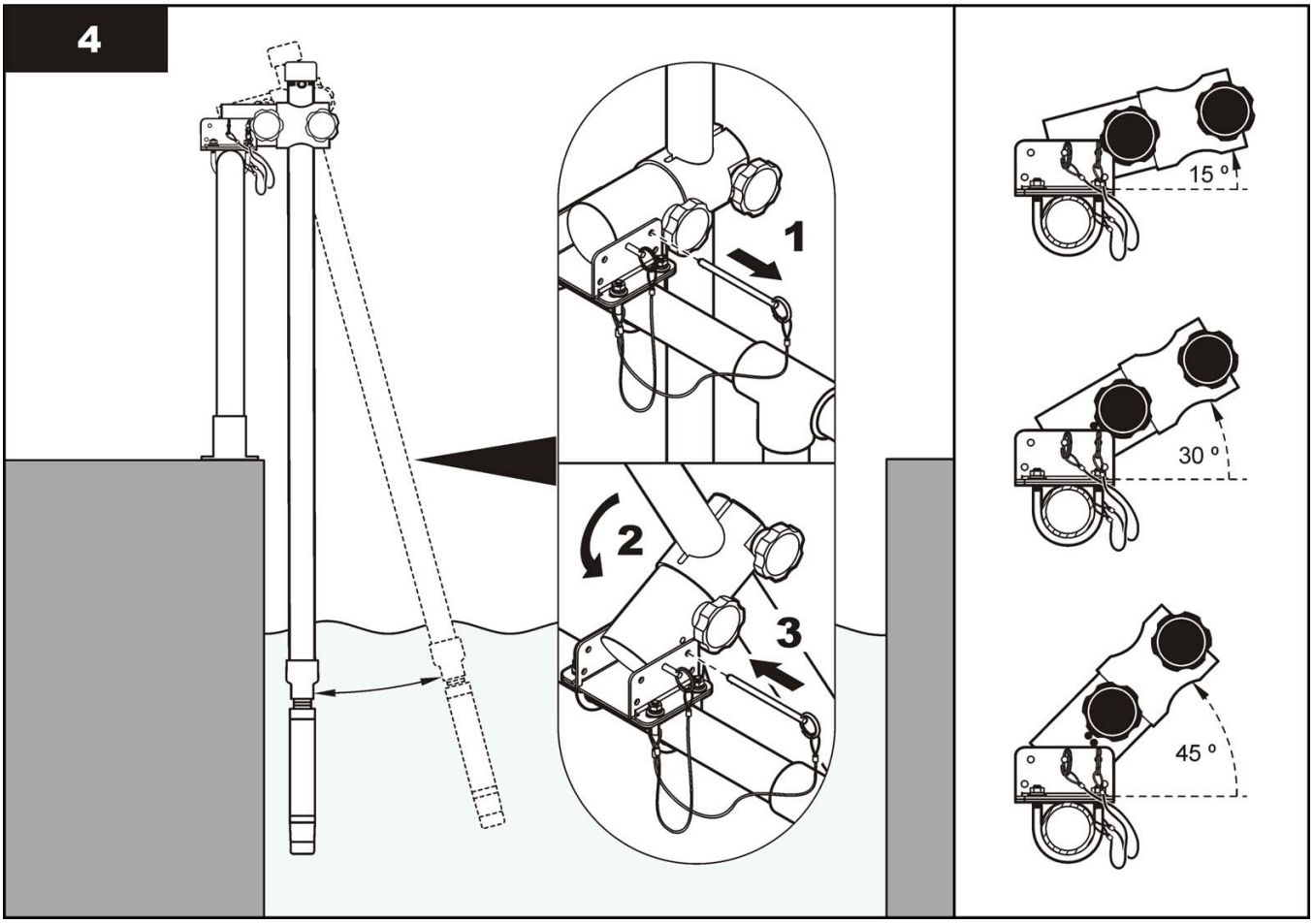
4
1
2
3
15 °
30 °
45 °

9253100, 9254100, 9255100, 9256100

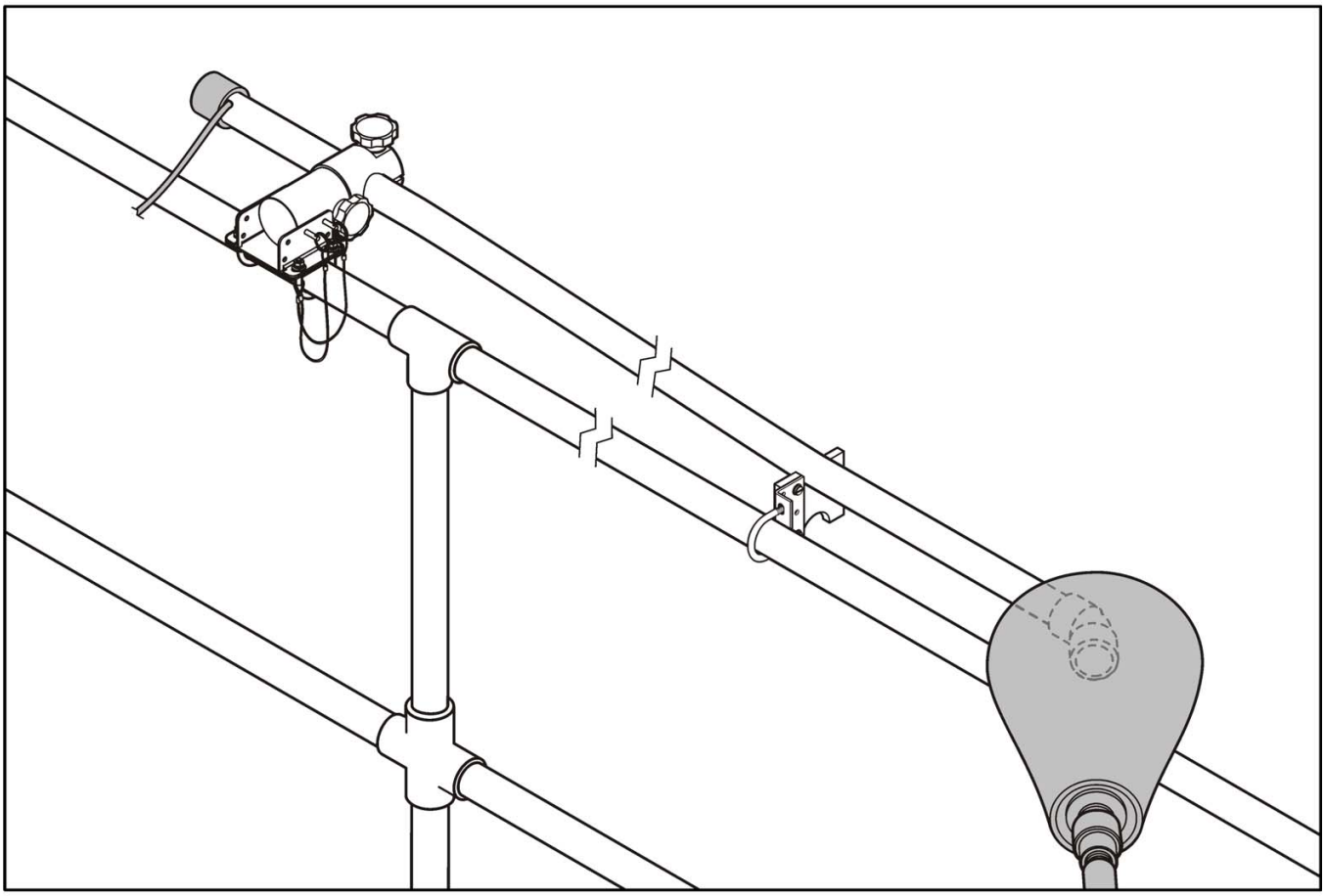

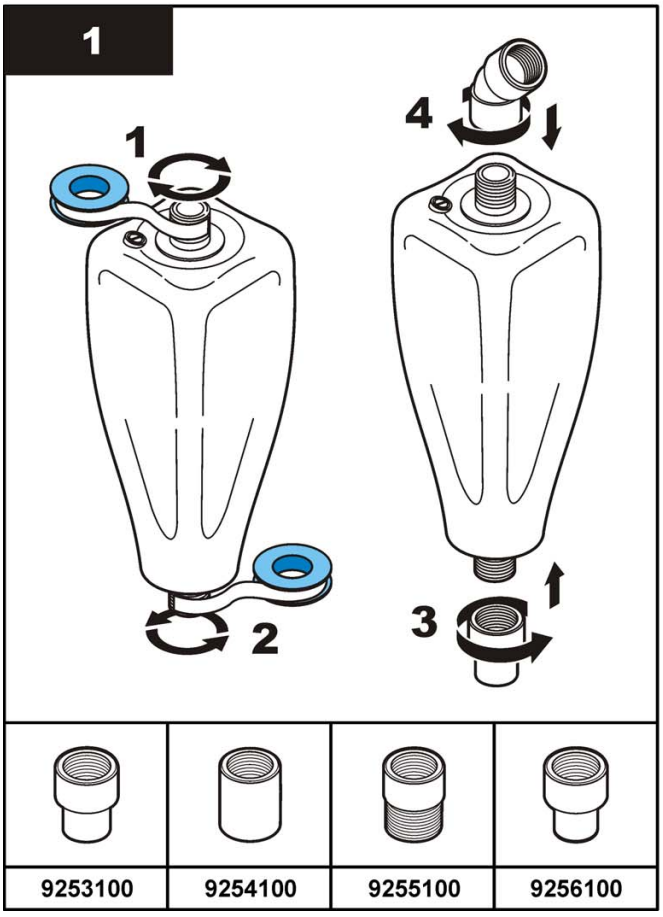

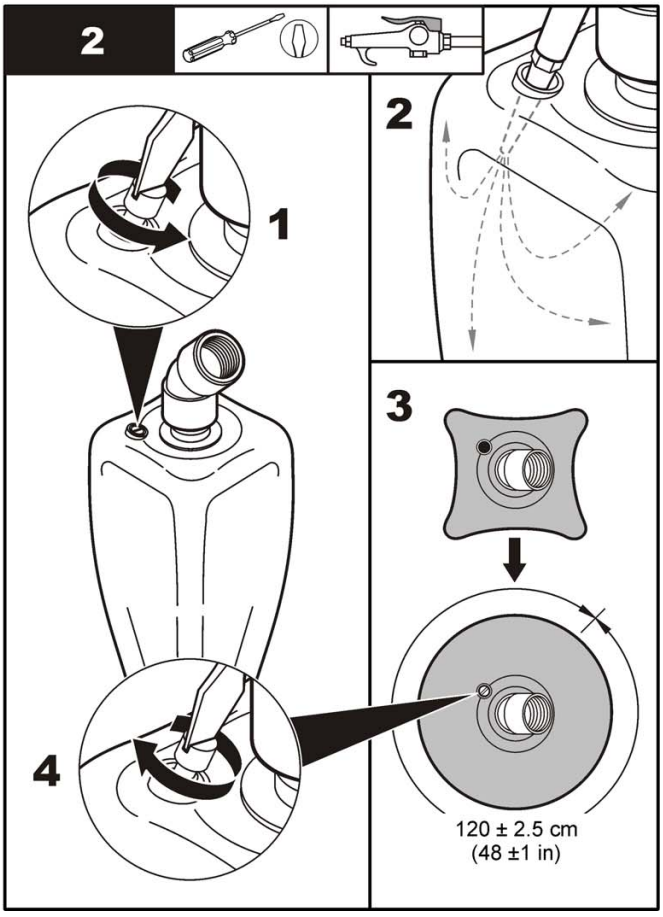

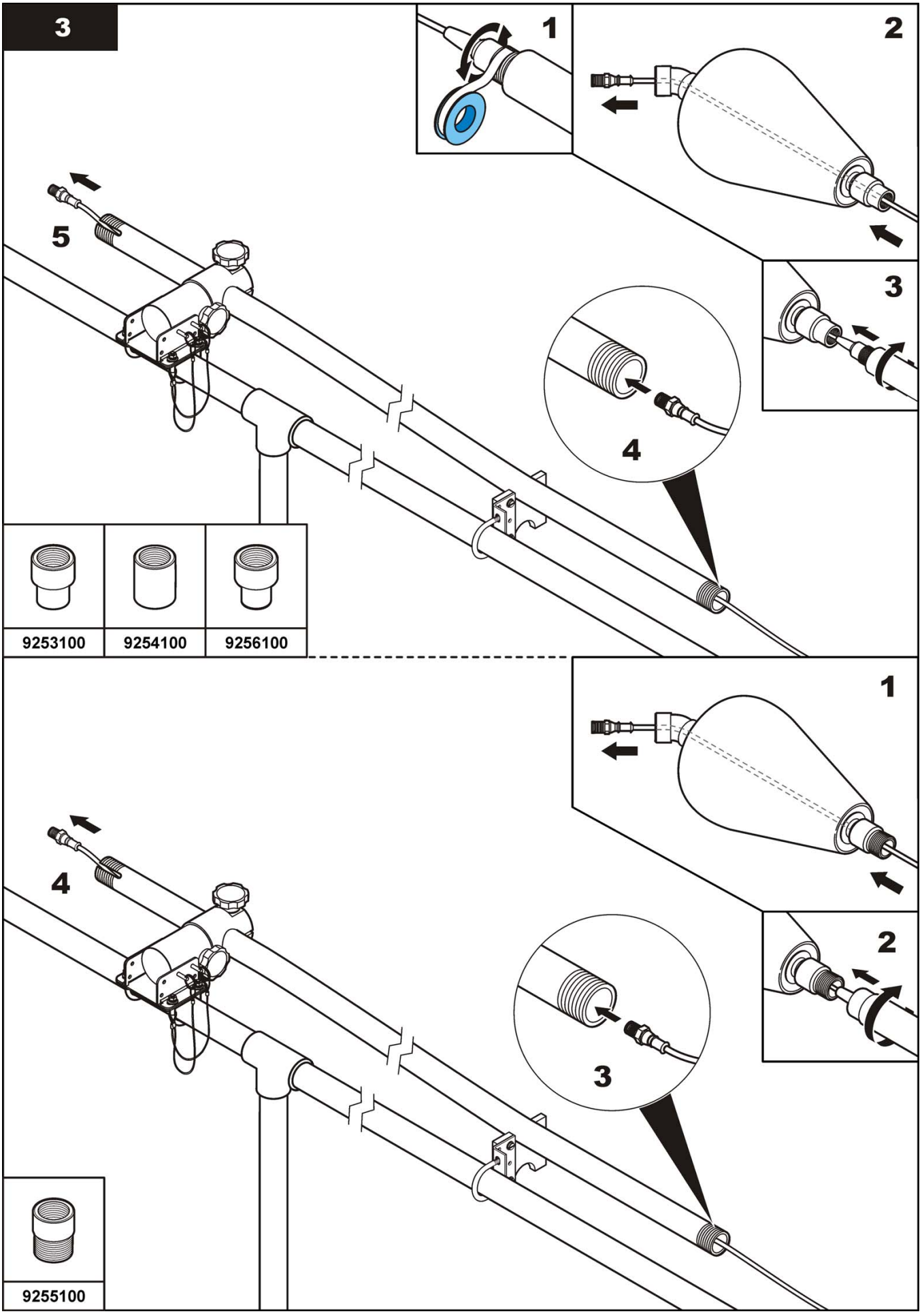
3
1
2
5
3
4
9253100
9254100
9256100
1
4
2
3
9255100

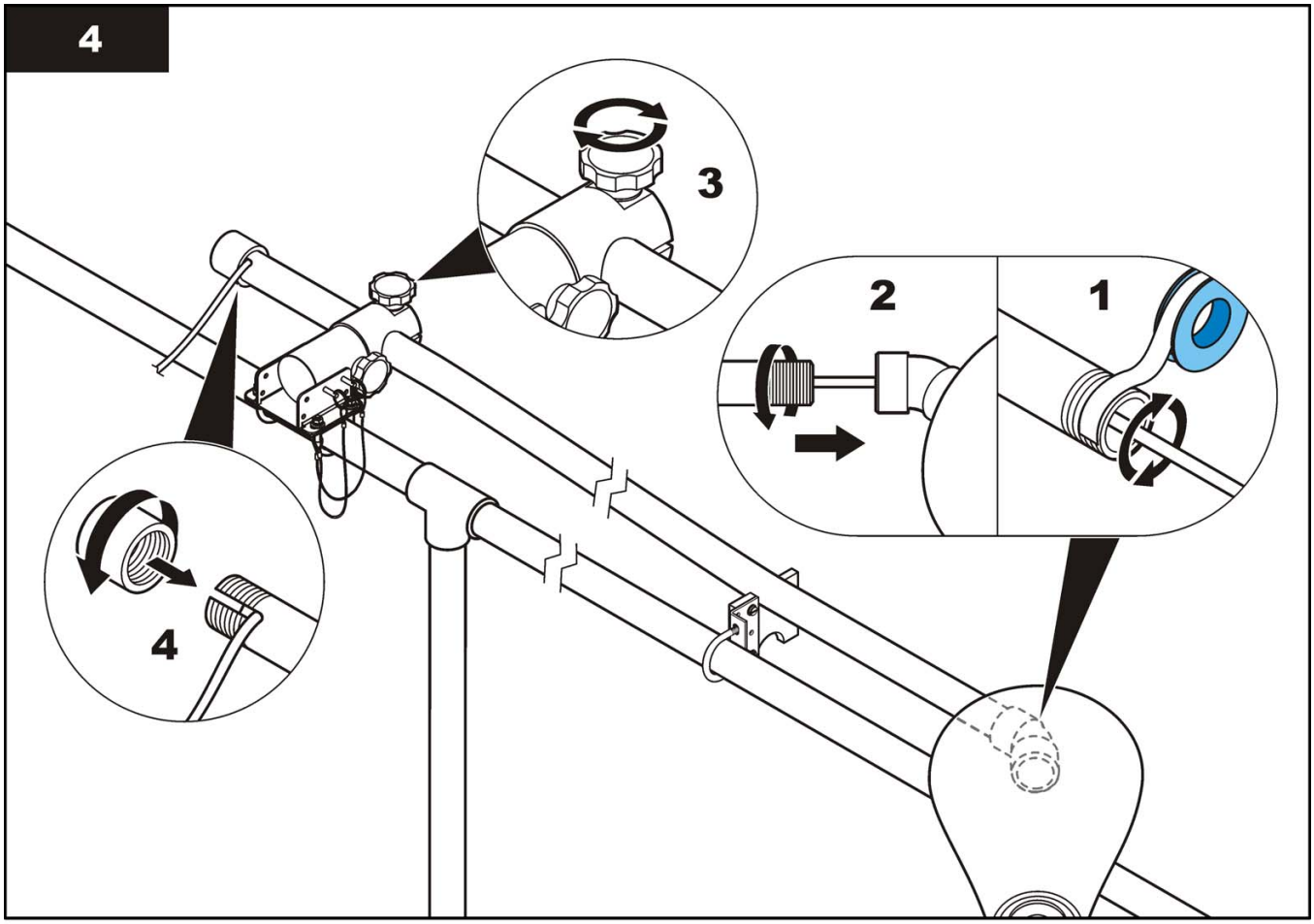
4
3
2
1
4

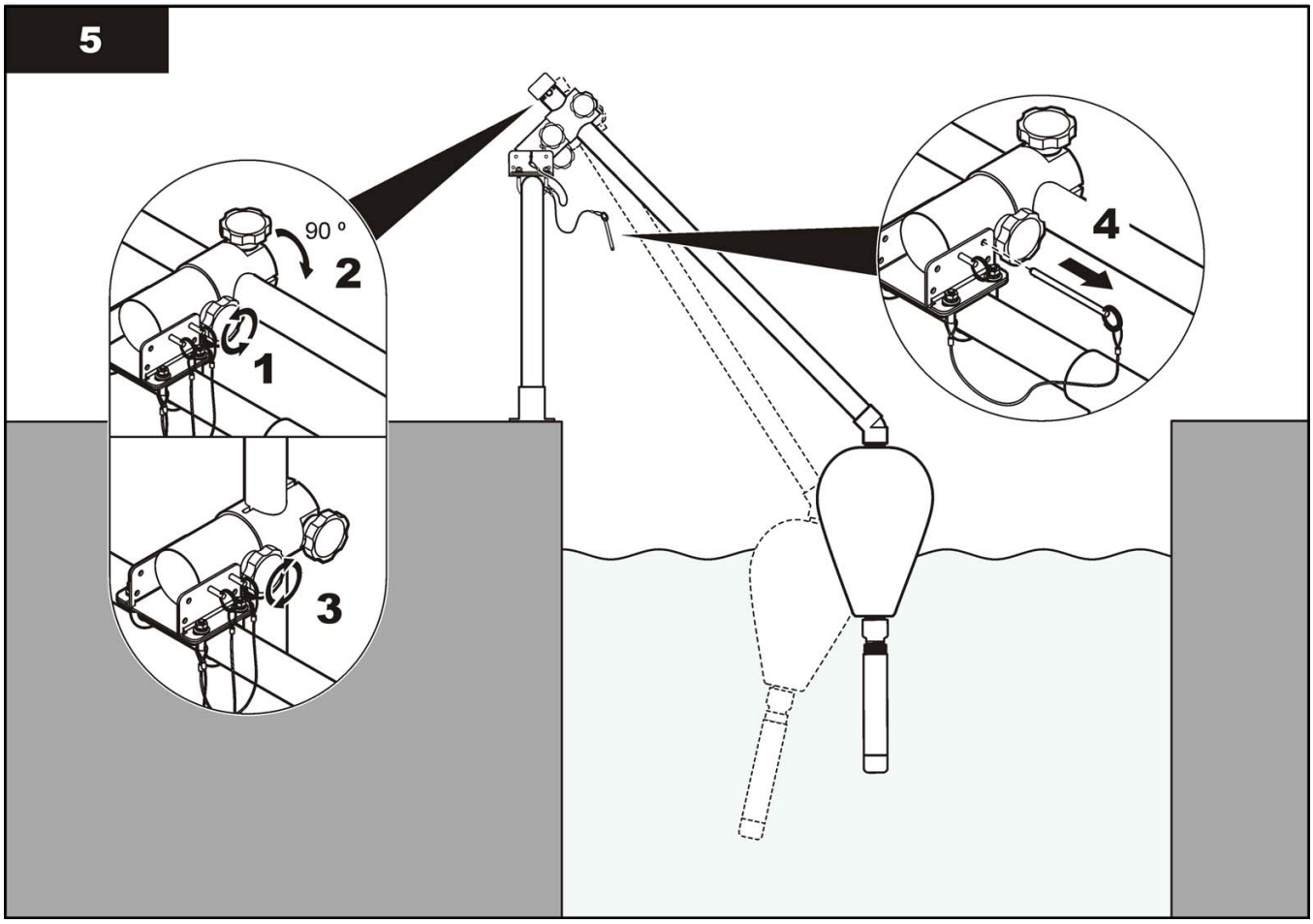
5
90 °
2
1
3
4

HACH COMPANY World Headquarters
P.O. Box 389, Loveland, CO 80539-0389 U.S.A.
Tel. (970) 669-3050
(800) 227-4224 (U.S.A. only)
Fax (970) 669-2932
orders@hach.com
www.hach.com

HACH LANGE GMBH
Willstätterstraße 11
D-40549 Düsseldorf, Germany
Tel. +49 (0) 2 11 52 88-320
Fax +49 (0) 2 11 52 88-210
info@hach-lange.de
www.hach-lange.de

HACH LANGE Sàrl
6, route de Compois
1222 Vésenaz
SWITZERLAND
Tel. +41 22 594 6400
Fax +41 22 594 6499



© Hach Company/Hach Lange GmbH, 2012. All rights reserved. Printed in U.S.A.
02/2012 Edition 1

See Your Data. Trust Your Data.

Mobile Sensor Management (MSM) ensures confidence in your water quality analysis.



HACH®
Be Right™

Claros Enabled

Mobile Sensor Management (MSM)

With remote access to your data—anytime, anywhere—and mobile software guiding your instrument maintenance, MSM removes blind spots and prevents inaccurate information.

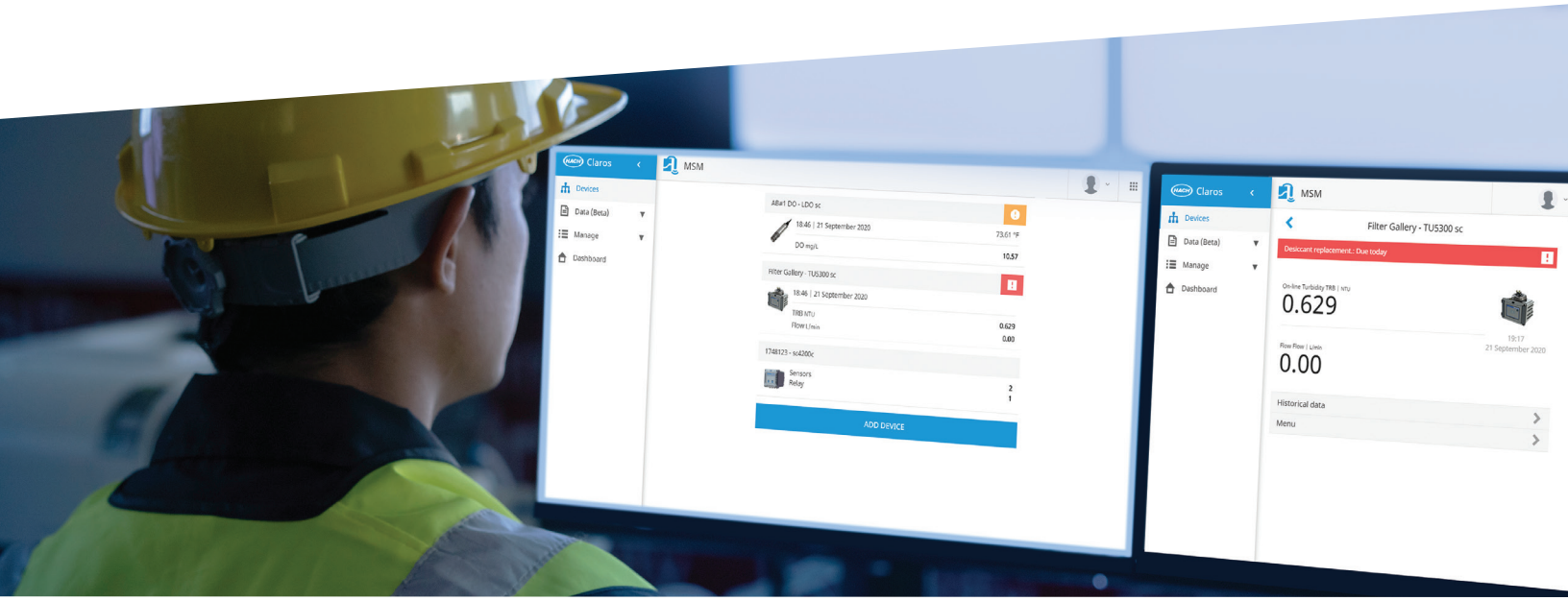

Remote Data Visibility

- Access from any connected device

Real-time View of Instrument Health

- Verify measurement accuracy
- Instrument malfunction alerts
- Proactive maintenance notifications
  – Reduce instrument downtime or missing data

Maintenance Instructions in the Palm of Your Hand

- Step-by-step instructions on any mobile device
  – No User Manuals needed
- Trigger maintenance activities remotely

Safe and Secure Access

- Hosted through Microsoft Azure
- Multi-layered security
- Periodic scans & penetration tests
- Confidentiality with encryption

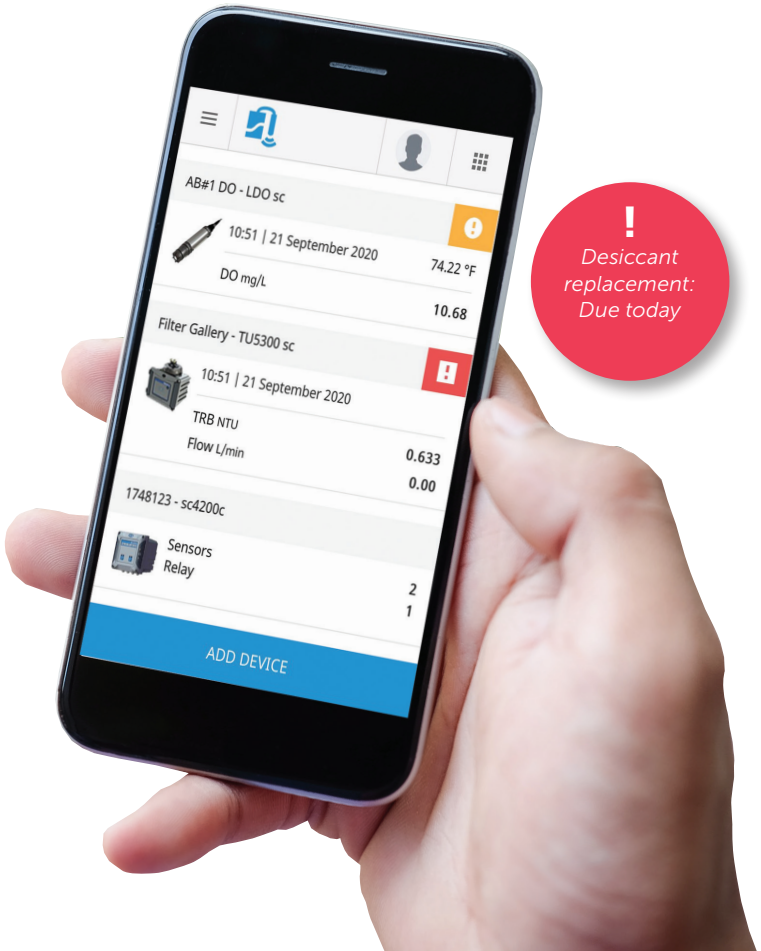

MSM Brochure DOC23.53.30668.Nov20

Overview

Mobile Sensor Management (MSM) is a web-based software solution that provides remote visibility to and maintenance guidance for your instrumentation. It allows you to focus on your highest priorities and ensure accurate data from well-maintained analysis equipment.

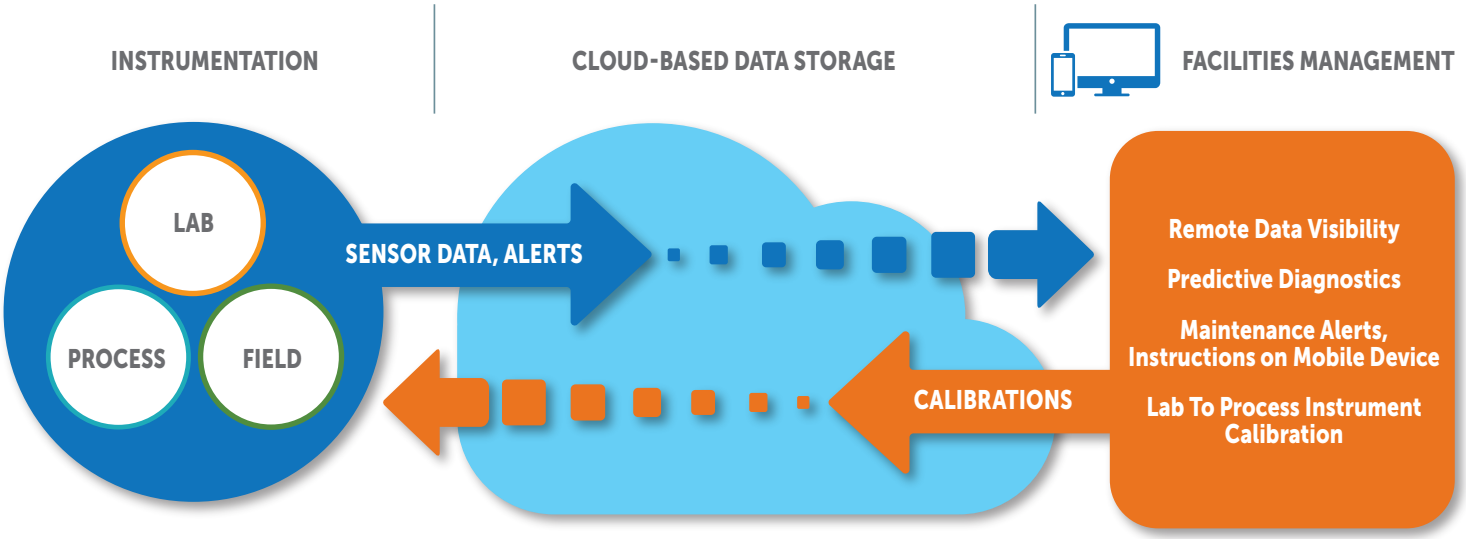

Capture sensor data and maintenance alerts from any connected instrument, even without SCADA.

Transfer data securely through Microsoft's Azure data platform.

Utilize tools to efficiently plan/ perform instrument maintenance and ensure continued measurement accuracy.

Key Functionalities

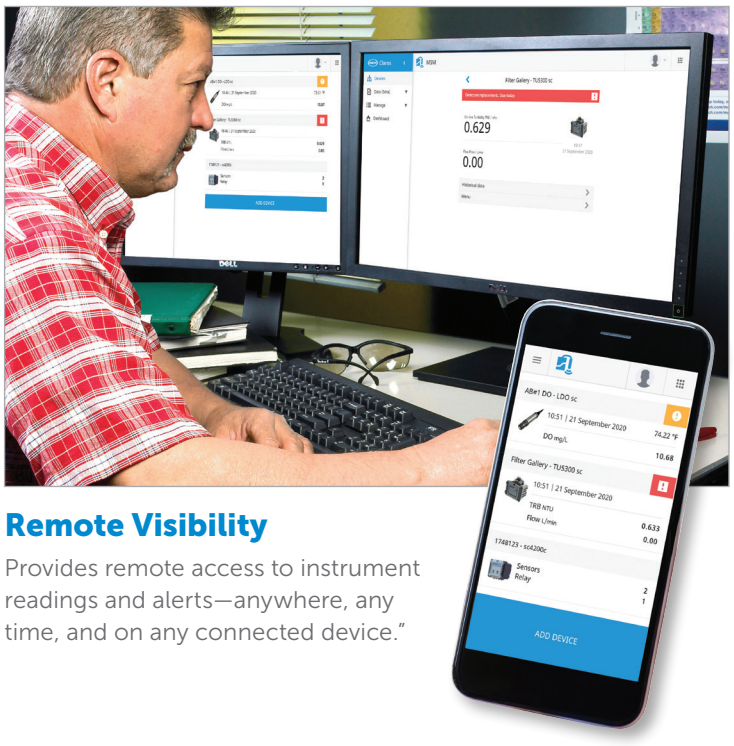

Remote Visibility

Provides remote access to instrument readings and alerts—anywhere, any time, and on any connected device."

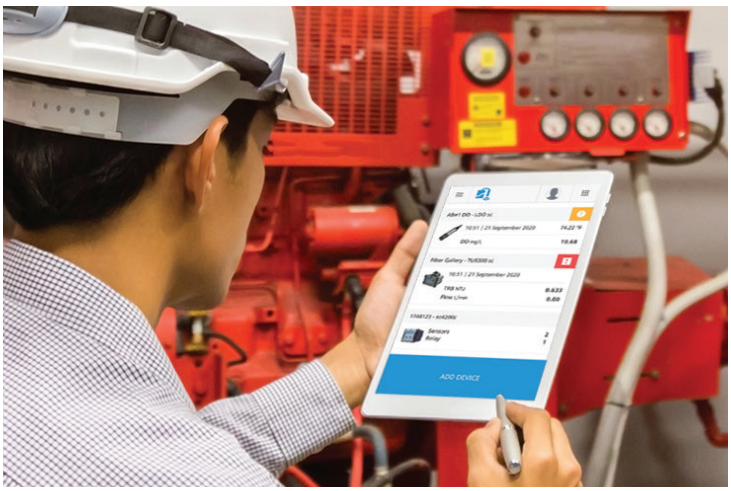

Device Viewer

See the status of all your instrumentation in one easy-to-read list.

Key Functionalities

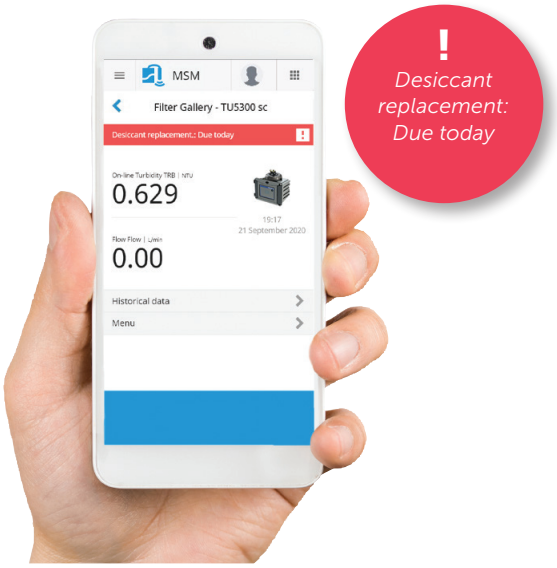

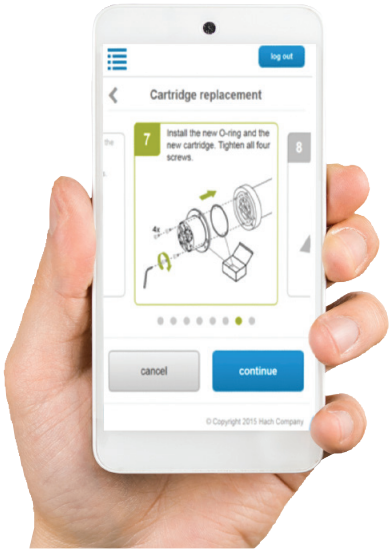

Alerts

Receive alerts for critical needs and reminders to help proactively plan maintenance to ensure continual instrument update and data accuracy.

Maintenance Instructions

Ensure maintenance is performed correctly with step-by-step instructions on any mobile device.

Instrument Calibrations

Verify process instrument measurements versus lab reference values and calibrate remotely.

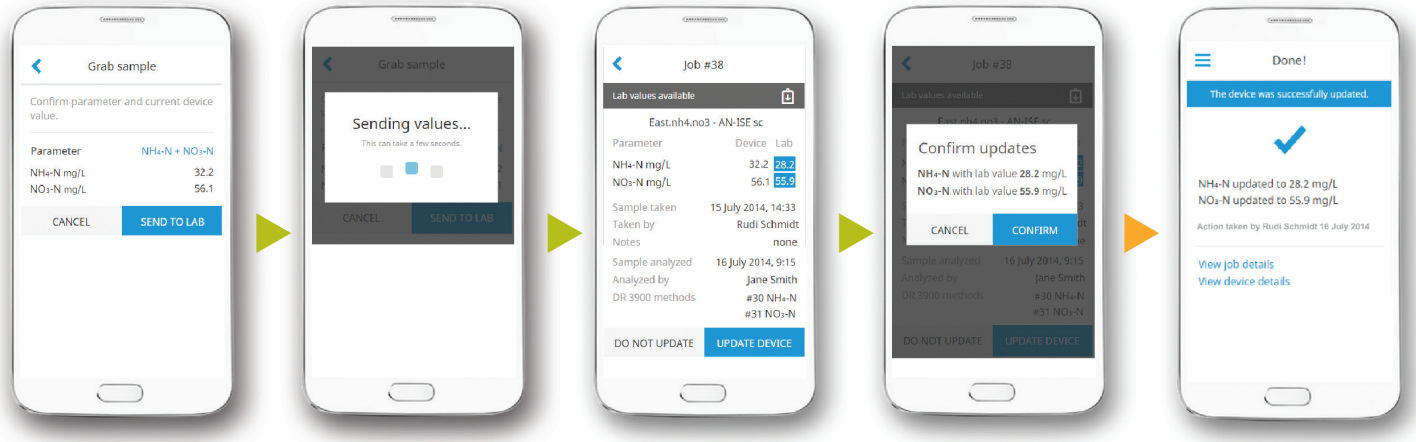

Take process measurement along with grab sample

Send to lab

Compare process and lab results

Send calibration instructions to process instrument

Process instrument calibration complete

MSM Brochure DOC023.53.30668.Nov20

MSM-Compatible Controllers

Mobile Sensor Management is enabled by internet-connected controllers that deliver measurement and instrument data from your compatible Hach sensors and analyzers to the Claros software platform. Several controller options are available to provide the appropriate configuration for your operations.



SC4200c Controller

- 2 sensors
- 4G/3G(GSM), Wi-Fi, LAN
- Profibus DP, 4-20mA, Modbus TCP/IP
- 5 mA outputs



SC1500 Controller

- 2, 4, or 6 sensors
- 4G/3G(GSM/CDMA), Wi-Fi, LAN
- Profibus DP, 4-20mA, Modbus TCP/IP
- 4, 8, or 12 mA outputs

Connect via Existing Instrumentation

The Claros Connector allows you to easily connect existing SC200 and SC1000 Universal Controllers to the Claros platform, thus giving you access to Mobile Sensor Management.*



Claros Connector with SC200 Controller

(Claros Connector comes in SC4200c housing box)

- 2 sensors
- 4G/3G (GSM), Wi-Fi, LAN
- Edge device only; Communication, Outputs, and Display located on attached SC200 Controller



Claros Connector with SC1000 Controller

(Claros Connector comes in SC4200c housing box)

- 2, 4, or 6 sensors
- 4G/3G (GSM), Wi-Fi, LAN
- Edge device only; Communication, Outputs, and Display located on attached SC1000 Controller

**Mobile Sensor Management (MSM) requires a subscription to utilize the software. Full MSM functionality via the Claros Connector will be available in mid-2021.*

HACH®

MSM-Compatible Analysis Instrumentation

		Application Industries						
Parameter	**MSM-Compatible Instrument**	**Municipal Drinking Water**	**Municipal Wastewater**	**Industrial Water**	**Food and Beverage**	**Power**	**Pulp and Paper**	**Other Industries**
Ammonia, Ammonium	AMTAX sc Analyzer ■ ●	✔	✔		✔		✔	Oil & Gas (Upstream)
Ammonium	A-ISE sc Sensor ■ ●		✔		✔		✔	
Ammonium, Nitrate	AN-ISE sc Sensor ■ ●		✔		✔		✔	
Chlorine (Amperometric)	9184sc Analyzer	✔	✔	✔		✔		
Chlorine (Colorimetric)	CL17sc Analyzer ■	✔	✔	✔	✔	✔	✔	Field Use, Oil & Gas (Upstream), Pharmaceutical, Semiconductor
Chlorine (Amperometric)	CL10sc Analyzer	✔	✔	✔	✔	✔		Oil & Gas (Upstream)
Chlorine Dioxide	9187sc Analyzer	✔	✔	✔		✔		Oil & Gas (Upstream)
Conductivity (Contacting)	3400sc Sensor	✔		✔	✔	✔	✔	Oil & Gas (Upstream)
Conductivity (Inductive)	3700sc Sensor	✔	✔	✔	✔		✔	Chemical, Clean Water, Metal & Mining, Oil & Gas (Upstream), Steam Systems, Surface Water
Conductivity (Inductive)	3798 sc Sensor	✔	✔					Surface Water
Dissolved Oxygen	LDO2 Sensor ■ ●	✔	✔	✔	✔		✔	Oil & Gas (Upstream)
Nitrate (Ion Selective Electrode)	N-ISE sc Sensor ■ ●		✔		✔		✔	
Nitrate (Optical, UV Absorption Technology)	NITRATAX clear sc Probe ■	✔		✔				Environmental
Nitrate	NITRATAX eco sc Probe ■	✔	✔	✔				Environmental
Nitrate	NITRATAX plus sc Probe ■	✔	✔	✔	✔		✔	Environmental

■ *Available with Predictive Diagnostic Software (Prognosys)*
● *Available with Mobile Maintenance Instructions*

Continued on next page.

MSM-Compatible Analysis Instrumentation

		Application Industries						
Parameter	**MSM-Compatible Instrument**	**Municipal Drinking Water**	**Municipal Wastewater**	**Industrial Water**	**Food and Beverage**	**Power**	**Pulp and Paper**	**Other Industries**
Organic Constituents	UVAS sc Sensor	✔	✔	✔	✔		✔	Oil & Gas (Upstream)
Ortho-Phosphate	PHOSPHAX sc Analyzer ■ ●	✔	✔		✔		✔	
Ortho-Phosphate	PHOSPHAX Low-Range Analyzer ■	✔	✔	✔	✔		✔	
Ozone (Amperometric)	9185sc Sensor	✔		✔		✔		
pH, ORP (High Purity)	8362sc Sensor			✔	✔	✔		
pH, ORP	pHD Sensor	✔	✔	✔	✔	✔	✔	
pH, ORP	1200-S sc Sensor		✔	✔				
Sludge Level	SONATAX sc Sensor		✔	✔	✔		✔	
Suspended Solids (High Range)	SOLITAX hs-line sc Probe ■ ●		✔	✔	✔	✔	✔	
Suspended Solids (Turbidity)	SOLITAX high-line sc Sensor ■ ●	✔	✔	✔	✔	✔	✔	
Suspended Solids (Turbidity)	SOLITAX in-line sc Sensor ■ ●	✔	✔	✔	✔	✔	✔	
Suspended Solids (Turbidity)	SOLITAX ts-line sc Sensor ■ ●	✔	✔	✔	✔	✔	✔	
Suspended Solids (Turbidity)	TSS sc Sensor	✔	✔	✔	✔	✔	✔	Environmental, Pure Water
Turbidity (High Range)	SS7sc (Surface Scatter 7sc) Turbidimeter	✔	✔	✔	✔		✔	
Turbidity	SOLITAX t-line sc Sensor	✔	✔		✔	✔	✔	
Turbidity	TU5300/5400 Turbidimeters ■	✔	✔		✔	✔		Pharmaceutical
Turbidity	Ultraturb sc Turbidimeter							Maritime

■ *Available with Predictive Diagnostic Software (Prognosys)*
● *Available with Mobile Maintenance Instructions*

Claros™

The Water Intelligence System from Hach®

Mobile Sensor Management is part of Claros, the Water Intelligence System from Hach®. This suite of digital solutions helps water professionals with regulatory compliance, process optimization, cost savings and remote operations. Whether it's instrument, data or process management, Claros solutions combine smart instrumentation with innovative software to eliminate uncertainty, reduce costs, and improve efficiency.

Learn more at: hach.com/Claros

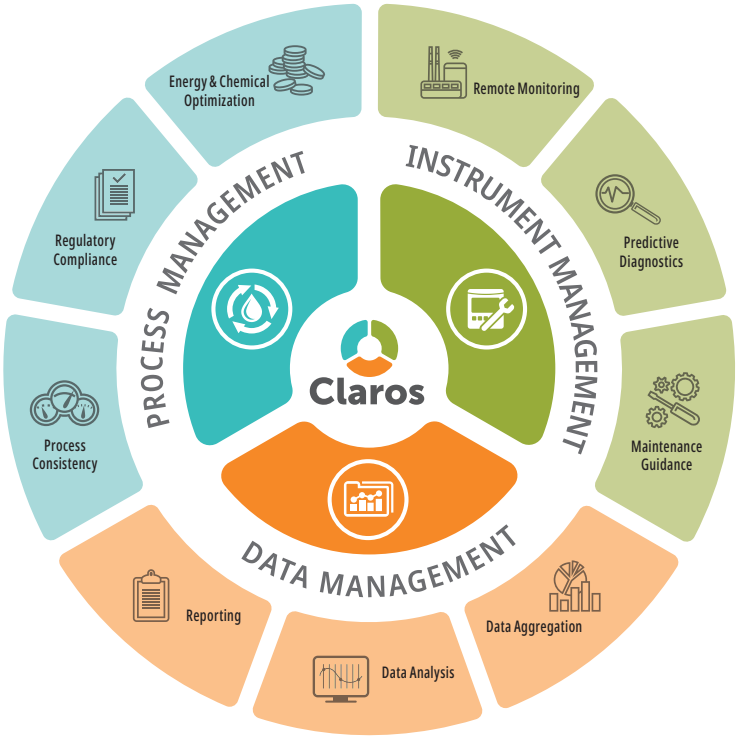

Service

With Hach Service, you have a global partner who understands your needs and cares about delivering timely, high-quality service you can trust. Our service team brings unique expertise to help you maximize instrument uptime, ensure data integrity, maintain operational stability, and reduce compliance risk. Be confident with Hach Service.

Learn more at: hach.com/Service

To learn more about Mobile Sensor Management, contact your local Hach Representative or visit:

hach.com/Claros-Instrument-Management

DOC033.53.30668.Nov20

HACH World Headquarters: Loveland, Colorado USA

United States:	800-227-4224 tel	970-669-2932 fax	orders@hach.com
Outside United States:	970-669-3050 tel	970-461-3939 fax	int@hach.com

hach.com

©Hach Company, 2020. All rights reserved.
In the interest of improving and updating its equipment, Hach Company reserves the right to alter specifications to equipment at any time.

HACH®
Be Right™

Appendix D: Process Flow Diagrams

TOTAL
QAVG - 2 MGD
QPEAK - 6 MGD
RAS FLOW - 8 MGD

2 MGD WWTP (EXISTING)

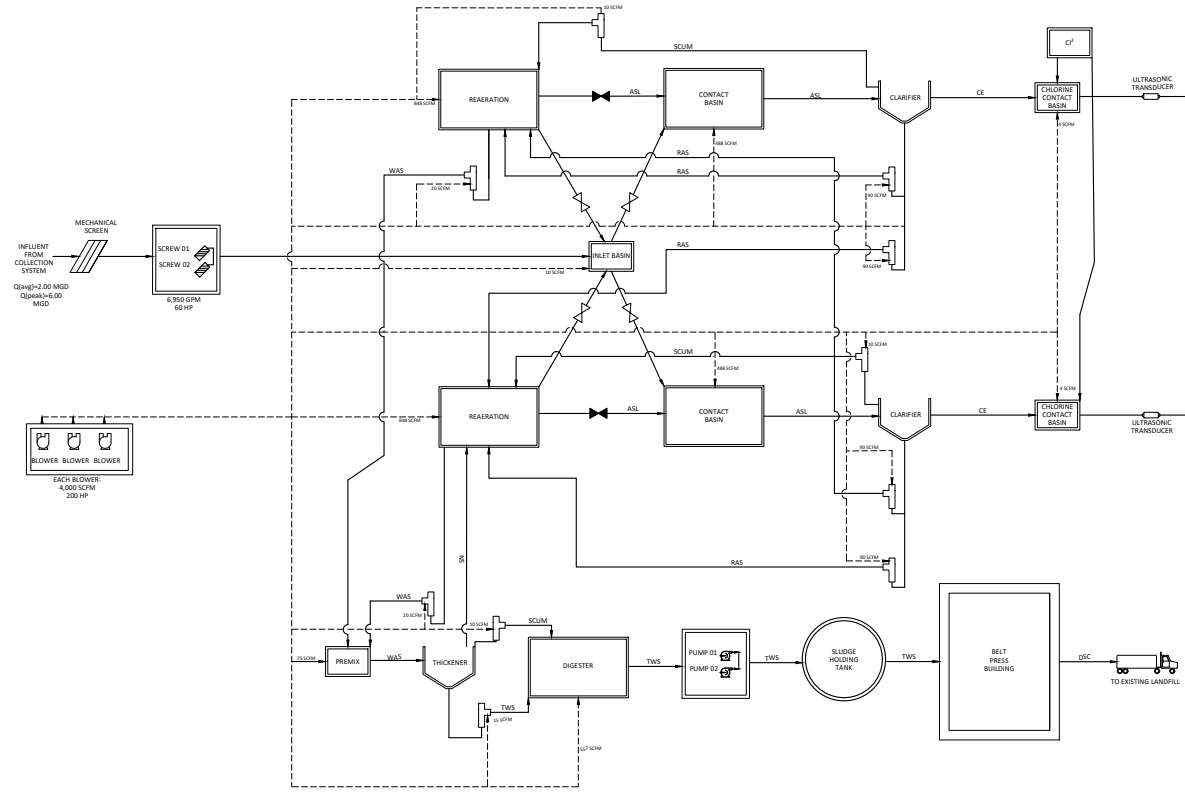

Kimley»Horn
11700 Katy Freeway, Suite 325 Houston, Tx 77079 P: 281-291-5900
TBPE No. 928

No.	By	Date	Revision

WEST UNIVERSITY PLACE
SEWAGE TREATMENT PLANT

EXISTING
PROCESS FLOW
DIAGRAM

DATE	JULY 2019
DESIGN	MPM
DRAWN	MPM
CHECKED	MAS
MM NO.	067814 KXU

SHEET

D-EXIST

K:\HOU_Civil\067814 2100 Wat Ltr\WWTP\D_CAD\Exhibit\Existing Process Flow Diagram.dwg 6/7/2019 11:43 AM

TOTAL
QAVG - 2 MGD
QPEAK - 6 MGD
RAS FLOW - 8 MGD

2 MGD WWTP (PROPOSED)

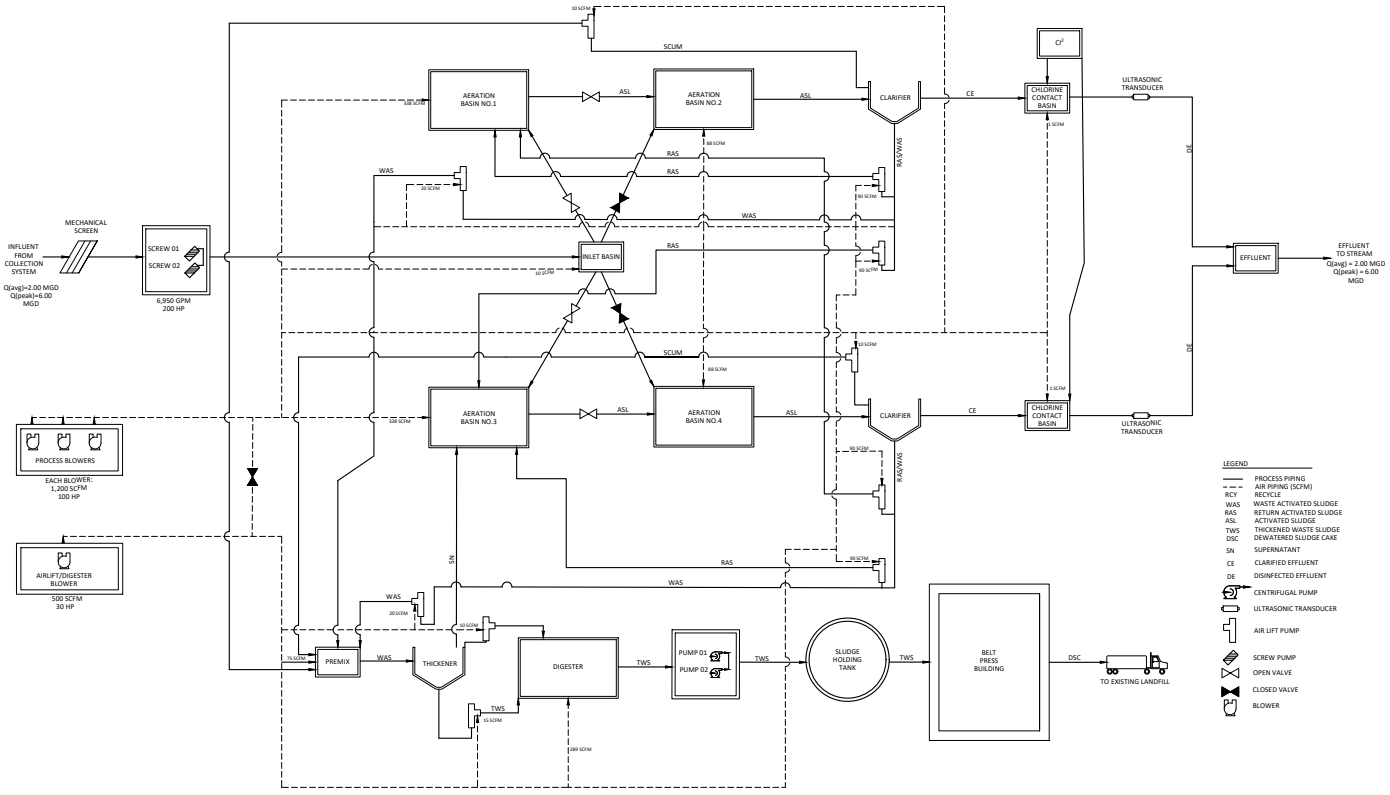

Kimley»Horn
11700 Katy Freeway, Suite 325 Houston, Tx 77079 P: 281-291-5900
TBPE No. 928

No.	By	Date	Revision

WEST UNIVERSITY PLACE
SEWAGE TREATMENT PLANT

PROPOSED PROCESS
FLOW DIAGRAM

DATE	JULY 2019
DESIGN	MPM
DRAWN	MPM
CHECKED	MAE
PM/AM/C	087874.000

SHEET

D-PROP

K:\HOU_Civil\087874\2100\Wet Lit\WWTP\D_CAD\Drafting\Process Flow Diagram.dwg, 6/7/2019 7:14:05 AM

Appendix E: Site Layout Exhibit

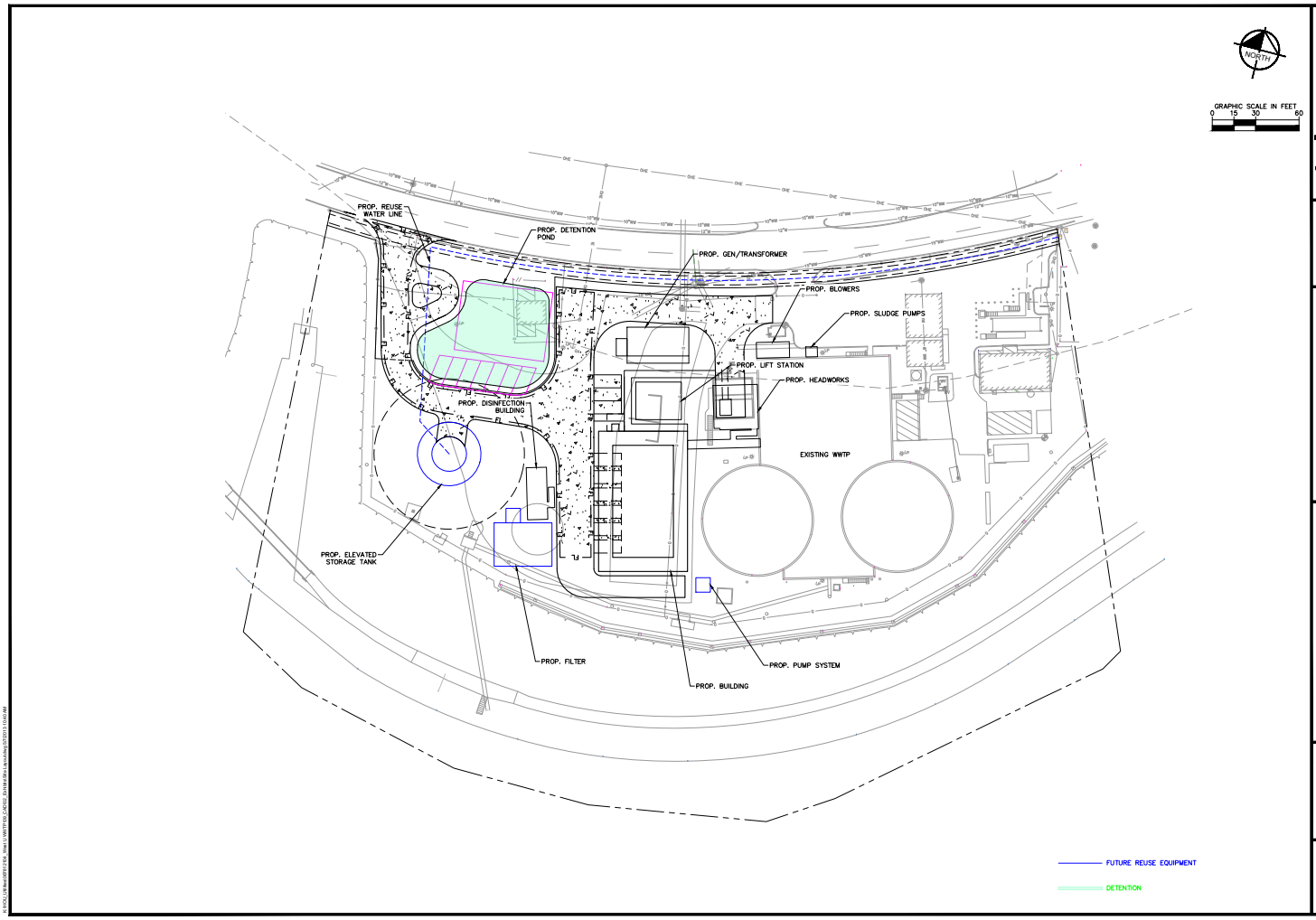

Kimley»Horn
11700 KATY FREEWAY, SUITE 800, HOUSTON, TEXAS 77079
TBPE NO. 928
PHONE: 281-561-8000

No.	Revision	By	Date

CITY OF WEST UNIVERSITY PLACE, TX
WASTEWATER TREATMENT PLANT IMPROVEMENTS

SITE LAYOUT

DATE:	JUNE 2022
DESIGN:	MPM
DRAWN:	HLR
CHECKED:	KPK
KHA NO.:	067812104

SHEET

APPENDIX E

Appendix F: Survey Exhibit

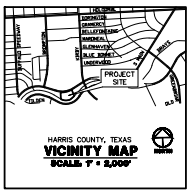

BENCHMARK — PUBLISHED ELEVATION = 44.30

ALL ELEVATIONS SHOWN HEREON ARE BASED ON HARRIS COUNTY FLOODPLAIN REFERENCE MARK NO. 048D3D, BEING A BRASS DISC FROM THE INTERSECTION OF NORTH BRAESWOOD BOULEVARD AND AUBREY DRIVE, TRAVEL SOUTH ON AUBREY DRIVE 0.2 MILES TO THE WINDOL CHEEK BRAYS BAYOU MONUMENT, 11.0 FEET ON THE EAST SIDEWALK WITH A PUBLISHED ELEVATION OF 44.30 FEET, NAVD 1988 (2001 ADJ.)

TEMPORARY BENCHMARK "A" — ELEVATION = 46.93

TBM "A" BEING A CUT BOX ON A CONCRETE WALL APPROXIMATELY 20.50 FEET SOUTHEAST OF THE BEST FIT POINT OF THE NORTHERN MOST SOUTHEAST TRACT LOCATION ON THE WEST SIDE OF THE NORTH BRAESWOOD BOULEVARD

TEMPORARY BENCHMARK "B" — ELEVATION = 46.99

TBM "B" BEING A CUT BOX ON CONCRETE, 29.50 FEET SOUTHWEST OF FOUND 5/8 INCH IRON ROD STAMPED "LANDTECH" LOCATED ALONG THE EAST BOUNDARY LINE OF THE HEREIN DESCRIBED TRACT, 42.27 FEET OF THE SOUTH RIGHT-OF-WAY LINE OF NORTH BRAESWOOD BOULEVARD.

NORTH

GRAPHIC SCALE: 1" = 30'

30 0 30 60 90 Feet

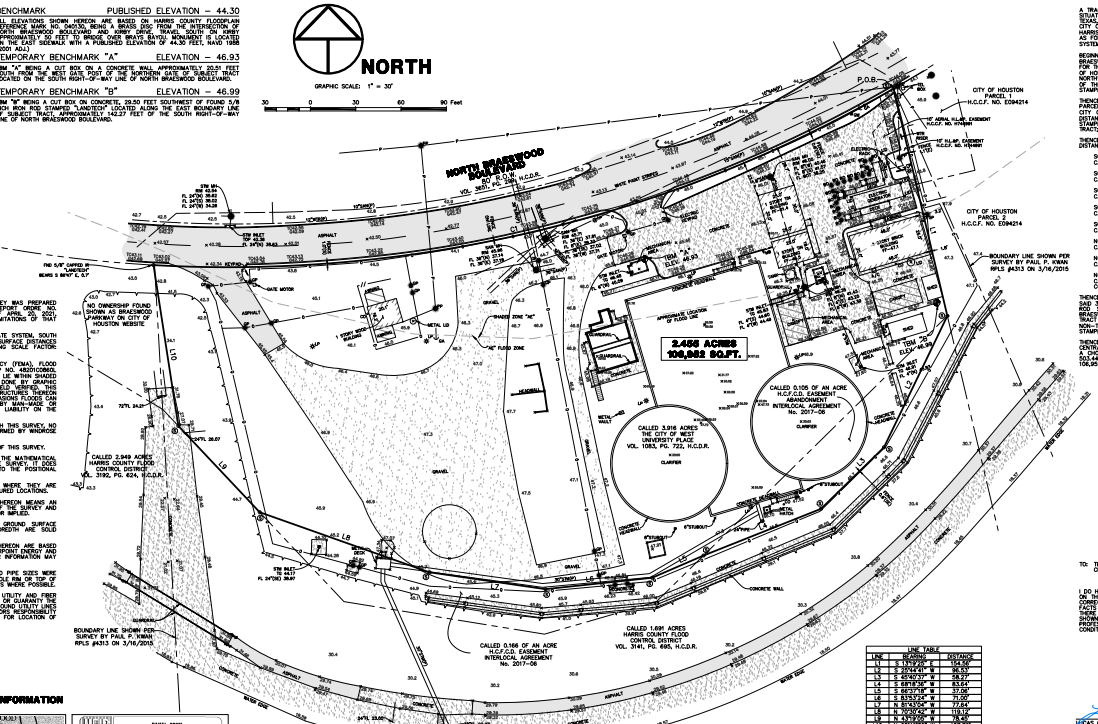
NORTH BRAESWOOD BOULEVARD
50' R.O.W.
VOL. 3871, PG. 1
H.C.D.R.
P.O.B.
CITY OF HOUSTON PARCEL 1
H.C.C.F. NO. E094214
CITY OF HOUSTON PARCEL 2
H.C.C.F. NO. E094214
2.455 ACRES
106,952 SQ.FT.
CALLED 3.916 ACRES THE CITY OF WEST UNIVERSITY PLACE VOL. 1083, PG. 722, H.C.D.R.
CALLED 0.105 OF AN ACRE H.C.F.C.D. EASEMENT ABANDONMENT/ INTERLOCAL AGREEMENT No. 2017-06
CALLED 0.166 OF AN ACRE H.C.F.C.D. EASEMENT INTERLOCAL AGREEMENT No. 2017-06
CALLED 1.691 ACRES HARRIS COUNTY FLOOD CONTROL DISTRICT VOL. 3141, PG. 695, H.C.D.R.
CALLED 2.949 ACRES HARRIS COUNTY FLOOD CONTROL DISTRICT VOL. 3192, PG. 624, H.C.D.R.
BOUNDARY LINE SHOWN PER SURVEY BY PAUL P. KWAN RPLS #4313 ON 3/16/2015
BOUNDARY LINE SHOWN PER SURVEY BY PAUL P. KWAN RPLS #4313 ON 3/16/2015
NO OWNERSHIP FOUND SHOWN AS BRAESWOOD PARKWAY ON CITY OF HOUSTON WEBSITE
BRAESWOOD PARKWAY
BRIDGEWOOD DRIVE
AUBREY DRIVE
ASPHALT
CONCRETE
GRAVEL
WOOD FENCE
CHAINLINK FENCE
WROUGHT IRON FENCE
BARBED WIRE FENCE
CONCRETE WALL
BRICK WALL
WATER EDGE
BANK EDGE
FND 5/8" CAPPED IN CONCRETE BEING 5.94'N & 5.97'E
FND 5/8" CAPPED IN CONCRETE BEING 5.94'N & 5.97'E
SET 5/8" CAPPED IN CONCRETE
SET 5/8" CAPPED IN CONCRETE
SET 5/8" CAPPED IN CONCRETE

Appendix G: Geotechnical Report

GEOTECHNICAL ENGINEERING REPORT

WEST U WWTP IMPROVEMENTS

HOUSTON, TEXAS

GEOTECHNICAL ENGINEERING REPORT

West U WWTP Improvements

Houston, Texas

Prepared by:



Gorrondona Engineering Services, Inc.

Prepared for:

Kimley-Horn and Associates, Inc.
11700 Katy Freeway, Suite 800
Houston, Texas 77079

Attention: Mr. Mike Shelton, PE, AICP

June 15, 2022

GES Project No. 21-0277

TEXAS ENGINEERING FIRM REGISTRATION NO. F-17076

Gorrondona
Engineering Services, Inc.

Geotechnical Engineering • Construction Materials Testing & Inspection

June 15, 2022

Mr. Mike Shelton, PE, AICP
Kimley-Horn and Associates, Inc.
11700 Katy Freeway, Suite 800
Houston, Texas 77079

Re: GEOTECHNICAL ENGINEERING REPORT
West U WWTP Improvements
Houston, Texas
GES Project No. 21-0277

Dear Mr. Shelton:

Gorrondona Engineering Services, Inc. (GES) is pleased to submit this Geotechnical Engineering Report for the referenced project. We appreciate the opportunity of working with you. Please contact us if you have any questions or require additional services.

Respectfully submitted,

Hamed Ardalan, Ph.D., P.E.
Engineering Manager

TABLE OF CONTENTS

Page

1.0 Introduction 1
2.0 Field Investigation 2
3.0 Laboratory Testing 3
4.0 Site Conditions 4
4.1 General 4
4.2 Geology 5
4.3 Soil 6
4.4 Groundwater 7
5.0 Analysis and Recommendations 8
5.1 Seismic Site Classification 8
5.2 Potential Vertical Soil Movements 8
5.3 Construction Excavations 9
5.4 Groundwater Control 9
5.5 Earthwork 10
5.5.1 Site Preparation 10
5.5.2 Proofroll 10
5.5.3 Grading and Drainage 10
5.5.4 Wet Weather/Soft Subgrade 11
5.5.5 Fill 11
5.5.6 Testing 12
5.6 Demolition Considerations 13
5.7 Loading on Buried Structures 13
5.8 Retaining Structures 14
5.9 Buried Pipe 15
5.10 Existing Fill 16
5.11 Foundation System 16
5.11.1 Slab Foundation 17
5.11.2 Mat Foundation 17
5.11.3 Straight Shaft Drilled Piers 18
5.11.4 Underreamed Drilled Piers 20
5.12 Caissons 23
5.13 Slab-on-Grade 24
5.14 Structural Slab 25
5.15 Pavement 25
5.15.1 Rigid Pavement 25
5.15.2 Pavement Subgrade 26
6.0 General Comments 27

APPENDICES

Appendix A - Project Location Diagrams
Appendix B - Boring Location Diagram
Appendix C - Boring Logs and Laboratory Results
Appendix D - Aerial Photographs
Appendix E - USGS Topographic Map
Appendix F - Site Photographs
Appendix G - Geologic Information
Appendix H - Unified Soil Classification System

GEOTECHNICAL ENGINEERING REPORT

West U WWTP Improvements
Houston, Texas

1.0 INTRODUCTION

Project Location. The project is located on the south side of N. Braeswood Blvd, approximately 0.1 miles southwest of its intersection with Kirby Drive, in Houston, Texas. The general location and orientation of the site are provided in Appendix A - Project Location Diagrams.

Project Description. The project consists of two elevated office buildings, a lift station (24-feet deep), onsite underground utilities, additions to existing WWTP (addition consists of an elevated blower pad and headworks structure), and parking and drive areas.

Project Authorization. This geotechnical investigation was authorized by Mr. Aaron K. Rader with Kimley-Horn and Associates, Inc. and performed in accordance with GES Proposal No. P21-0208 dated March 15, 2021.

Purpose and Methodology. The principal purposes of this investigation were to evaluate the general soil conditions at the proposed site and to develop geotechnical engineering design recommendations. To accomplish its intended purposes, the study was conducted in the following phases:

1. Drill sample borings to evaluate the soil conditions at the boring locations and to obtain soil samples;
2. Conduct laboratory tests on selected samples recovered from the borings to establish the pertinent engineering characteristics of the soils; and
3. Perform engineering analyses, using field and laboratory data, to develop design criteria.

Required Review. Detailed design plans were not available at the time of preparation of this report. Recommendations in our report are contingent upon GES reviewing and approving in writing the following design items prior to construction:

- Site grading plan, and
- Foundation plan, details, and related structural loads.

Cautionary Statement Regarding Use of this Report. As with any geotechnical engineering report, this report presents technical information and provides detailed technical recommendations for civil and structural engineering design and construction purposes. GES, by necessity, has assumed the user of this document possesses the technical acumen to

understand and properly utilize information and recommendations provided herein. GES strives to be clear in its presentation and, like the user, does not want potentially detrimental misinterpretation or misunderstanding of this report. Therefore, we encourage any user of this report with questions regarding its content to contact GES for clarification. Clarification will be provided verbally and/or issued by GES in the form of a report addendum, as appropriate.

Report Specificity. This report was prepared to meet the specific needs of the client for the specific project identified. Recommendations contained herein should not be applied to any other project at this site by the client or anyone else without the explicit approval of GES.

2.0 FIELD INVESTIGATION

Subsurface Investigation. The subsurface investigation for this project is summarized in the following table. Boring locations are provided in Appendix B - Boring Location Diagram.

Boring Nos.	Depth, feet bgs [1]	Date Drilled	Location[2]
B-01 to B-04, and B-06	25 - 35 [3]	6/8/2021	Spaced Across the Site
B-05	25	6/8/2021	Near Proposed Lift Station and Addition Area to Existing WWTP

Notes:

1. bgs = below ground surface
2. Boring locations provided in Appendix B - Boring Location Diagram were not surveyed and should be considered approximate. Borings were located by recreational hand-held GPS unit. Horizontal accuracy of such units is typically on the order of 20-feet.
3. ***Boring B-04 was originally drilled at location shown in red in Appendix B - Boring Location Diagram but terminated at 6-feet due to obstruction encountered. This boring was offset from its original location but again terminated at 8-feet due to obstruction encountered.***

Boring Logs. Subsurface conditions were defined using the sample borings. Boring logs generated during this study are included in Appendix C - Boring Logs and Laboratory Results. Borings were advanced between sample intervals using continuous flight auger drilling procedures.

Cohesive Soil Sampling. Cohesive soil samples were generally obtained using Shelby tube samplers in general accordance with American Society for Testing and Materials (ASTM) D1587. The Shelby tube sampler consists of a thin-walled steel tube with a sharp cutting edge connected to a head equipped with a ball valve threaded for rod connection. The tube is pushed into the undisturbed soils by the hydraulic pulldown of the drilling rig. The soil specimens were extruded from the tube in the field, logged, tested for consistency using a hand penetrometer, sealed and packaged to maintain "in situ" moisture content.

Consistency of Cohesive Soils. The consistency of cohesive soil samples was evaluated in the field using a calibrated hand penetrometer. In this test a 0.25-inch diameter piston is pushed into the undisturbed sample at a constant rate to a depth of 0.25-inch. The results of these tests are tabulated at the respective sample depths on the boring logs. When the capacity of the penetrometer is exceeded, the value is tabulated as 4.5+.

Granular Soil Sampling. Granular soil samples were generally obtained using split-barrel sampling procedures in general accordance with ASTM D1586. In the split-barrel procedure, a disturbed sample is obtained in a standard 2-inch outside diameter (OD) split barrel sampling spoon driven 18-inches into the ground using a 140-pound (lb) hammer falling freely 30 inches. The number of blows for the last 12-inches of a standard 18-inch penetration is recorded as the Standard Penetration Test resistance (N-value). The N-values are recorded on the boring logs at the depth of sampling. Samples were sealed and returned to our laboratory for further examination and testing.

Groundwater Observations. Groundwater observations are shown on the boring logs.

Borehole Plugging. Upon completion of the borings, the boreholes were backfilled from the top and plugged at the surface.

3.0 LABORATORY TESTING

GES performs visual classification and any of a number of laboratory tests, as appropriate, to define pertinent engineering characteristics of the soils encountered. Tests are performed in general accordance with ASTM or other standards and the results included at the respective sample depths on the boring logs or separately tabulated, as appropriate, and included in Appendix C - Boring Logs and Laboratory Results. Laboratory tests and procedures routinely utilized, as appropriate, for geotechnical investigations are tabulated in the following table.

Test Procedure	Description
ASTM D7928	Standard Test Method for Particle-Size Distribution (Gradation) of Fine-Grained Soils Using the Sedimentation (Hydrometer) Analysis
ASTM D698	Standard Test Methods for Laboratory Compaction Characteristics of Soil Using Standard Effort
ASTM D1140	Standard Test Methods for Amount of Material in Soils Finer than the No. 200 (75-µm) Sieve
ASTM D1557	Standard Test Methods for Laboratory Compaction Characteristics of Soil Using Modified Effort
ASTM D1883	Standard Test Method for CBR (California Bearing Ratio) of Laboratory-Compacted Soils
ASTM D2166	Standard Test Method for Unconfined Compressive Strength of Cohesive Soil
ASTM D2216	Standard Test Method for Laboratory Determination of Water (Moisture) Content of Soil and Rock by Mass
ASTM D2217	Standard Practice for Wet Preparation of Soil Samples for Particle-Size Analysis and Determination of Soil Constants

Test Procedure	Description
ASTM D2434	Standard Test Method for Permeability of Granular Soils (Constant Head)
ASTM D2435	Standard Test Methods for One-Dimensional Consolidation Properties of Soils Using Incremental Loading
ASTM D2487	Standard Classification of Soils for Engineering Purposes (Unified Soil Classification System)
ASTM D2488	Standard Practice for Description and Identification of Soils (Visual-Manual Procedure)
ASTM D2850	Standard Test Method for Unconsolidated-Undrained Triaxial Compression Test on Cohesive Soil
ASTM D2937	Standard Test Method for Density of Soil in Place by the Drive-Cylinder Method
ASTM D4220	Standard Practices for Preserving and Transporting Soil Samples
ASTM D4318	Standard Test Methods for Liquid Limit, Plastic Limit and Plasticity Index of Soils
ASTM D4546	Standard Test Methods for One-Dimensional Swell or Settlement Potential of Cohesive Soils
ASTM D4643	Standard Test Method for Determination of Water (Moisture) Content of Soil by the Microwave Oven Method
ASTM D4644	Standard Test Method for Slake Durability of Shales and Similar Weak Rocks
ASTM D4647	Standard Test Method for Identification and Classification of Dispersive Clay Soils by the Pinhole Test
ASTM D4718	Standard Practice for Correction of Unit Weight and Water Content for Soils Containing Oversize Particles
ASTM D4767	Standard Method for Consolidated Undrained Triaxial Compression Test for Cohesive Soils
ASTM D4972	Standard Test method for pH of Soils
Manufacturer's Instructions	Soil Strength Determination Using a Torvane
Tex-145-E	Determining Sulfate Content in Soils - Colorimetric Method

4.0 SITE CONDITIONS

4.1 General

Review of Aerial Photographs. Historical aerial photographs of the site were reviewed for potential past alterations to the site which could impact geotechnical design conditions. Specifically, aerial photographs were reviewed to visually assess obvious areas of significant past fill on site. Aerial photographs reviewed for this study are identified in the following table and are included in Appendix D - Aerial Photographs.

Aerial Photographs Reviewed	
Year	Observations Since Prior Aerial Photograph
1978	A wastewater treatment plant with associated structures and paving area were noted at the site.
1995	Noted wastewater treatment plant with associated structures were removed and a new wastewater treatment plant with associated structures and buildings were noted at east of the removed plant. Site was further developed with associated paving area.
2002	Earthwork activities were noted at west of the site. Some unknowns were also noted at west of the site.

Aerial Photographs Reviewed	
Year	Observations Since Prior Aerial Photograph
2006	Additional unknowns were noted at west of the site.
2008	Additional buildings were noted at northwest of the site and a tank type structure was noted at southwest of the site.
2010	Additional earthwork and grading activities were noted at west portion of the site.
2014	No visible changes were noted.
2017	Additional unknowns were noted at west of the site.
2020	No visible changes were noted.

Site Fills. Due to previous construction and earthwork activities, we would expect surficial disturbance of site soils. ***Our review revealed areas of potential fill on-site. Existing fill recommendations are provided in Section 5.10.***

Potential Existing Foundations. Demolition considerations for the existing foundations are provided in Section 5.6.

Limitations. Due to the intermittent nature and relatively low resolution of aerial photographs, as well as our lack of detailed information regarding the past land use of the site, our review should not be interpreted as eliminating the possibility of cuts and/or fills on site which could detrimentally affect future construction.

Topography. A United States Geological Survey (USGS) topographic map of the site is provided in Appendix E - USGS Topographic Map. The map indicates the site is relatively flat.

Site Photographs. Representative photographs of the site at the time of this investigation are provided in "Appendix F - Site Photographs". Photographed conditions are consistent with the aerial photographs and topographic map.

4.2 Geology

Geologic Formation. Based on available surface geology maps and our experience, it appears this site is located in the Beaumont Formation, areas predominantly clay. A geologic atlas and USGS formation description are provided in "Appendix G - Geologic Information". Soils within the Beaumont Formation, areas predominantly clay can generally be characterized as clay, silt and sand.

Geologic Faults. A review of the attached geologic map indicates the nearest geologic fault is about 3.2-miles southeast of the project site. A geologic fault study was beyond the scope of this investigation.

4.3 Soil

Stratigraphy. Descriptions of the various strata and their approximate depths and thickness per the Unified Soil Classification System (USCS) are provided on the boring logs included in "Appendix C - Boring Logs and Laboratory Results". Terms and symbols used in the USCS are presented in "Appendix H - Unified Soil Classification System". A brief summary of the stratigraphy indicated by the borings is provided in the following table.

Generalized Subsurface Conditions at Boring Locations Spaced Across the Site (Borings B-01 to B-04, and B-06)			
Nominal Depth, feet bgs (Except as Noted)		General Description	Detailed Description of Soils/Materials Encountered
Top of Layer	Bottom of Layer		
0	0 to 7.3-inches	PAVEMENT	7.3-Inch CONCRETE in Boring B-01 and 5.5-Inch CONCRETE in Boring B-06 only.
0 to 7.3-inches	4 to 8	FILL	Firm to hard stiff SANDY LEAN CLAY (CL) / SANDY FAT CLAY (CH) / LEAN CLAY WITH SAND (CL) / FAT CLAY WITH SAND (CH) FILL and SILTY SAND (SM) FILL. ***Note**: **Boring B-04 was terminated at 8-feet due to obstruction encountered.***
4 to 8	10 to 25	FAT CLAY and LEAN CLAY	Soft to very stiff FAT CLAY WITH SAND (CH) / FAT CLAY (CH), stiff to hard SANDY LEAN CLAY (CL).
10 to 25	35	SAND	Medium dense to dense SILTY SAND (SM) and firm to stiff CLAYEY SAND (SC).
Note: Boring Termination Depth = 25 to 35 feet bgs.			

Generalized Subsurface Conditions near Proposed Lift Station and Addition Area to Existing WWTP (Boring B-05)			
Nominal Depth, feet bgs (Except as Noted)		General Description	Detailed Description of Soils/Materials Encountered
Top of Layer	Bottom of Layer		
0	3-Inch	PAVEMENT	3-Inch BASE.
3-Inch	8	FILL	CLAYEY SAND (SC) FILL.
8	15	FAT CLAY	Stiff to very stiff FAT CLAY WITH SAND (CH) / FAT CLAY (CH).
15	25	SAND	SILTY SAND (SM) and soft CLAYEY SAND (SC).
Note: Boring Termination Depth = 25 feet bgs.			

Moisture Change Susceptibility of Near Surface Soils. The sandier soils encountered at and near the ground surface at this site are very susceptible to changes in moisture. The presence of surface water due to precipitation or groundwater may result in a decrease in the ability to compact and work with the soil. It is common for these soils to pump when subjected to high levels of moisture. In addition, these soils located at and near the ground surface will allow surface water to infiltrate until the water becomes perched on a less

permeable layer at depth. Soils of this type are especially prone to requiring the implementation of wet weather/soft subgrade recommendations provided in this report.

Swell Potential based on Atterberg Limits. Atterberg (plastic and liquid) limits were performed on 9 shallow soil samples obtained at depths between 0- and 8-feet bgs. The plasticity index of the samples was between 19 and 67 with an average of 42 indicating that the soils have a moderate to very high potential for shrinking and swelling with changes in soil moisture content.

Swell Tests. Swell tests were performed on selected clay soil samples. Swell test details are provided in "Appendix C - Boring Logs and Laboratory Results". The results of the tests are summarized in the following table.

Boring No.	Avg. Depth (ft.)	Moisture Content, w, %	Liquid Limit, LL	Plasticity Index, PI	Applied Overburden Stress (psi)	Swell (%)
B-01	3	23	35	22	2.6	0.00
B-02	5	18	42	28	4.7	0.59
B-03	3	31	68	52	2.6	0.76
B-06	3	21	32	19	2.6	0.44
B-06	7	31	85	67	6.7	0.00

4.4 Groundwater

Groundwater Levels. The borings were advanced using auger drilling and intermittent sampling methods in order to observe groundwater seepage levels. Groundwater levels encountered in the borings during this investigation are identified in the following table.

Boring No.	Depth Groundwater Initially Encountered (feet, bgs)	Groundwater Depth after 15 Minutes (feet, bgs)
B-03	31.0	31.0
All other borings	Not Encountered	Not Encountered

Long-term Groundwater Monitoring. Long-term monitoring of groundwater conditions via piezometers was not performed during this investigation and was beyond the scope of this study. Long-term monitoring can reveal groundwater levels materially different than those encountered during measurements taken while drilling the borings.

Groundwater Fluctuations. Future construction activities may alter the surface and subsurface drainage characteristics of this site. It is difficult to accurately predict the magnitude of subsurface water fluctuations that might occur based upon short-term observations. The groundwater level should be expected to fluctuate throughout the years with variations in precipitation.

5.0 ANALYSIS AND RECOMMENDATIONS

5.1 Seismic Site Classification

The seismic site classification is based on the 2015 International Building Code (IBC) and is a classification of the site based on the type of soils encountered at the site and their engineering properties. Per Table 20.3-1 of ASCE 7-10, the seismic site classification for this site is D.

5.2 Potential Vertical Soil Movements

TxDOT Method Tex-124-E. Potential Vertical Rise (PVR) calculations were performed in general accordance with the Texas Department of Transportation (TxDOT) Method Tex-124-E. The Tex-124-E method is empirical and is based on the Atterberg limits and moisture content of the subsurface soils. The calculated PVR is an empirical estimate of a soil's potential for swell based upon the soil's plasticity index, applied loading (due to structures or overburden), and antecedent moisture condition. The wetter a soil's antecedent moisture condition, the lower its calculated PVR will be for a given plasticity index and load. However, soil with a higher antecedent moisture content will be more susceptible to shrinkage due to drying. Maintaining a consistent moisture content in the soil is the key to minimizing both heave and shrinkage related structural problems.

Calculated PVR using TxDOT Method Tex-124-E. The PVR calculated using TxDOT Method Tex-124-E is about 1.5 to 2.5-inches assuming an average antecedent moisture condition. The calculated PVR is consistent with soil moisture conditions at the time this investigation was conducted.

Calculated PVR using Swell Test Results. The PVR based on the swell test results is about 1-inch. The PVR based on swell test results is dependent on the moisture conditions at the time of testing.

Soil Moisture Confirmation Prior to Construction. The calculated PVR can vary considerably with prolonged wet or dry periods. We recommend the moisture content for the upper 10 feet of soils within the building pad be assessed for consistency with this report prior to construction if: (1) an extended period of time has elapsed between the performance of this investigation and construction of the foundation, or (2) unusually wet or dry weather is experienced between the performance of this investigation and construction of the foundation.

5.3 Construction Excavations

Applicability. Recommendations in this section apply to short-term construction-related excavations for this project.

Sloped Excavations. All sloped short-term construction excavations on-site should be designed in accordance with Occupational Safety and Health Administration (OSHA) excavation standards. Borings from this investigation indicated that the soils may be classified per OSHA regulations as Type C from the ground surface to a depth of 10-feet bgs. Short-term construction excavations may be constructed with a maximum slope of 1.5:1, horizontal to vertical (H:V), to a depth of 10-feet bgs. If excavations are to be deeper than 10-feet, we should be contacted to evaluate the excavation. Recommendations provided herein are not valid for any long-term or permanent slopes on-site.

Shored Excavations. As an alternative to sloped excavations, vertical short-term construction excavations may be used in conjunction with trench boxes or other shoring systems. Shoring systems should be designed using an equivalent fluid weight of 85 pounds per cubic foot (pcf) above the groundwater table and 105 pcf below the groundwater table. Surcharge pressures at the ground surface due to dead and live loads should be added to the lateral earth pressures where they may occur. Lateral surcharge pressures should be assumed to act as a uniform pressure along the upper 10-feet of the excavation based on a lateral earth coefficient of 0.5. Surcharge loads set back behind the excavation at a horizontal distance equal to or greater than the excavation depth may be ignored. We recommend that no more than 200-feet of unshored excavation should be open at any one time to prevent the possibility of failure and excessive ground movement to occur. We also recommend that unshored excavations do not remain open for a period of time longer than 24-hours.

Limitations. Recommendations provided herein assume there are no nearby structures or other improvements which might be detrimentally affected by the construction excavation. Before proceeding, we should be contacted to evaluate construction excavations with the potential to affect nearby structures or other improvements.

Excavation Monitoring. Excavations should be monitored to confirm site soil conditions consistent with those encountered in the borings drilled as part of this study. Discrepancies in soil conditions should be brought to the attention of GES for review and revision of recommendations, as appropriate.

5.4 Groundwater Control

Groundwater was encountered at depths as shallow as 31.0-feet bgs during the subsurface investigation. If groundwater is encountered during excavation, dewatering to bring the

groundwater below the bottom of excavations may be required. Dewatering could consist of standard sump pits and pumping procedures, which may be adequate to control seepage on a local basis during excavation. Supplemental dewatering will be required in areas where standard sump pits and pumping is not effective. Supplemental dewatering could include submersible pumps in slotted casings, well points, or eductors. The contractor should submit a groundwater control plan, prepared by a licensed engineer experienced in that type of work.

5.5 Earthwork

5.5.1 Site Preparation

In the area of improvements, all concrete, trees, stumps, brush, debris, septic tanks, abandoned structures, roots, vegetation, rubbish and any other undesirable matter should be removed and properly disposed. All vegetation should be removed and the exposed surface should be scarified to an additional depth of at least 6 inches. It is the intent of these recommendations to provide a loose surface with no features that would tend to prevent uniform compaction by the equipment to be used.

5.5.2 Proofroll

Structural pad and paving subgrades should be proofrolled with a fully loaded tandem axle dump truck or similar pneumatic-tire equipment to locate areas of loose subgrade. In areas to be cut, the proofroll should be performed after the final grade is established. In areas to be filled, the proofroll should be performed prior to fill placement. Areas of loose or soft subgrade encountered in the proofroll should be removed and replaced with engineered fill, moisture conditioned (dried or wetted, as needed) and compacted in place.

5.5.3 Grading and Drainage

Every attempt should be made to limit the extreme wetting or drying of the subsurface soils because swelling and shrinkage of these soils will result. Standard construction practices of providing good surface water drainage should be used. A positive slope of the ground away from any foundation should be provided. Ditches or swales should be provided to carry the run-off water both during and after construction. Stormwater runoff should be collected by gutters and downspouts and should discharge away from the buildings.

Root systems from trees and shrubs can draw a substantial amount of water from the clay soils at this site, causing the clays to dry and shrink. This could cause settlement beneath grade-supported slabs such as floors, walks and paving. Trees and large bushes should be located a distance equal to at least one-half their anticipated mature height away from grade slabs.

Lawn areas should be watered moderately, without allowing the clay soils to become too dry or too wet.

5.5.4 Wet Weather/Soft Subgrade

Soft and/or wet surface soils may be encountered during construction, especially following periods of wet weather. Wet or soft surface soils can present difficulties for compaction and other construction equipment. If specified compaction cannot be achieved due to soft or wet surface soils, one of the following corrective measures will be required:

1. Removal of the wet and/or soft soil and replacement with select fill,
2. Chemical treatment of the wet and/or soft soil to improve the subgrade stability, or
3. If allowed by the schedule, drying by natural means.

Chemical treatment is usually the most effective way to improve soft and/or wet surface soils. GES should be contacted for additional recommendations if chemical treatment is planned due to wet and/or soft soils.

5.5.5 Fill

Select Fill. Any fill placed in building pad areas should consist of select fill. Select fill should consist of soil with a liquid limit less than 35 and a Plasticity Index between 7 and 20. The select fill should be placed in loose lifts not exceeding 8-inches and should be compacted to at least 95 percent maximum dry density (per ASTM D-698) and at a moisture content between optimum and 4 percent above optimum moisture content. The subgrade to receive select fill should be scarified to a depth of 6 inches and compacted to 92 to 96 percent of the material's maximum standard Proctor dry density (ASTM D-698) at a workable moisture level at least 4 percentage points above optimum and placed in loose lifts not exceeding 9 inches.

Lime-treated Native Clay Soil. Based on the laboratory testing conducted for this investigation, the native clay on-site soils will not meet specifications for select fill outlined in the section titled "Fill". As an alternative to importing select fill, the native clay soil may be blended with lime to reduce the plasticity index to meet select fill requirements. Based on our experience, we expect that it will require between 4- and 6-percent lime (by dry unit weight) to reduce the plasticity index of the native clay soils to select fill requirements. Prior to selecting this alternative, lime series tests should be performed to assess the amount of lime required.

General Fill. General fill may be placed in improved areas outside of building pad areas. General fill should consist of material approved by the Geotechnical Engineer with a liquid limit less than 50. General fill should be placed in loose lifts not exceeding 8-inches and

should be uniformly compacted to a minimum of 95 percent maximum dry density (per ASTM D-698) and within ±2 percent of the optimum moisture content.

Fill Restrictions. Select fill and general fill should consist of those materials meeting the requirements stated. Select fill and general fill should not contain material greater than 4-inches in any direction, debris, vegetation, waste material, environmentally contaminated material, or any other unsuitable material.

Unsuitable Materials. Materials considered unsuitable for use as select fill or general fill include low and high plasticity silt (ML and MH), silty clay (CL-ML), organic clay and silt (OH and OL) and highly organic soils such as peat (Pt). These soils may be used for site grading and restoration in unimproved areas as approved by the Geotechnical Engineer. Soil placed in unimproved areas should be placed in loose lifts not exceeding 10-inches and should be compacted to at least 92 percent maximum dry density (per ASTM D-698) and at a moisture content within ±4 percentage points of optimum.

Cautionary Note. It is extremely important that select fill placed within building pads be properly characterized using one or more representative proctor samples. The use of a proctor sample which does not adequately represent the select fill being placed can lead to erroneous compaction (moisture and density) results which can significantly increase the potential for swelling of the select fill. The plasticity index of select fill soils placed during construction should be checked every day to confirm conformance to the project specifications and consistency with the proctor being utilized.

5.5.6 Testing

Required Testing and Inspections. Field compaction and classification tests should be performed by GES. Compaction tests should be performed in each lift of the compacted material. We recommend the following minimum soil compaction testing be performed: one test per lift per 2,500 square feet (SF) in the area of the building pad, one test per lift per 5,000 SF outside the building pad, and one test per lift per 100 linear feet of utility backfill. If the materials fail to meet the density or moisture content specified, the course should be reworked as necessary to obtain the specified compaction. Classification confirmation inspection/testing should be performed daily on select fill materials (whether on-site or imported) to confirm consistency with the specifications.

Liability Limitations. Since proper field inspection and testing are critical to the design recommendations provided herein, GES cannot assume responsibility or liability for recommendations provided in this report if construction inspection and/or testing is performed by another party.

5.6 Demolition Considerations

Applicability. Recommendations in this section apply to the removal of any existing foundations, utilities or pavement which may be present on this site.

General. Special care should be taken in the demolition and removal of existing floor slabs, foundations, utilities and pavements to minimize disturbance of the subgrade. Excessive disturbance of the subgrade resulting from demolition activities can have serious detrimental effects on planned foundation and paving elements.

Existing Foundations. Existing foundations are typically slabs, shallow footings, or drilled piers. If slab or shallow footings are encountered, they should be completely removed. If drilled piers are encountered, they should be cut off at an elevation at least 24-inches below proposed grade beams or the final subgrade elevation, whichever is deeper. The remainder of the drilled pier should remain in place. Foundation elements to remain in place should be surveyed and superimposed on the proposed development plans to determine the potential for obstructions to the planned construction. GES should be contacted if drilled piers are to be excavated and removed completely. Additional earthwork activities will be required to make the site suitable for new construction if the piers are to be removed completely.

Existing Utilities. Existing utilities and bedding to be abandoned should be completely removed. Existing utilities and bedding may be abandoned in place if they do not interfere with planned development. Utilities which are abandoned in place should be properly pressure-grouted to completely fill the utility.

Backfill. Excavations resulting from the excavation of existing foundations and utilities should be backfilled in accordance with Section 5.5.5 - Fill.

Other Buried Structures. Other types of buried structures (wells, cisterns, etc.) could be located on the site. If encountered, GES should be contacted to address these types of structures on a case-by-case basis.

5.7 Loading on Buried Structures

Uplift. Buried water-tight structures are subjected to uplift forces caused by differential water levels adjacent to and within the structure. Soils with any appreciable silt or sand content will likely become saturated during periods of heavy rainfall and the effective static water level will be at the ground surface. For design purposes, we recommend the groundwater level be assumed at the ground surface. Resistance to uplift pressure is provided by soil skin friction and the dead weight of the structure. Skin friction should be neglected for the upper 3 feet of soil. A skin friction of 200 pounds per square foot (psf) may be used below a depth of 3 feet.

Lateral Pressure. Lateral pressures on buried structures due to soil loading can be determined using an equivalent fluid weight of 105 pounds per cubic foot (pcf). This includes hydrostatic pressure but does not include surcharge loads. The lateral load produced by a surcharge may be computed as 50 percent of the vertical surcharge pressure applied as a constant pressure over the full depth of the buried structure. Surcharge loads located a horizontal distance equal to or greater than the buried structure depth may be ignored.

Vertical Pressure. Vertical pressures on buried structures due to soil loading can be determined using an equivalent fluid weight of 125 pcf. This does not include surcharge loads. The vertical load produced by a surcharge may be computed as 100 percent of the vertical surcharge pressure applied as a constant pressure over the full width of the buried structure.

5.8 Retaining Structures

Applicability. GES was not notified of any specific retaining structures in conjunction with this project. Recommendations provided in this section are applicable to structures 5-feet or less in height. Retaining structures in excess of 5-feet should be brought to the attention of GES for a more detailed assessment. *It is imperative that global stability be reviewed by GES on any retaining structure in excess of 5-feet in height.*

Lateral Pressure. Lateral pressures on retaining structures due to soil loading can be determined using an equivalent fluid weight of 85 pcf if fill behind the wall is free-draining and above the groundwater table and 105 pcf if fill behind the wall is not free draining or is below the groundwater table. This does not include surcharge loads. This also assumes a horizontal ground surface behind the structure. The lateral load produced by a surcharge may be computed as 50 percent of the vertical surcharge pressure applied as a constant pressure over the full depth of the buried structure. Surcharge loads set back behind the retaining structure at a horizontal distance equal to or greater than the structure height may be ignored.

Lateral Resistance. Resistance to lateral loads may be provided by the soil adjacent to the structure. We recommend using an equivalent fluid weight of 100 pcf for lateral resistance (using a Factor of Safety of 3). An allowable coefficient of sliding friction of 0.2 (using a Factor of Safety of 2) between the retaining structure concrete footings and underlying soil may be combined with the passive lateral resistance.

Bearing Capacity. Assuming a minimum embedment depth of 24-inches, an allowable bearing capacity of 2,000 psf may be used for retaining structure footings (using a Factor of Safety of 3).

5.9 Buried Pipe

Applicability. Recommendations in this section are applicable to the design of buried piping placed by open cut methods associated with this project.

Pressure on Buried Pipe. Design recommendations provided in the "Loading on Buried Structures" section of this report apply to buried piping.

Thrust Restraints. Resistance to lateral forces at thrust blocks will be developed by friction developed along the base of the thrust block and passive earth pressure acting on the vertical face of the block. We recommend a coefficient of base friction of 0.2 (using a Factor of Safety of 2) along the base of the thrust block. Passive resistance on the vertical face of the thrust block may be calculated using the allowable passive earth pressures presented in the following table.

Allowable Passive Earth Pressure by Material Type	
Material	Allowable Passive Pressure (psf)
Sand	100 x Depth in Feet
Native Clay and Clayey Sand	2,000
Compacted Clay Fill	1,500
Note: Passive resistance should be neglected for any portion of the thrust block within 3 feet of the final site grade. The allowable passive resistance for native clays and clayey sand is based on the thrust block bearing directly against vertical, undisturbed cuts in these materials.	

Bedding and Backfill. Pipe bedding and pipe-zone backfill for the water and sanitary sewer piping should be in accordance with TxDOT standard specification Item 400 or the local equivalent. The pipe-zone consists of all materials surrounding the pipe in the trench from six (6) inches below the pipe to 12 inches above the pipe.

Trench Backfill. Excavated site soils will be utilized to backfill the trenches above the pipe-zone. Backfilled soil should be placed in loose lifts not exceeding 8-inches and should be compacted to at least 95 percent maximum dry density (per ASTM D-698) and at a moisture content between optimum and 4 percent above optimum moisture content.

Trench Settlement. Settlement of backfill should be anticipated. Even for properly compacted backfill, fills in excess of 8 to 10 feet are still subject to settlements over time of about 1 to 2 percent of the total fill thickness. This level of settlement can be significant for fills beneath streets. Therefore, close coordination and monitoring should be performed to reduce the potential for future movement.

5.10 Existing Fill

Existing fill was encountered in all of the borings during the subsurface investigation. The existing fill extended to depths of up to 4- to 8-feet at boring locations. For the purpose of this report, we assumed the existing fill was placed under engineered supervision. **If there are no records indicating that the fill was placed and compacted in a controlled manner (engineered fill) and the existing fill will support structural loads, it will be necessary to confirm appropriate compaction or excavate all the existing fill in the building/structure pad area and recompact it in accordance with select fill placement requirements prior to construction of the building/structure pad**.

5.11 Foundation System

Appropriate Foundation Types. Based on provided information by the client, we understand that the proposed office buildings, blower pad and Headwork structures will be elevated from the ground. The following foundation types are appropriate to the site based on the geotechnical conditions encountered:

- For elevated office buildings – Straight shaft drilled piers or underreamed drilled piers.
- For elevated blower pad and headworks structure – Straight shaft drilled piers or underreamed drilled piers.
- For the lightly loaded at grade structures (e.g., pump house) – Slab foundation, and
- For lift station wet well slab – Mat foundation.

Foundation Determination. We have assumed that structural loads will be typical for the type and size of building proposed. Recommendations for the foundation types are presented below. Final determination of the foundation type to be utilized for this project should be made by the Structural Engineer based on loading, economic factors and risk tolerance.

Foundations Adjacent to Slopes. Foundations placed too close to adjacent slopes steeper than 5H:1V may experience reduced bearing capacities and/or excessive settlement. Recommendations provided herein assume foundations are not close enough to adjacent slopes in excess of 5H:1V to be detrimentally affected. Therefore, foundations closer than 5 times the depth of adjacent slopes, pits, or excavations in excess of 5H:1V should be brought to our attention in order that we may review the appropriateness of our recommendations.

Assumed Maximum Cut/Fill Depth. We have also assumed that cut/fill of less than 1-foot will be required to bring the site to grade. In the event cut/fill in the building pad exceed 1-foot, we should be notified and allowed to review the design to assess the suitability of the

foundation recommendations provided. ***GES must be allowed to review the finalized grading plan to assess the appropriateness of our recommendations.***

Foundation Plans Review. Our office should be contacted to review the foundation plans, details and related structural loads, prior to finalizing the design to check conformance with the recommendations presented herein.

5.11.1 Slab Foundation

General. The lightly loaded at-grade structures (e.g. pump house) can be supported on a reinforced ground-supported slab foundation. The slab foundation should be conventionally reinforced. The slab foundation should be designed with exterior and interior grade beams adequate to provide sufficient rigidity to the foundation system to sustain the vertical soil movements expected at this site as described above. All grade beams and floor slabs should be adequately reinforced with steel to minimize cracking as normal movements occur in the foundation soils.

Bearing Capacity. The slab should be designed using a net dead load plus sustained live load bearing pressure of 1,500 psf or a net total load pressure of 2,250 psf, whichever condition results in a larger bearing surface. These bearing pressures are based on a safety factor of 3 and 2, respectively, against shear failure of the foundation bearing soils.

Foundation Depth. Grade beams should be founded a minimum of 18 inches below surrounding grade (supported on native soils or select fill, depending on the subgrade treatment implemented). The bottom of the beam trenches should be free of any loose or soft material prior to the placement of the concrete.

Deflection Analysis. Slab deflections should be analyzed per recommendations provided in Section 5.13 - Slab-on-Grade.

5.11.2 Mat Foundation

Applicability. The recommendations provided in this section are applicable to the proposed lift station wet well slab. We understand the wet well slab for the proposed lift station will be at a depth of about 24-feet bgs.

Bearing Capacity. The mat foundation for the proposed lift station wet well may be designed based on an allowable bearing capacity of 4,000 psf (using a Factor of Safety of 3).

Settlement. Although a detailed settlement analysis is beyond the scope of this study, settlement for foundations constructed as described above should be about 1 inch or less.

Foundation Construction. The geotechnical engineer should monitor foundation construction to verify conditions are as anticipated and that the materials encountered are

suitable for support of foundations. Soft or unsuitable soils encountered at the foundation bearing level should be removed to expose suitable, firm soil. Foundation excavation should be dry and free of loose material.

Deflection Analysis. Coefficient of subgrade reaction, k, values are soil, load and settlement dependent. Upon request by the Structural Engineer for this project, k value recommendations will be provided for the specific loading application in question.

5.11.3 Straight Shaft Drilled Piers

Applicability. Straight shaft drilled pier foundations as described in this section may be used for support of the proposed elevated buildings, blowers pad and headworks structure. We recommend that straight shaft drilled pier should be founded in native soil at a minimum depth of 15-feet beneath the existing grade.

Axial Resistance. For design of the straight shaft drilled pier foundations, we recommend the following geotechnical parameters:

Straight Shaft Drilled Piers				
Depth (feet)[1]	Soil Type	Effective Soil Unit Weight (pcf) [2]	Allowable Skin Friction (psf) [3]	Allowable End Bearing Capacity (psf) [4, 5]
0 - 8	CLAY SOILS	125	0	0
8 - 15	CLAY SOILS	125	600	3,500
15 - 30	SANDY SOILS	110	300	4,500

(1) Depth below existing ground surface.
(2) Effective soil unit weight based on assumed groundwater depth of 30-feet bgs.
(3) Allowable Skin Friction based on a factor of safety = 2.
(4) Allowable End Bearing Capacity based on a factor of safety = 3.
(5) Recommendations assume the foundation depth is greater than or equal to 3 times the foundation width.

Axial resistance of straight shaft drilled piers should be ignored up to 3-feet below the top of the piers (bottom of the pier caps).

Lateral Resistance. For resistance of lateral loads on drilled piers, we recommend the following LPILE design parameters.

LPILE Parameters		
Depth (feet bgs) [1]		LPILE Parameters [2]
Top of Layer	Bottom of Layer	
0	2	LPILE Material Type: Clay Effective Soil Unit Weight: 125 pcf Undrained Cohesion: Ignore Strain @ ½ Peak Strength (ε50): Ignore p-y Modulus (k): Ignore
2	15	Soil Type: Stiff Clay Effective Soil Unit Weight: 125 pcf Undrained Cohesion: 1,500 psf Strain @ ½ Peak Strength (ε_{50}): 0.007 p-y Modulus (k): 500 pci (static), 200 pci (cyclic)
15	30	LPILE Material Type: Medium dense to dense Sand Effective Soil Unit Weight: 110 pcf Friction Angle: 32 Degrees p-y Modulus (k): 90 pci

Note:

(1) Depth below existing ground surface.

(2) Effective soil unit weight based on assumed groundwater depth of 30-feet bgs.

Lateral resistance of piers should be ignored up to 2-feet below the top of the piers.

Uplift. The uplift force on the piers due to swelling of the active clays can be approximated by assuming a uniform uplift pressure of 1000 psf acting over the perimeter of the shaft to a depth of 8 feet. The shafts should contain sufficient full length reinforcing steel to resist uplift forces.

Pier Spacing. Piers should have a minimum center-to-center spacing of at least 2.5 pier diameters. The design side shear for axial or uplift loads may be considered to vary linearly from the full value at a spacing of 2.5 times the diameter of the larger shaft to 50 percent of the design value at a spacing of 1 times the diameter of the larger shaft.

Settlement. Foundation settlement for drilled piers constructed as described herein should be less than 1-inch.

Groundwater. Groundwater was encountered at depths as shallow as 31-feet bgs in borings during drilling. However, groundwater may be encountered during pier excavation and the risk of groundwater seepage is increased during or after periods of precipitation.

Submersible pumps may be capable of controlling seepage in the pier excavation to allow for concrete placement.

Applicable TxDOT Standards. Drilled pier foundations should be constructed in accordance with the requirements of TxDOT Item 416 (standard specification for construction of drilled pier foundations). Based on soil and groundwater conditions encountered in our borings, casing or slurry displacement will likely be required during pier installation. The referenced specification includes requirements for construction using casing or the slurry displacement method, as appropriate.

Construction Observation. The construction of all piers should be observed as a means to verify compliance with design assumptions and to verify:

1. the bearing stratum;
2. the removal of all smear zones and cuttings;
3. that groundwater seepage, when encountered, is correctly handled;
4. that the shafts are vertical (within acceptable tolerance); and
5. ensure that the top of the shafts in contact with clay are not enlarged (mushroom shaped).

Concrete Placement. Concrete should be placed immediately after the excavation has been completed. In no event should a pier excavation be allowed to remain open for more than 8 hours. Concrete should have a slump of 5 to 7 inches and should not be allowed to strike the shaft sidewall or steel reinforcement during placement.

5.11.4 Underreamed Drilled Piers

General. Underreamed drilled pier foundations bearing in native soil may be utilized at this site for the proposed elevated buildings, blowers pad and headworks structure.

Foundation Depth. We recommend that underreamed piers should be founded in native soil at a depth of 10-feet beneath the existing grade. If the existing fill extends below 11-feet, underreamed piers should be founded in native soil at least 1-foot below the existing fill.

Bearing Capacity. The piers may be proportioned using a net dead load plus sustained live load bearing pressure of 3,500 psf or a net total load pressure of 5,250 psf, whichever condition results in a larger bearing surface. These bearing pressures are based on a safety factor of 3 and 2, respectively, against shear failure of the foundation bearing soils.

Settlement. Foundation settlement for drilled piers constructed as described above should be less than 1 inch.

Lateral Capacity. Because of the potential for the upper two feet of the soil to shrink and pull away from drilled piers during dry periods, we recommend soil resistance to lateral

loads on drilled piers be ignored in the upper 2-feet of the soil profile. For resistance of lateral loads on drilled piers, we recommend the following LPILE design parameters.

Depth (feet)	Soil Type	Effective Soil Unit Weight (pcf) [1]	Allowable Cohesion, c (psf) [2]	Angle of Internal Friction, Φ (degrees)	Strain at ½ Peak Strength, ε_{50}	Soil Modulus Parameter, k (for lateral loads) (pci)
0 - 2	Clay	120	0	0	NA	NA
2 - 10	Clay	120	700	0	0.007	500

Note:
1. Effective soil unit weight based on assumed groundwater depth greater than 10-feet.
2. Factor of safety 3 is included in the recommended cohesion parameter.

Uplift. The uplift force on the piers due to swelling of the active clays can be approximated by assuming a uniform uplift pressure of 1,000 psf acting over the perimeter of the shaft to a depth of 8 feet. The shafts should contain sufficient full length reinforcing steel to resist uplift forces.

Uplift Resistance. The uplift resistance provided by an underreamed drilled pier is the sum of resistance provided by the shear strength of the soil, the weight of the soil above the bell and the weight of the drilled pier itself. The following equation may be used to calculate the allowable uplift resistance:

$$F_a = R_F c N_u A_u + \frac{W_s}{FS_1} + \frac{W_c}{FS_2}$$

Where:
F_a = allowable uplift resistance, lbs
c = allowable cohesion, psf
N_u = bearing capacity factor = $\frac{3.5 D_b}{B_b} \leq 9$
R_F = reduction factor for closer pier spacings (discussed below)
D_b = depth to base of bell, ft
B_b = diameter of the bell, ft
A_u = projected area of bell, ft^2 = $\frac{\pi(B_b^2 - B_s^2)}{4}$
B_s = diameter of the drilled pier shaft, ft
W_s = weight of soil above bell, lbs
W_c = weight of drilled pier, lbs
FS_1, FS_2 = safety factors

A safety factor of 3 has been applied to the allowable cohesion value and is appropriate for sustained loading conditions. However, the allowable cohesion values may be increased by

50 percent, resulting in a safety factor of 2, for transient loading conditions. We recommend a soil weight safety factor, FS_1, of 1.2 and a drilled pier weight safety factor, FS_2, of 1.1.

Shaft/Diameter Ratio. The piers should be provided with an underream diameter to shaft diameter ratio not less than 2 to 1 and not greater than 3 to 1. Clay soils at this site are slickensided and underream excavations at some locations may experience significant sloughing as a result. This site will be prone to requiring reduced underream to shaft diameter ratio at some locations. In a worst-case scenario, straight-shaft piers (with a straight-shaft diameter equal to the planned underream pier diameter) may be required at isolated locations.

Pier Spacing. For uplift considerations, piers should not be spaced closer than two underream diameters (edge to edge) based on the diameter of the larger underream. Closer pier spacings may result in reduced uplift capacity. We should be contacted to review closer pier spacings on a case-by-case basis.

Reduction Factor (R_F) for Closer Pier Spacings. A reduction in uplift resistance will be required for piers spaced closer than two underream diameters (edge to edge) as discussed above. The reduction factor is dependent on the number of piers in close proximity to the pier in question. The following table shows the recommended Reduction Factor (R_F) values based on number of piers in close proximity to the pier in question:

Numbers of Piers in Close Proximity to a Given Pier	Reduction Factor (R_F)
Piers > 2 Diameters Edge-to-Edge Spacing	1
1	0.6
2	0.4
3	0.2
Greater than or equal to 4	0

There will be no reduction in uplift resistance contribution from the weight of soil above bell and weight of drilled pier. GES should be contacted to review the final foundation plans for review.

Construction Observation. The construction of all piers should be observed as a means to verify compliance with design assumptions and to verify:

1. the bearing stratum;
2. underream size;
3. the removal of all smear zones and cuttings;
4. that groundwater seepage, when encountered, is correctly handled; and
5. that the shafts are vertical (within acceptable tolerance).

Groundwater. Groundwater was encountered at depths as shallow as 31.0-feet bgs during the subsurface investigation. However, groundwater may be encountered during pier excavation and the risk of groundwater seepage is increased during or after periods of

precipitation. Submersible pumps may be capable of controlling seepage in the pier excavation to allow for concrete placement.

Applicable TxDOT Standards. Drilled pier foundations should be constructed in accordance with the requirements of TxDOT Item 416 (standard specification for construction of drilled pier foundations). This specification includes requirements for construction using casing or the slurry displacement method, as appropriate. We should be contacted for further evaluation and recommendations if soils other than those anticipated to be encountered at the design foundation bearing level, or if groundwater seepage and/or underream collapse occurs.

Concrete Placement. Concrete should be placed in the shafts immediately after excavation to reduce the risk of significant groundwater seepage, deterioration of the foundation-bearing surface and underream collapse. In no event should a pier excavation be allowed to remain open for more than 8 hours. Concrete should have a slump of 5 to 7 inches and should not be allowed to strike the shaft sidewall or steel reinforcement during placement.

5.12 Caissons

Lift Station Caisson Wall Design. Based on our experience with similar projects, the caisson technique may be utilized for the construction of proposed lift station. Using this technique, soil is excavated from within the structure and the structure sinks under its own weight. Soil friction on the structure is typically low immediately after construction due to the annulus created during excavation. If the annulus has not been grouted, the uplift pressure must be resisted by structural dead weight alone. If the annulus has been grouted, the recommendations provided in "Section 5.7-Loading on Buried Structures" may be utilized for the design of proposed caissons.

Caisson Construction. We recommend that the caisson construction be in accordance with Section 02476 of the 2011 City of Houston Standard Construction Specification (COHSCS).

Dry Construction. Dry construction can be utilized if the contractor operates sufficient external groundwater control system to maintain groundwater level and piezometric head safely below excavation bottom within caisson. The contractor should submit a groundwater control plan, prepared by a licensed engineer experienced in that type of work.

Wet Construction. In wet construction, external hydrostatic groundwater pressure is counteracted by water or slurry within caisson. Wet construction will be required if dewatering is not effective to bring the groundwater below the bottom of excavations.

Control of Sinking. The initial construction phase is frequently the decisive operation for the successful lowering of a caisson, since at this stage the lateral guidance of the caisson is not

sufficiently guaranteed. Soil excavation should start at the center of the caisson outwards towards the perimeter, which provides a continuous and systematic redistribution of the dead weight of the caisson from the ground surface to the cutting edges. At the times the caisson starts initial sinking and approaches the founding depth, the incremental depth of soil excavation near the caisson perimeter should be 12 inches or less to avoid potential tilting of the caisson. The caisson position should be surveyed periodically and adjusted accordingly if excessive deviation from the design position occurs. When the caisson sinks to a position approximately 4 to 8 inches above the design founding elevation, soil excavation should be stopped so that the caisson can sink under its self-weight to (or near) the design founding elevation.

5.13 Slab-on-Grade

Assumed Maximum Cut/Fill Depth. Site grading plan was not available at the time of writing this report. We have assumed that cut/fill of less than 1-foot will be required to bring the site to grade. In the event cut/fill in the building pad exceed 1-foot, we should be notified and allowed to review the design to assess the suitability of the recommendations provided in this section. ***GES must be allowed to review the finalized grading plan to assess the appropriateness of the recommendations provided here.***

Potential Vertical Slab Movements. Based on the information gathered during this investigation, a slab constructed on-grade will be subject to potential vertical slab movements of about up to 2.5-inches.

Subgrade Treatment Using Select Fill. The depth of subgrade treatment is dependent on desired post-construction PVR. The following table presents recommended depth of subgrade treatment to reduce the allowable post-construction PVR to 1-inch.

Subgrade Treatment - Select Fill Option		
PVR (inches)	Minimum Thickness of Select Fill Soil (feet, bgs) [1]	Thickness of Compacted Subgrade below Select Fill (inches) [2]
1	4.5	6

Note:
1. Depth measured below bottom of the slab-on-grade,
2. The subgrade to receive select fill soil should be scarified to a depth indicated above. The scarified subgrade should be compacted to 92 to 96 percent of the material's maximum standard Proctor dry density (ASTM D-698) at a workable moisture level at least 4 percentage points above optimum and placed in loose lifts not exceeding 9 inches.

Subgrade treatment should extend at least 3-feet horizontally beyond the perimeter of the building.

Subgrade Treatment at Exterior Doorways. Subgrade treatment should extend beneath sidewalk areas that abut exterior doorways to the building. Failure to perform subgrade treatment in these areas can increase the probability of differential heaving between exterior sidewalks and doorways, resulting in exterior doors that will not or have difficulty opening outward due to "sticking" caused by heaving sidewalk slabs.

Subgrade Moisture. The slab subgrade is prone to drying after being exposed and should be kept moist prior to slab placement.

Moisture Barrier. A moisture barrier should be used beneath the slab foundation in areas where floor coverings will be utilized (such as, but not limited to, wood flooring, tile, linoleum, and carpeting).

Slab Deflection Analysis. Coefficient of subgrade reaction, k, values are soil, load, and settlement dependent. Upon request by the Structural Engineer for this project, k value recommendations will be provided for the specific loading application in question.

5.14 Structural Slab

We understand the proposed elevated buildings, blower pad and headworks structure will consist of structural floor slab supported on piers. A minimum 8-inch void space between the bottom of the slab or grade beams and the underlying ground surface should be maintained.

5.15 Pavement

Recommendations for rigid pavement and preparation of the pavement subgrade are provided in the following sections. A traffic study indicating the number and type of vehicles on which to base the pavement design was not provided. Therefore, our recommendations are based upon our experience with similar projects assuming normal vehicular loading. Any unusual loading conditions should be brought to our attention prior to finalizing the pavement design so that we may assess and modify our recommendations as necessary.

5.15.1 Rigid Pavement

Portland cement concrete (PCC) with a minimum 28-day compressive strength of 3,500 pounds per square inch (psi) should be utilized for rigid pavement. Grade 60 reinforcing steel should be utilized in the transverse and longitudinal directions. The following pavement thicknesses and reinforcing are recommended:

Paving Use	Thickness	Reinforcing

	(inches)	
Parking Areas for Automobiles and Light Trucks	5	No. 3 bars spaced on 24-inch intervals or 12 x 12 - W5 x W5 welded wire fabric
Drive Lanes and Areas Subjected to Light to Medium Trucks	6	No. 3 bars spaced on 18-inch intervals or 12 x 12 - W6 x W6 welded wire fabric
Areas Receiving Heavy Trucks and Dumpsters	7	No. 3 bars spaced on 18-inch intervals or 12 x 12 - W6.5 x W6.5 welded wire fabric

Concrete pavement thicknesses provided above can be increased an extra 1-inch as a substitution for lime stabilization of the pavement subgrade, provided a passing proof-roll is achieved prior to placement of reinforcing steel at the pavement subgrade areas.

Contraction joints should be spaced at about 24 times the pavement thickness up to a maximum of 15 feet in any direction. Saw cut control joints should be cut within 6 to 12 hours of concrete placement. Expansion joints should be spaced as necessary and should be placed where the pavement abuts any structure. Dowels should have a diameter equal to $^1/_8$ the slab thickness, be spaced on 12-inch intervals, and be embedded at least 9-inches. Where not specified herein, concrete pavement should comply with Texas Department of Transportation (TxDOT) Standard Specifications, Item 360, "Concrete Pavement", or local equivalent.

5.15.2 Pavement Subgrade

Potential Vertical Soil Movements. We have assumed that site treatment as recommended in Section 5.13 - Slab-on-Grade will not be performed within the pavement areas for this project. As a result, pavements will be subjected to the calculated PVR for this site. Based on the information gathered during this investigation, a pavement constructed on-grade will be subject to potential vertical movements of up to about 2.5-inches. Because heave is generally associated with a source of water, it can occur differentially. Edge lift, excessive cracking, corner breaks, and poor ride quality are just a few of the many examples of pavement issues that can occur when in-situ PVR values are high. We should be contacted to provide PVR mitigation strategies to help reduce potential movements if desired. Strategies available for reducing potential soil movements include soil stabilization with lime or cement, removal of the on-site expansive soils and replacement with select fill or moisture conditioned soil.

Lean to fat clay is expected to be encountered or exposed at pavement subgrade. The pavement subgrade should be placed in loose lifts not exceeding 8-inches and should be uniformly compacted to a minimum of 95 percent maximum dry density (per ASTM D-698) and within ±2 percent of the optimum moisture content. We recommend the subgrade be stabilized using the following:

Reagent	Application Rate (pounds per square yard)	Application Depth (inches)
Lime	27	6

Lime stabilization should be performed in accordance with TxDOT Standard Specifications, Item 260, “Lime Stabilized Subgrade”, or local equivalent.

6.0 GENERAL COMMENTS

Data Assumptions. By necessity, geotechnical engineering design recommendations are based on a limited amount of information about subsurface conditions. In the analysis, the geotechnical engineer must assume subsurface conditions are similar to those encountered in the borings. The analyses, conclusions and recommendations contained in this report are based on site conditions as they existed at the time of the field investigation and on the assumption that the exploratory borings are representative of the subsurface conditions throughout the site; that is, the subsurface conditions everywhere are not significantly different from those disclosed by the borings at the time they were completed.

Subsurface Anomalies. Anomalies in subsurface conditions are often revealed during construction. If during construction, different subsurface conditions from those encountered in our borings are observed, or appear to be present in excavations, we must be advised promptly so that we can review these conditions and reconsider our recommendations where necessary.

Change of Conditions. If there is a substantial lapse of time between submission of this report and the start of the work at the site, if conditions have changed due either to natural causes or to construction operations at or adjacent to the site, or if structure locations, structural loads or finish grades are changed, we should be promptly informed and retained to review our report to determine the applicability of the conclusions and recommendations, considering the changed conditions and/or time lapse.

Design Review. Recommendations in our report are contingent upon GES reviewing and approving in writing the following design items prior to construction:

- Site grading plan, and
- Foundation plan, details and related structural loads.

Construction Materials Testing and Inspection. GES should be retained to observe earthwork and foundation installation and perform materials evaluation and testing during the construction phase of the project. This enables GES’s geotechnical engineer to stay abreast of the project and to be readily available to evaluate unanticipated conditions, to conduct additional tests if required and, when necessary, to recommend alternative

solutions to unanticipated conditions. It is proposed that construction phase observation and materials testing commence by the project geotechnical engineer (GES) at the outset of the project. Experience has shown that the most suitable method for procuring these services is for the owner to contact directly with the project geotechnical engineer. This results in a clear, direct line of communication between the owner and the owner's design engineers and the geotechnical engineer.

Report Recommendations are Preliminary. Until the recommended construction phase services are performed by GES, the recommendations contained in this report on such items as final foundation bearing elevations, final depth of undercut of expansive soils for non-expansive earth fill pads and other such subsurface-related recommendations should be considered as preliminary.

Liability Limitation. GES cannot assume responsibility or liability for recommendations provided in this report if construction inspection and/or testing recommended herein is performed by another party.

Warranty. This report has been prepared for the exclusive use of the Client and their designated agents for specific application to design of this project. We have used that degree of care and skill ordinarily exercised under similar conditions by reputable members of our profession practicing in the same or similar locality. No other warranty, expressed or implied, is made or intended.

Appendix A - Project Location Diagrams

PROJECT LOCATION DIAGRAM - GENERAL

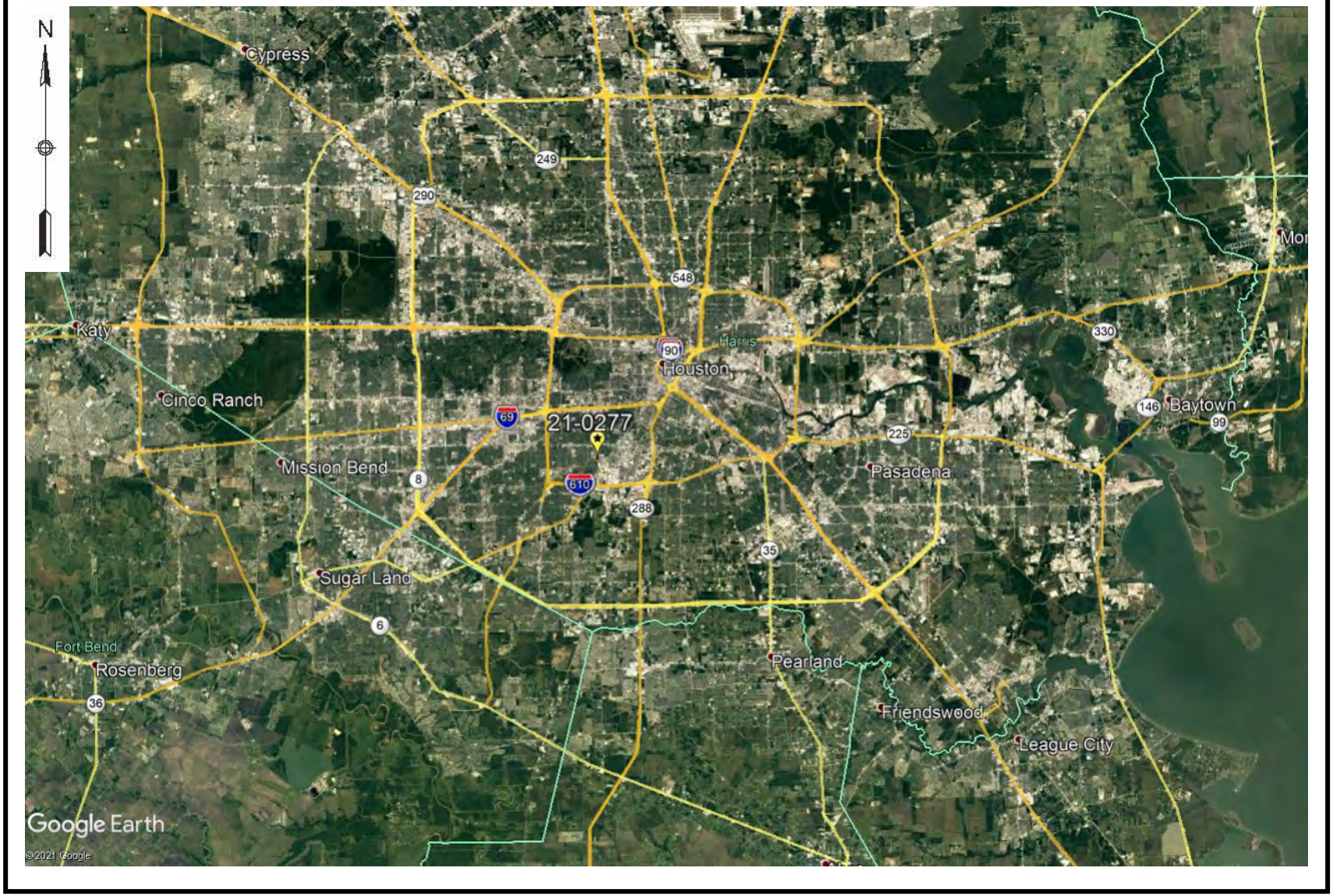

PROJECT LOCATION DIAGRAM - LOCAL



GES Project No. 21-0277

West U WWTP Improvements

Appendix B - Boring Location Diagram

BORING LOCATION DIAGRAM



Appendix C - Boring Logs and Laboratory Results

Gorrondona Engineering Services
4641 Kennedy Commerce Drive, Houston, TX 77032
Telephone: 281-469-3347; Fax: 281-469.3594

BORING NUMBER B-01

CLIENT Kimley-Horn and Associates, Inc.
PROJECT NAME West U WWTP Improvements
PROJECT NUMBER 21-0277
PROJECT LOCATION Houston, Texas
DATE STARTED 6/8/21 **COMPLETED** 6/8/21
GROUND ELEVATION **NORTHING**
CONTRACTOR GES
GROUND WATER LEVELS: **EASTING**
METHOD Auger 0 - 35 feet
INITIALLY ENCOUNTERED Not Encountered
LOGGED BY J.A. **CHECKED BY** L.S.
AFTER 15 MIN. Not Encountered
NOTES Wet at 30-feet.
24hrs AFTER Not Encountered

DEPTH (ft)	GRAPHIC LOG	MATERIAL DESCRIPTION	SAMPLE TYPE NUMBER	RECOVERY % (RQD)	BLOW COUNTS (N VALUE)	POCKET PEN. (tsf)	TORVANE (tsf)	Compressive Strength (tsf)	Confining Pressure (psi)	DRY UNIT WT. (pcf)	MOISTURE CONTENT (%)	ATTERBERG LIMITS: LIQUID LIMIT	ATTERBERG LIMITS: PLASTIC LIMIT	ATTERBERG LIMITS: PLASTICITY INDEX	FINES CONTENT (%)
0		PAVEMENT - 7.3-Inch CONCRETE.													
		SANDY LEAN CLAY (CL) / LEAN CLAY WITH SAND (CL) FILL - Stiff, dark gray and light gray.	ST			2.50	0.9				23				
			ST			2.50	0.9				25	35	13	22	71
5		FAT CLAY WITH SAND (CH) / FAT CLAY (CH) - Stiff to very stiff, light gray, with calcareous nodules and iron nodules.	ST			2.50	1.0				28				
			ST			2.50	0.8				21	73	17	56	83
			ST			4.00	1.0				17				
10															
			ST			3.00	0.5	1.1		106	19				
15		SILTY SAND (SM) - Medium dense to dense, light gray and tan.													
			SS		9-12-15 (27)						9				
20															
			SS		10-15-20 (35)						9				
25															
			SS		12-18-23 (41)						19				
30		Wet at 30-feet.													
			SS		12-17-21 (38)						16				
35															

Bottom of hole at 35.0 feet.

TEST ONLY 21-0277.GPJ NEW GINT TEMP.GDT 6/23/21

Gorrondona Engineering Services
4641 Kennedy Commerce Drive, Houston, TX 77032
Telephone: 281-469-3347; Fax: 281-469.3594

BORING NUMBER B-02

CLIENT Kimley-Horn and Associates, Inc.
PROJECT NAME West U WWTP Improvements
PROJECT NUMBER 21-0277
PROJECT LOCATION Houston, Texas
DATE STARTED 6/8/21 **COMPLETED** 6/8/21
GROUND ELEVATION **NORTHING**
CONTRACTOR GES
GROUND WATER LEVELS: **EASTING**
METHOD Auger 0 - 35 feet
INITIALLY ENCOUNTERED Not Encountered
LOGGED BY J.A. **CHECKED BY** L.S.
AFTER 15 MIN. Not Encountered
NOTES Wet at 30-feet.
24hrs AFTER Not Encountered

DEPTH (ft)	GRAPHIC LOG	MATERIAL DESCRIPTION	SAMPLE TYPE NUMBER	RECOVERY % (RQD)	BLOW COUNTS (N VALUE)	POCKET PEN. (tsf)	TORVANE (tsf)	Compressive Strength (tsf)	Confining Pressure (psi)	DRY UNIT WT. (pcf)	MOISTURE CONTENT (%)	ATTERBERG LIMITS: LIQUID LIMIT	ATTERBERG LIMITS: PLASTIC LIMIT	ATTERBERG LIMITS: PLASTICITY INDEX	FINES CONTENT (%)
0		SANDY FAT CLAY (CH) / SANDY LEAN CLAY (CL) FILL - Firm to very stiff, dark gray and brown.	ST			1.50	0.8				32	60	18	42	68
			ST			3.50	1.1				17				
5			ST			2.50	0.9				22	42	14	28	58
		FAT CLAY WITH SAND (CH) / FAT CLAY (CH) - Stiff to very stiff, dark gray and light gray, with iron nodules.	ST			2.50	1.3				27				
			ST			3.00	1.0	1.9		96	28				
10															
			ST			3.50	1.2				25				
15		SANDY LEAN CLAY (CL) - Hard, light gray and light brown.													
			ST			4.50+	1.0				21				
20		CLAYEY SAND (SC) - Stiff, light gray.													
			ST			2.00	0.5				8				
25		SILTY SAND (SM) - Dense, tan.													
			SS		10-15-20 (35)						23				
30		Wet at 30-feet.													
			SS		12-16-23 (39)						22				
35															

Bottom of hole at 35.0 feet.

TEST ONLY 21-0277.GPJ NEW GINT TEMP.GDT 6/23/21

Gorrondona Engineering Services
4641 Kennedy Commerce Drive, Houston, TX 77032
Telephone: 281-469-3347; Fax: 281-469.3594

BORING NUMBER B-03

CLIENT Kimley-Horn and Associates, Inc.
PROJECT NAME West U WWTP Improvements
PROJECT NUMBER 21-0277
PROJECT LOCATION Houston, Texas
DATE STARTED 6/8/21 **COMPLETED** 6/8/21
GROUND ELEVATION **NORTHING**
CONTRACTOR GES
GROUND WATER LEVELS: **EASTING**
METHOD Auger 0 - 35 feet
▽ **INITIALLY ENCOUNTERED** 31.0 ft
LOGGED BY J.A. **CHECKED BY** L.S.
▼ **AFTER 15 MIN.** 31.0 ft
NOTES
24hrs AFTER Not Encountered

DEPTH (ft)	GRAPHIC LOG	MATERIAL DESCRIPTION	SAMPLE TYPE NUMBER	RECOVERY % (RQD)	BLOW COUNTS (N VALUE)	POCKET PEN. (tsf)	TORVANE (tsf)	Compressive Strength (tsf)	Confining Pressure (psi)	DRY UNIT WT. (pcf)	MOISTURE CONTENT (%)	ATTERBERG LIMITS: LIQUID LIMIT	ATTERBERG LIMITS: PLASTIC LIMIT	ATTERBERG LIMITS: PLASTICITY INDEX	FINES CONTENT (%)
0		SANDY FAT CLAY (CH) FILL - Hard, dark gray and gray, with crushed concrete.	ST			4.50+					27				
			ST			4.50+	1.0				29	68	16	52	61
5		SILTY SAND (SM) FILL - Light gray and light brown, with gravel.	ST								13				
		FAT CLAY WITH SAND (CH) FILL - Soft, light gray, with iron nodules.	ST			1.00	0.4	0.9		92	29				
10		FAT CLAY WITH SAND (CH) / FAT CLAY (CH) - Soft to firm, light gray, with iron nodules.	ST			1.50	0.4				26	75	16	59	89
		CLAYEY SAND (SC) - Firm, tan and light brown.													
15			ST			1.50	0.1				12				
		SILTY SAND (SM) - Dense, tan and light brown. With clay pockets at 15- to 20-feet.													
20			ST			0.50					10				
25			SS		12-16-21 (37)						6				
30			SS		12-18-21 (39)						23				
		▼													
35			SS		13-19-23 (42)						20				

Bottom of hole at 35.0 feet.

TEST ONLY 21-0277.GPJ NEW GINT TEMP.GDT 6/23/21

Gorrondona Engineering Services
4641 Kennedy Commerce Drive, Houston, TX 77032
Telephone: 281-469-3347; Fax: 281-469.3594

BORING NUMBER B-04

CLIENT Kimley-Horn and Associates, Inc.
PROJECT NAME West U WWTP Improvements
PROJECT NUMBER 21-0277
PROJECT LOCATION Houston, Texas
DATE STARTED 6/8/21 **COMPLETED** 6/8/21
GROUND ELEVATION **NORTHING**
CONTRACTOR GES
GROUND WATER LEVELS: **EASTING**
METHOD Auger 0 - 8 feet
INITIALLY ENCOUNTERED Not Encountered
LOGGED BY J.A. **CHECKED BY** L.S.
AFTER 15 MIN. Not Encountered
NOTES
24hrs AFTER Not Encountered

DEPTH (ft)	GRAPHIC LOG	MATERIAL DESCRIPTION	SAMPLE TYPE NUMBER	RECOVERY % (RQD)	BLOW COUNTS (N VALUE)	POCKET PEN. (tsf)	TORVANE (tsf)	Compressive Strength (tsf)	Confining Pressure (psi)	DRY UNIT WT. (pcf)	MOISTURE CONTENT (%)	ATTERBERG LIMITS: LIQUID LIMIT	ATTERBERG LIMITS: PLASTIC LIMIT	ATTERBERG LIMITS: PLASTICITY INDEX	FINES CONTENT (%)
0		PAVEMENT - 3-Inch BASE.													
		SANDY FAT CLAY (CH) FILL - Stiff to hard, dark gray and light gray, with gravel.	ST			2.00	0.9				19	67	17	50	62
			ST			4.00	1.3				15				
5			ST			3.00	1.0				21	57	14	43	67
			ST			4.50+					19				
		Boring was terminated due to Auger Refusal at 8-feet depth. Bottom of hole at 8.0 feet.													

TEST ONLY 21-0277.GPJ NEW GINT TEMP.GDT 6/23/21

Gorrondona Engineering Services
4641 Kennedy Commerce Drive, Houston, TX 77032
Telephone: 281-469-3347; Fax: 281-469.3594

BORING NUMBER B-05

CLIENT Kimley-Horn and Associates, Inc.
PROJECT NAME West U WWTP Improvements
PROJECT NUMBER 21-0277
PROJECT LOCATION Houston, Texas
DATE STARTED 6/8/21 **COMPLETED** 6/8/21
GROUND ELEVATION **NORTHING**
CONTRACTOR GES
GROUND WATER LEVELS: **EASTING**
METHOD Auger 0 - 25 feet
INITIALLY ENCOUNTERED Not Encountered
LOGGED BY J.A. **CHECKED BY** L.S.
AFTER 15 MIN. Not Encountered
NOTES
24hrs AFTER Not Encountered

DEPTH (ft)	GRAPHIC LOG	MATERIAL DESCRIPTION	SAMPLE TYPE NUMBER	RECOVERY % (RQD)	BLOW COUNTS (N VALUE)	POCKET PEN. (tsf)	TORVANE (tsf)	Compressive Strength (tsf)	Confining Pressure (psi)	DRY UNIT WT. (pcf)	MOISTURE CONTENT (%)	ATTERBERG LIMITS: LIQUID LIMIT	ATTERBERG LIMITS: PLASTIC LIMIT	ATTERBERG LIMITS: PLASTICITY INDEX	FINES CONTENT (%)
0		PAVEMENT - 3-Inch BASE.													
		CLAYEY SAND (SC) FILL - Light gray and light brown, with gravel.	AU								17				
			ST								22				
5			AU												
			AU												
		FAT CLAY WITH SAND (CH) / FAT CLAY (CH) - Stiff to very stiff, light gray, with iron nodules and sand pockets.	ST			2.50	1.0	1.6		96	28				
10															
			ST			4.00	0.8				21	40	13	27	73
15		SILTY SAND (SM) - Tan and light gray, with clay pockets.													
			ST								16				
20		CLAYEY SAND (SC) - Soft, tan.													
			ST			1.00					18				
25															

Bottom of hole at 25.0 feet.

TEST ONLY 21-0277.GPJ NEW GINT TEMP.GDT 6/23/21

Gorrondona Engineering Services
4641 Kennedy Commerce Drive, Houston, TX 77032
Telephone: 281-469-3347; Fax: 281-469.3594

BORING NUMBER B-06

CLIENT Kimley-Horn and Associates, Inc.
PROJECT NAME West U WWTP Improvements
PROJECT NUMBER 21-0277
PROJECT LOCATION Houston, Texas
DATE STARTED 6/8/21 **COMPLETED** 6/8/21
GROUND ELEVATION **NORTHING**
CONTRACTOR GES
GROUND WATER LEVELS: **EASTING**
METHOD Auger 0 - 25 feet
INITIALLY ENCOUNTERED Not Encountered
LOGGED BY J.A. **CHECKED BY** L.S.
AFTER 15 MIN. Not Encountered
NOTES
24hrs AFTER Not Encountered

DEPTH (ft)	GRAPHIC LOG	MATERIAL DESCRIPTION	SAMPLE TYPE NUMBER	RECOVERY % (RQD)	BLOW COUNTS (N VALUE)	POCKET PEN. (tsf)	TORVANE (tsf)	Compressive Strength (tsf)	Confining Pressure (psi)	DRY UNIT WT. (pcf)	MOISTURE CONTENT (%)	ATTERBERG LIMITS: LIQUID LIMIT	ATTERBERG LIMITS: PLASTIC LIMIT	ATTERBERG LIMITS: PLASTICITY INDEX	FINES CONTENT (%)
0		PAVEMENT - 5.5-Inch CONCRETE.													
		SANDY LEAN CLAY (CL) FILL - Stiff, light gray and light brown.	ST								25				
			ST			2.00	0.4				22	32	13	19	56
5		FAT CLAY WITH SAND (CH) FILL - Stiff, dark gray.	ST			3.00	0.8				22				
		FAT CLAY WITH SAND (CH) / FAT CLAY (CH) - Stiff, dark gray and light gray, with iron nodules and calcareous nodules.	ST			2.50	0.9					85	18	67	90
10			ST			2.50	1.0	1.6		103	24				
		SANDY LEAN CLAY (CL) - Stiff, light gray and light brown.													
15			ST			2.50	1.0				22				
20			ST			2.00	0.9	.7		108	19				
25			ST			3.00	1.0				21				

Bottom of hole at 25.0 feet.

TEST ONLY 21-0277.GPJ NEW GINT TEMP.GDT 6/23/21

ABSORPTION SWELL TEST (ASTM D4546) RESULTS						
Boring No.	B-01	B-02	B-03	B-06	B-06	
Average Sample Depth (ft)	3	5	3	3	7	
Sample Height (in)	0.8	0.8	0.8	0.8	0.8	
Sample Diameter (in)	2.5	2.5	2.5	2.5	2.5	
Initial Sample Volume (cu in)	3.93	3.93	3.93	3.93	3.93	
Initial Sample Weight (gr)	128.7	135.2	124.8	135.2	120.5	
Initial Moisture (%)	23	18	31	21	31	
Final Moisture (%)	25	19	32	21	33	
Initial Wet Unit Weight (pcf)	125	131	121	131	117	
Initial Dry Unit Weight (pcf)	101	111	93	109	89	
Applied Over Burden (psi)	2.6	4.7	2.6	2.6	6.7	
Initial Dial Reading (in)	0.017	0.0243	0.0171	0.0371	0.0194	
Final Dial Reading (in)	0.017	0.029	0.0232	0.0406	0.0194	
Swell (%)	0.00	0.59	0.76	0.44	0.00	

UNCONFINED COMPRESSION TEST

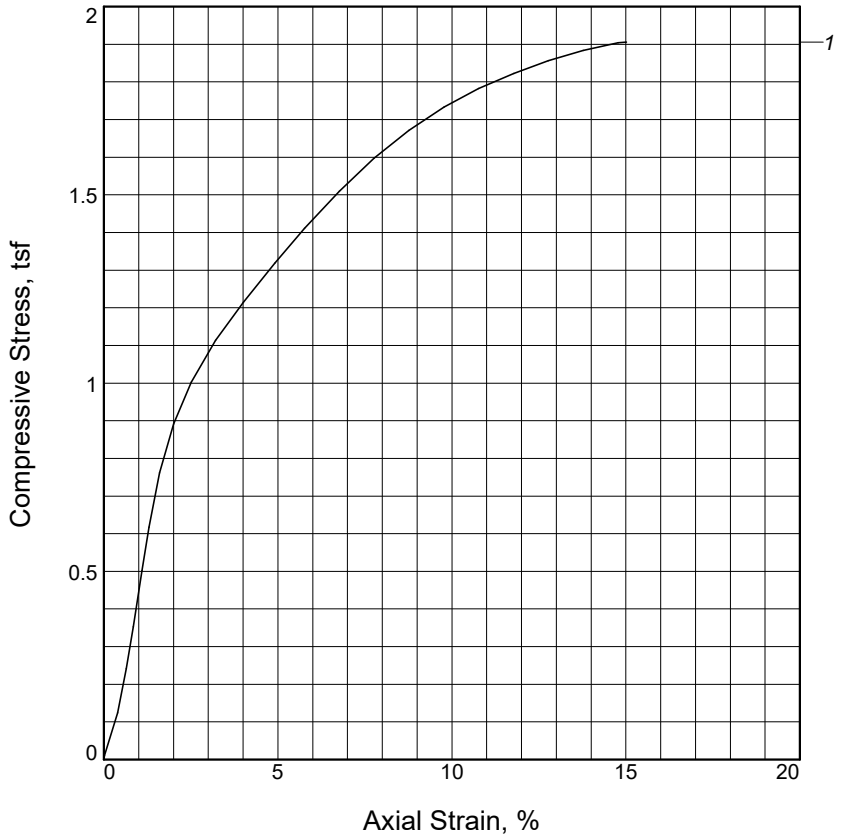

Sample No.	1			
Unconfined strength, tsf	1.9057			
Undrained shear strength, tsf	0.9529			
Failure strain, %	15.0			
Strain rate, %/min.	1.00			
Water content, %	27.9			
Wet density, pcf	122.7			
Dry density, pcf	95.9			
Saturation, %	98.5			
Void ratio	0.7698			
Specimen diameter, in.	2.76			
Specimen height, in.	5.75			
Height/diameter ratio	2.08			

Description: Light gray FAT CLAY (CH)

LL =	**PL =**	**PI =**	**Assumed GS=** 2.72	**Type:** Shelby Tube

Project No.: 21-0277
Date Sampled: 6/8/2021
Remarks:

Client: Kimley-Horn and Associates, Inc.

Project: West U WWTP Improvements

Location: Boring B-02
Sample Number: 5 **Depth:** 8' - 10'

UNCONFINED COMPRESSION TEST
Gorrondona Engineering Services
Houston, Texas

Figure _____

Tested By: L.R. **Checked By:** L.S.

UNCONFINED COMPRESSION TEST

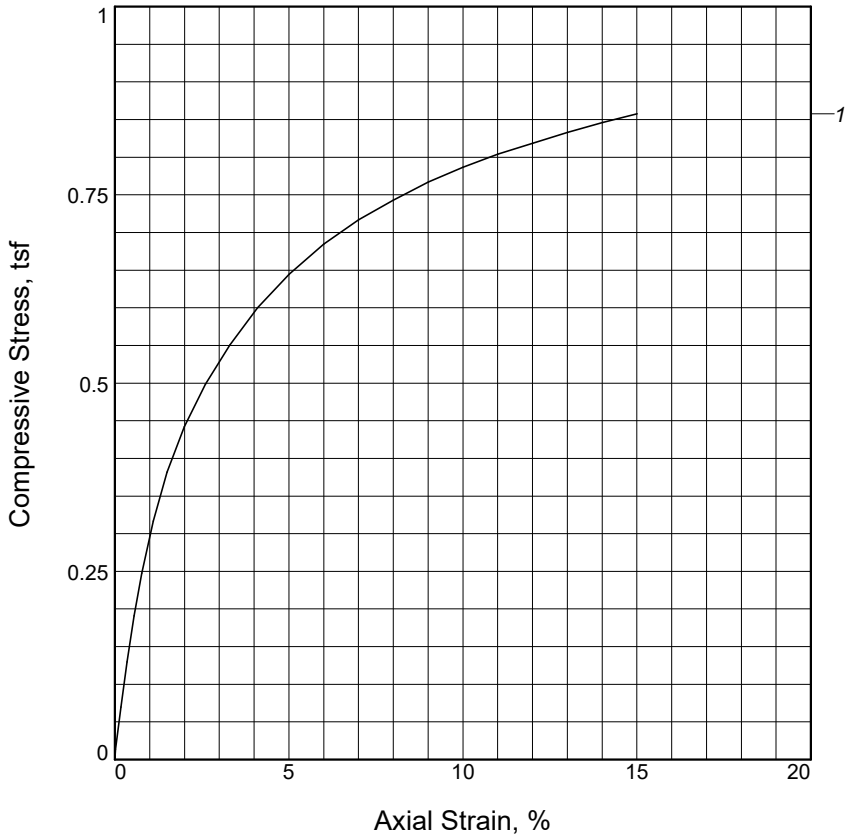

Sample No.	1			
Unconfined strength, tsf	0.8578			
Undrained shear strength, tsf	0.4289			
Failure strain, %	15.0			
Strain rate, %/min.	1.00			
Water content, %	29.1			
Wet density, pcf	118.9			
Dry density, pcf	92.1			
Saturation, %	93.9			
Void ratio	0.8444			
Specimen diameter, in.	2.78			
Specimen height, in.	5.75			
Height/diameter ratio	2.07			

Description: Light gray FAT CLAY (CH)

LL =	**PL =**	**PI =**	**Assumed GS=** 2.72	**Type:** Shelby Tube

Project No.: 21-0277
Date Sampled: 6/8/2021
Remarks:

Figure _____

Client: Kimley-Horn and Associates, Inc.

Project: West U WWTP Improvements

Location: Boring B-03
Sample Number: 4 **Depth:** 6' - 8'

UNCONFINED COMPRESSION TEST
Gorrondona Engineering Services
Houston, Texas

Tested By: L.R. **Checked By:** L.S.

UNCONFINED COMPRESSION TEST

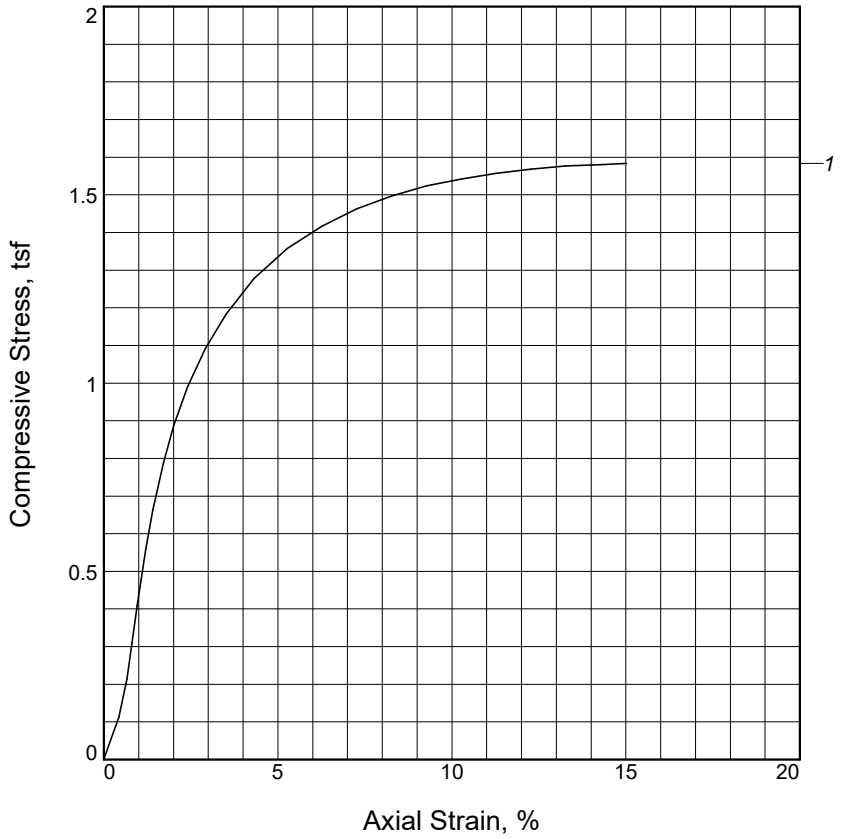

Sample No.	1			
Unconfined strength, tsf	1.5832			
Undrained shear strength, tsf	0.7916			
Failure strain, %	15.0			
Strain rate, %/min.	1.00			
Water content, %	23.9			
Wet density, pcf	126.9			
Dry density, pcf	102.5			
Saturation, %	98.8			
Void ratio	0.6572			
Specimen diameter, in.	2.77			
Specimen height, in.	5.75			
Height/diameter ratio	2.08			

Description: Dark gray and light gray FAT CLAY (CH)

LL =	**PL =**	**PI =**	**Assumed GS=** 2.72	**Type:** Shelby Tube

Project No.: 21-0277
Date Sampled: 6/8/2021
Remarks:

Figure _____

Client: Kimley-Horn and Associates, Inc.

Project: West U WWTP Improvements

Location: Boring B-06
Sample Number: 5 **Depth:** 8' - 10'

UNCONFINED COMPRESSION TEST
Gorrondona Engineering Services
Houston, Texas

Tested By: L.R. **Checked By:** L.S.

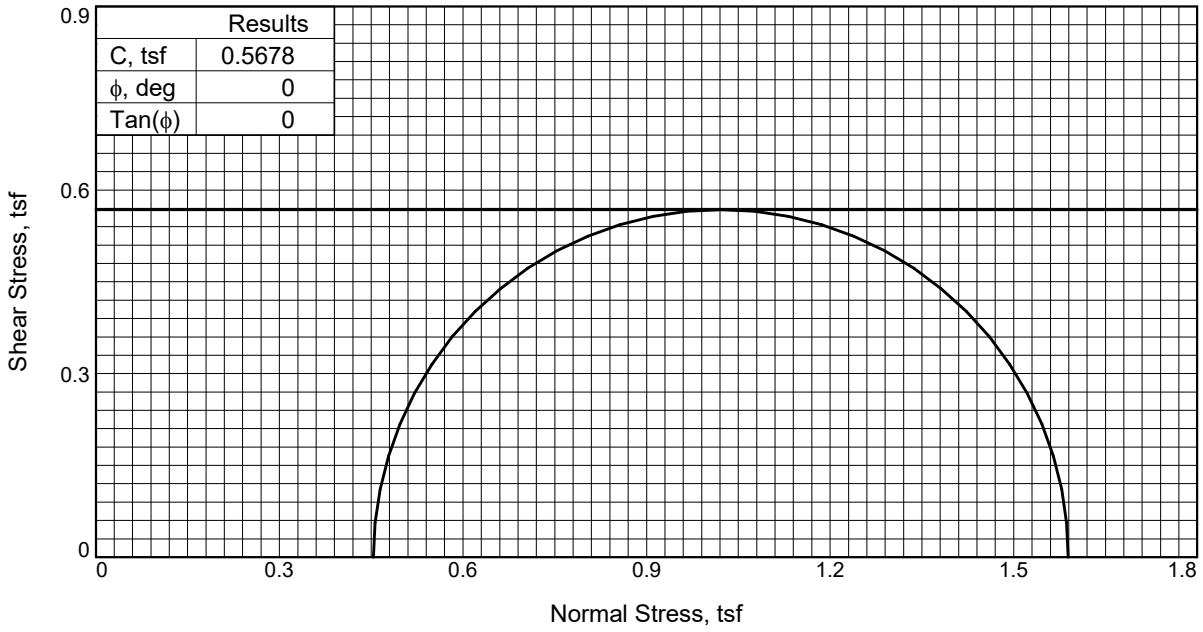

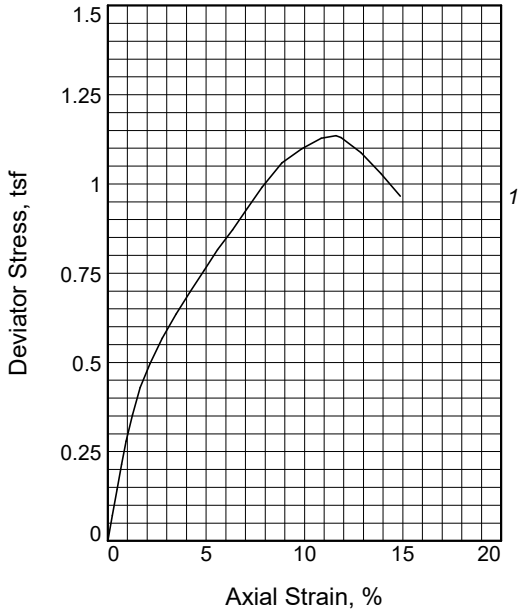

Sample No.		1
Initial	Water Content, %	18.9
	Dry Density, pcf	105.6
	Saturation, %	84.6
	Void Ratio	0.6074
	Diameter, in.	2.68
	Height, in.	5.75
At Test	Water Content, %	
	Dry Density, pcf	
	Saturation, %	
	Void Ratio	
	Diameter, in.	
	Height, in.	
Strain rate, %/min.		1.00
Back Pressure, tsf		0.000
Cell Pressure, tsf		0.454
Fail. Stress, tsf		1.136
Ult. Stress, tsf		
σ_1 Failure, tsf		1.589
σ_3 Failure, tsf		0.454

Type of Test:
Unconsolidated Undrained

Sample Type: Shelby Tube

Description: Light gray FAT CLAY (CH)

Assumed Specific Gravity= 2.72

Remarks:

Figure _____

Client: Kimley-Horn and Associates, Inc.

Project: West U WWTP Improvements

Location: Boring B-01

Sample Number: 6 **Depth:** 13' - 15'

Proj. No.: 21-0277 **Date Sampled:** 6/8/2021

TRIAXIAL SHEAR TEST REPORT
Gorrondona Engineering Services
Houston, Texas

Tested By: L.R. **Checked By:** L.S.

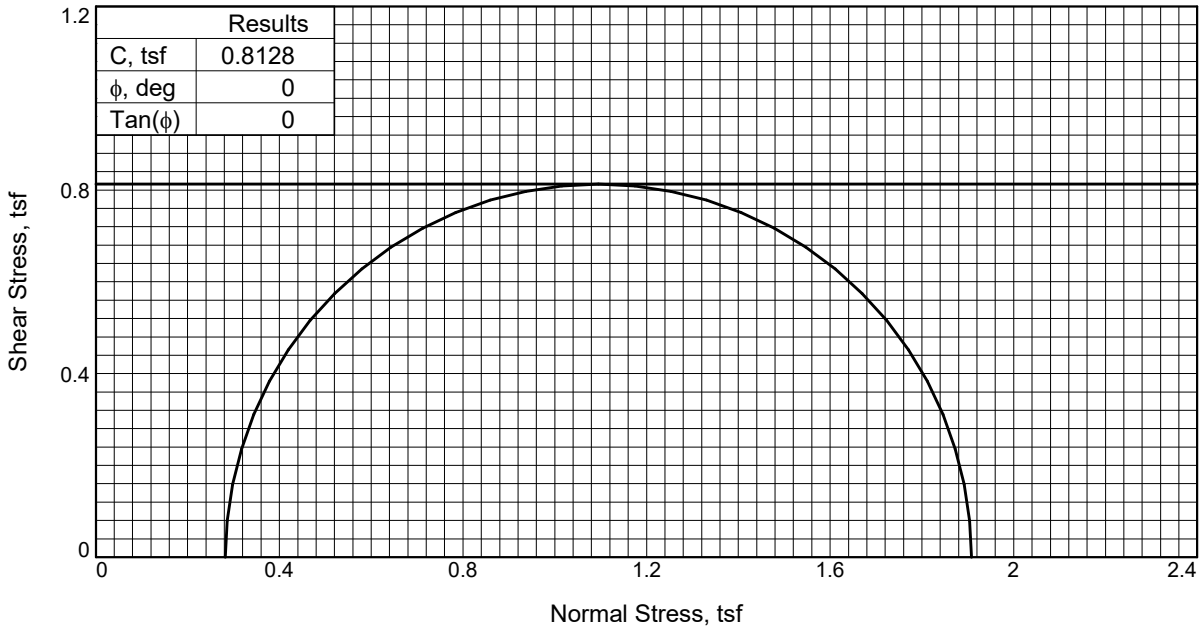

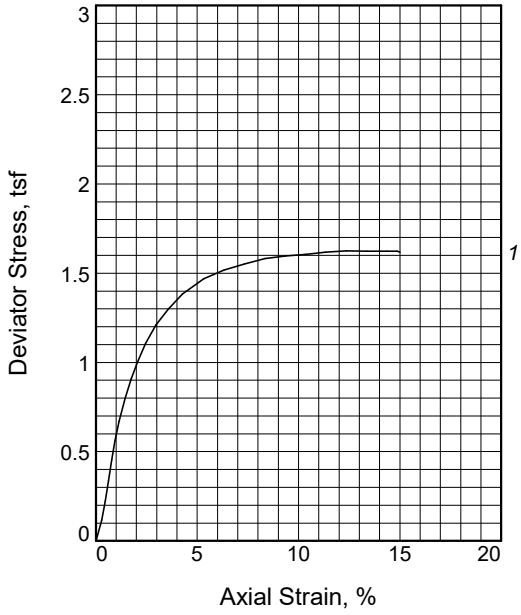

Sample No.		1
Initial	Water Content, %	27.9
	Dry Density, pcf	96.2
	Saturation, %	99.3
	Void Ratio	0.7649
	Diameter, in.	2.77
	Height, in.	5.75
At Test	Water Content, %	
	Dry Density, pcf	
	Saturation, %	
	Void Ratio	
	Diameter, in.	
	Height, in.	
Strain rate, %/min.		1.00
Back Pressure, tsf		0.000
Cell Pressure, tsf		0.282
Fail. Stress, tsf		1.626
Ult. Stress, tsf		
σ_1 Failure, tsf		1.908
σ_3 Failure, tsf		0.282

Type of Test:
Unconsolidated Undrained

Sample Type: Shelby Tube

Description: Light gray FAT CLAY (CH)

Assumed Specific Gravity= 2.72

Remarks:

Figure _____

Client: Kimley-Horn and Associates, Inc.

Project: West U WWTP Improvements

Location: Boring B-05

Sample Number: 5 **Depth:** 8' - 10'

Proj. No.: 21-0277 **Date Sampled:** 6/8/2021

TRIAXIAL SHEAR TEST REPORT
Gorrondona Engineering Services
Houston, Texas

Tested By: L.R. **Checked By:** L.S.

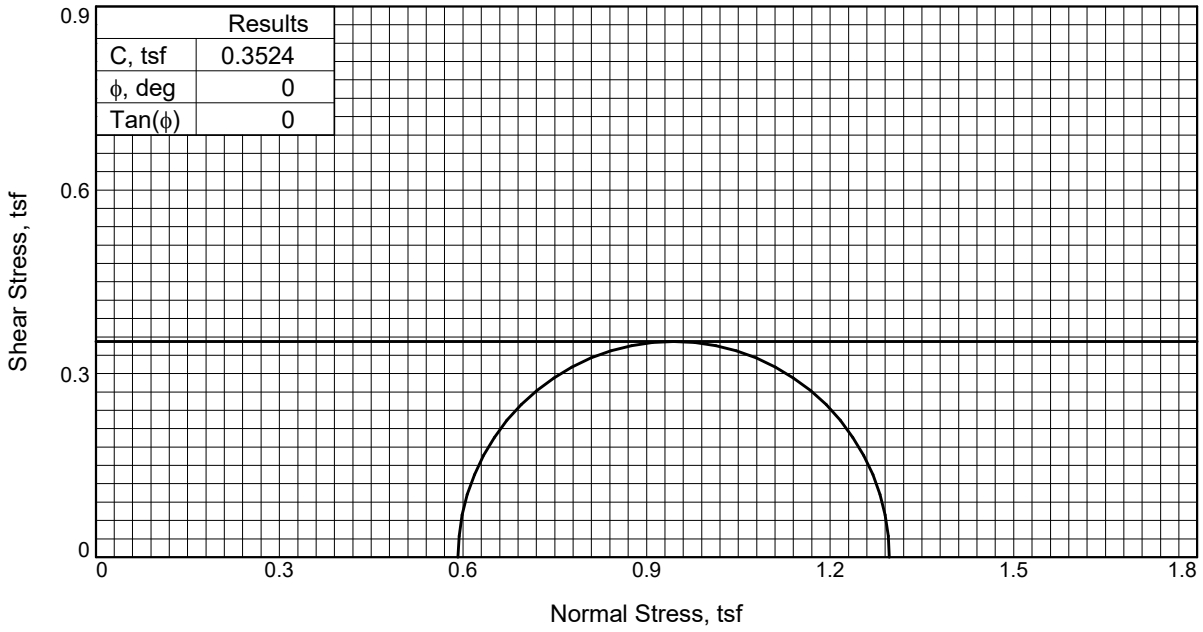

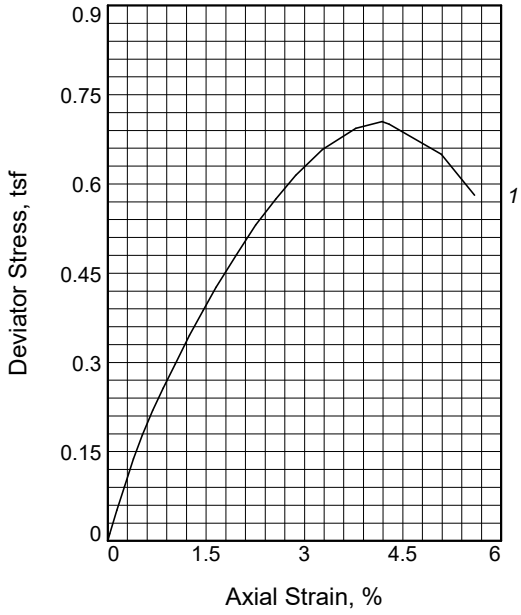

Sample No.		1
Initial	Water Content, %	19.3
	Dry Density, pcf	108.4
	Saturation, %	92.8
	Void Ratio	0.5661
	Diameter, in.	2.78
	Height, in.	5.75
At Test	Water Content, %	
	Dry Density, pcf	
	Saturation, %	
	Void Ratio	
	Diameter, in.	
	Height, in.	
Strain rate, %/min.		1.00
Back Pressure, tsf		0.000
Cell Pressure, tsf		0.592
Fail. Stress, tsf		0.705
Ult. Stress, tsf		
σ_1 Failure, tsf		1.297
σ_3 Failure, tsf		0.592

Type of Test:
Unconsolidated Undrained

Sample Type: Shelby Tube

Description: Light gray and light brown SANDY LEAN CLAY (CL)

Assumed Specific Gravity= 2.72

Remarks:

Figure _____

Client: Kimley-Horn and Associates, Inc.

Project: West U WWTP Improvements

Location: Boring B-06

Sample Number: 7 **Depth:** 18' - 20'

Proj. No.: 21-0277 **Date Sampled:** 6/8/2021

TRIAXIAL SHEAR TEST REPORT
Gorrondona Engineering Services
Houston, Texas

Tested By: L.R. **Checked By:** L.S.

Appendix D - Aerial Photographs

AERIAL PHOTOGRAPH - 2020



AERIAL PHOTOGRAPH - 2017

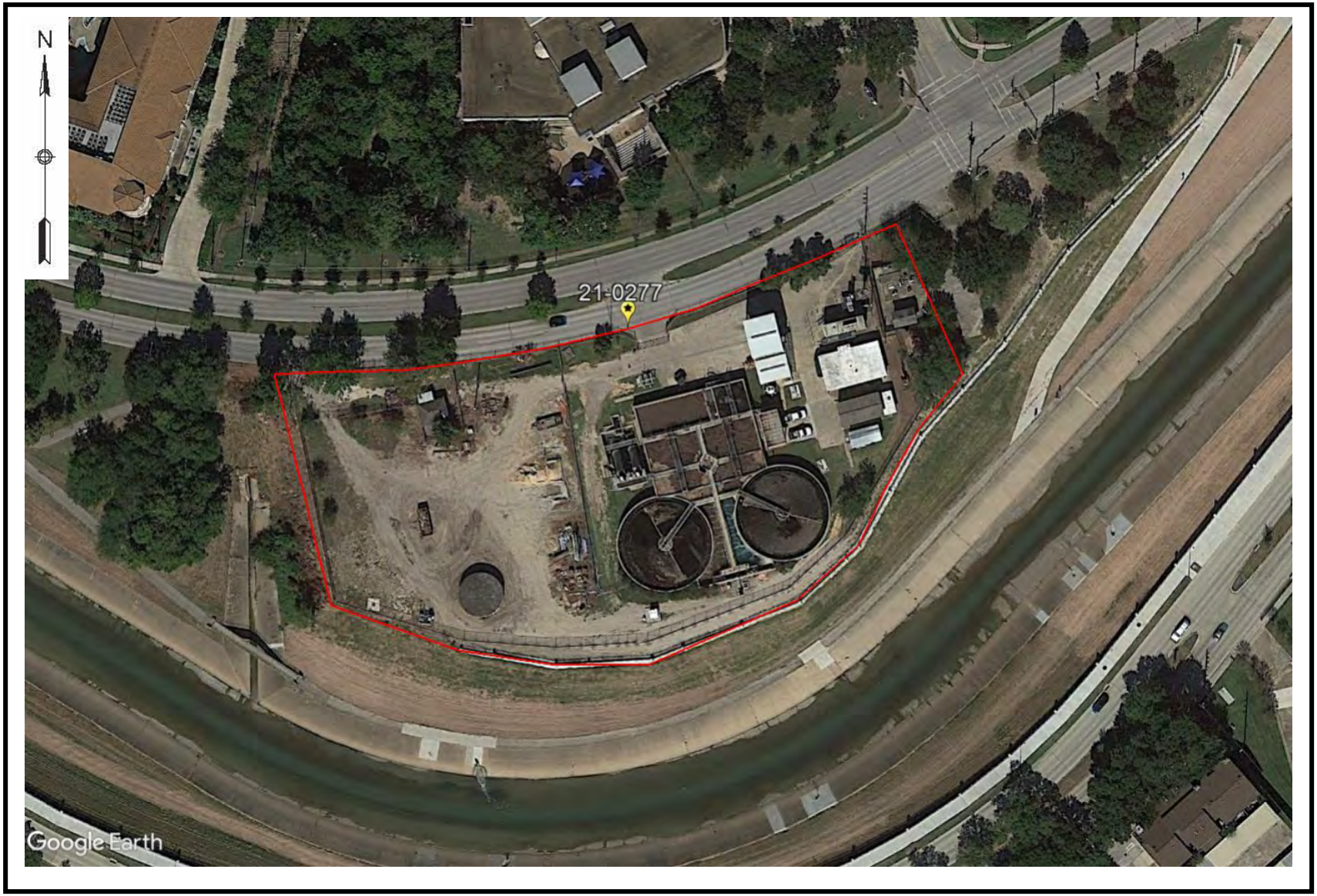

AERIAL PHOTOGRAPH - 2014



AERIAL PHOTOGRAPH - 2010



AERIAL PHOTOGRAPH - 2008



AERIAL PHOTOGRAPH - 2006



AERIAL PHOTOGRAPH - 2002



AERIAL PHOTOGRAPH - 1995



AERIAL PHOTOGRAPH - 1978



Appendix E - USGS Topographic Map

USGS TOPOGRAPHIC MAP



Appendix F - Site Photographs

SITE PHOTOGRAPHS



Facing South at Boring B-01



Facing Northwest at Boring B-02



Facing Northwest at Boring B-03



Facing Northeast at Boring B-04

SITE PHOTOGRAPHS



Facing Southwest at Boring B-05



Facing West at Boring B-06

Appendix G - Geologic Information

GEOLOGIC ATLAS

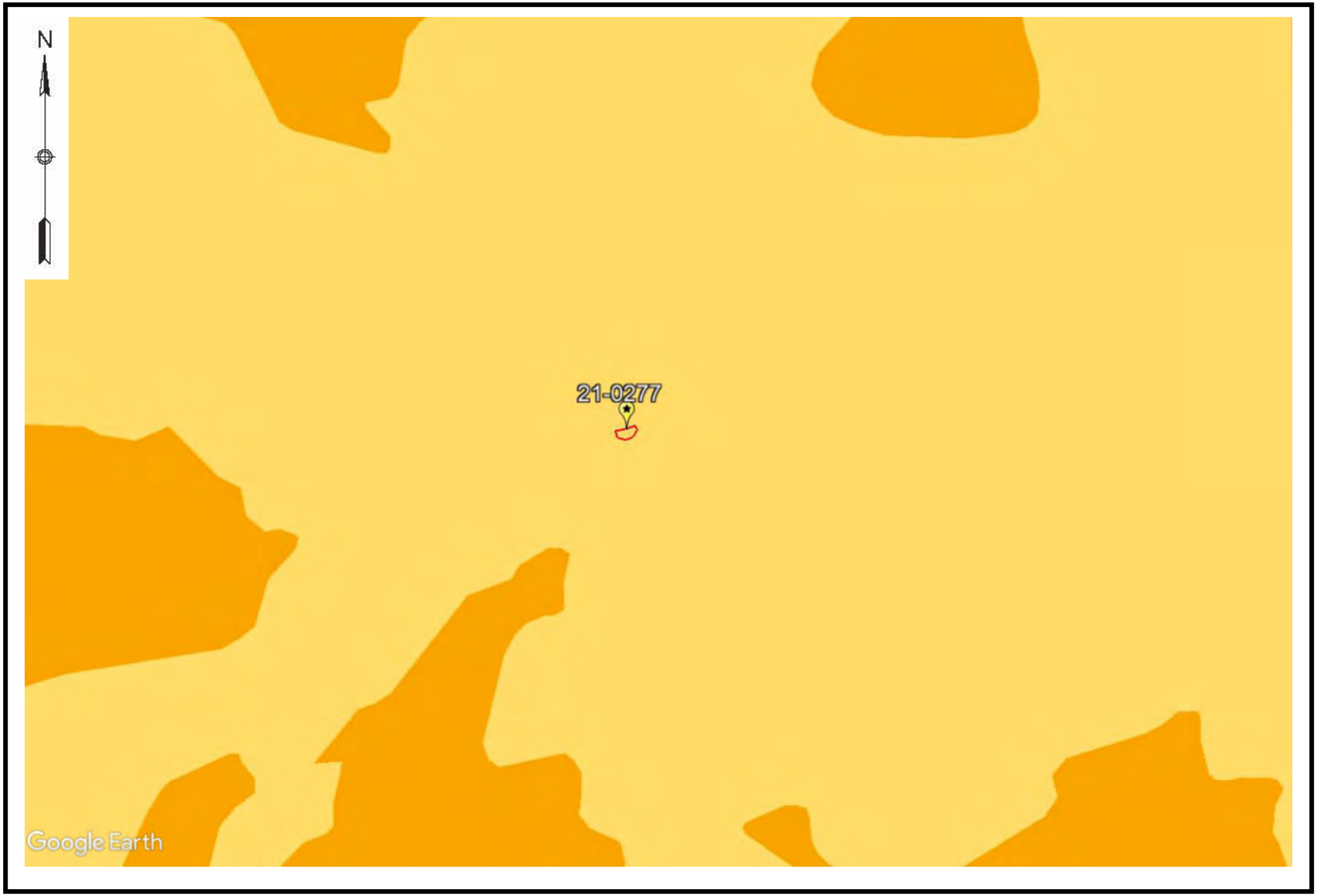

Mineral Resources On-Line Spatial Data

Beaumont Formation, areas predominantly clay

Beaumont Formation, areas predominantly clay

State	Texas
Name	Beaumont Formation, areas predominantly clay
Geologic age	Phanerozoic | Cenozoic | Quaternary | Pleistocene-Late
Original map label	Qbc
Comments	On McAllen-Brownsville Sheet (1976) dominantly clay and mud of low permeability. (from Moore and Wermund, 1993a, 1993b): Light- to dark-gray and bluish- to greenish-gray clay and silt, intermixed and interbedded; contains beds and lenses of fine sand, decayed organic matter, and many buried organic-rich, oxidized soil(?) zones that contain calcareous and ferruginous nodules. Very lt. gray to v. lt. yell-gray sediment cemented by calcium carbonate present in varied forms, veins, laminar zones, burrows, root casts, nodules. Locally, small gypsum crystals present. Includes plastic and compressible clay and mud deposited in flood basins, coastal lakes, and former stream channels on a deltaic plain. Disconformably overlies Lissie Fm. Thickness 5-10 m along north edge of outcrop; thickens southward in subsurface to more than 100 m.
Primary rock type	clay or mud
Secondary rock type	silt
Other rock types	
Lithologic constituents	Major Unconsolidated > Fine-detrital > Silt *(Bed)* Unconsolidated > Fine-detrital > Clay *(Bed)*
Map references	Bureau of Economic Geology, 1992, Geologic Map of Texas: University of Texas at Austin, Virgil E. Barnes, project supervisor, Hartmann, B.M. and Scranton, D.F., cartography, scale 1:500,000
Unit references	Bureau of Economic Geology, 1975, Corpus Christi Sheet, Geologic Atlas of Texas, Bureau of Economic Geology, University of Texas at Austin, scale 1:250,000.

Moore, D.W. and Wermund, E.G., Jr., 1993a, Quaternary geologic map of the Austin 4 x 6 degree quadrangle, United States: U.S. Geological Survey Miscellaneous Investigations Series Map I-1420 (NH-14), scale 1:1,000,000.
[http://pubs.er.usgs.gov/publication/i1420(NH14)]

Bureau of Economic Geology, 1976, McAllen-Brownsville Sheet, Geologic Atlas of Texas, Bureau of Economic Geology, University of Texas at Austin, scale 1:250,000.

Bureau of Economic Geology, 1975, Beeville-Bay City Sheet, Geologic Atlas of Texas, Bureau of Economic Geology, University of Texas at Austin, scale 1:250,000.

Bureau of Economic Geology, 1982, Houston Sheet, Geologic Atlas of Texas, Bureau of Economic Geology, University of Texas at Austin, scale 1:250,000.

Geographic coverage Aransas - Austin - Bee - Brazoria - Calhoun - Cameron - Chambers - Colorado - Fort Bend - Galveston - Hardin - Harris - Hidalgo - Jackson - Jasper - Jefferson - Jim Wells - Kenedy - Kleberg - Liberty - Live Oak - Matagorda - Newton - Nueces - Orange - Refugio - San Patricio - Victoria - Waller - Wharton - Willacy

Show this information as [XML] - [JSON]

USGS GEOLOGIC FAULT MAP

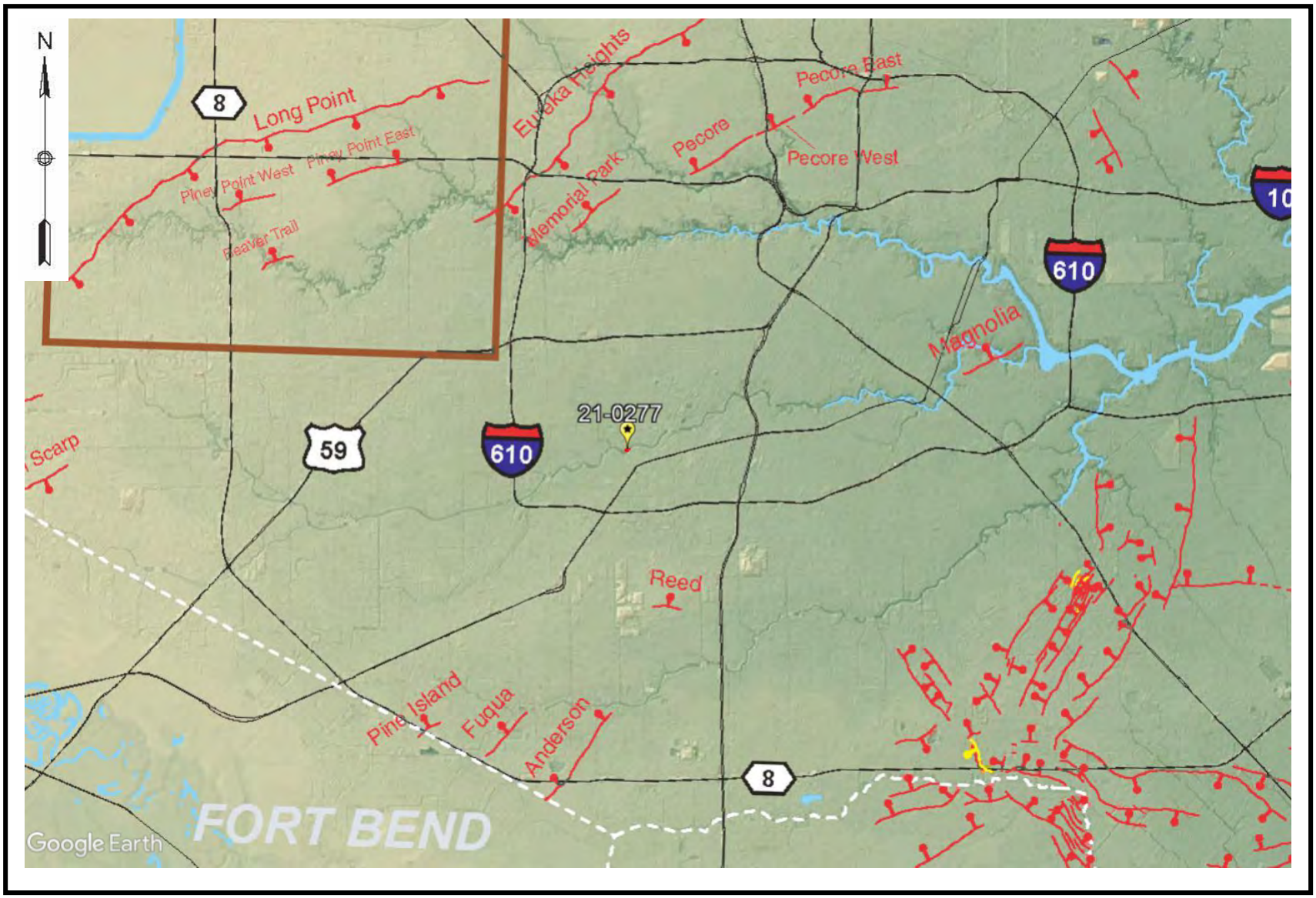

Appendix H - Unified Soil Classification System

UNIFIED SOIL CLASSIFICATION SYSTEM

UNIFIED SOIL CLASSIFICATION AND SYMBOL CHART

COARSE-GRAINED SOILS (more than 50% of material is larger than No. 200 sieve size.)			
GRAVELS More than 50% of coarse fraction larger than No. 4 sieve size	Clean Gravels (Less than 5% fines)	GW	Well-graded gravels, gravel-sand mixtures, little or no fines
		GP	Poorly-graded gravels, gravel-sand mixtures, little or no fines
	Gravels with fines (More than 12% fines)	GM	Silty gravels, gravel-sand-silt mixtures
		GC	Clayey gravels, gravel-sand-clay mixtures
SANDS 50% or more of coarse fraction smaller than No. 4 sieve size	Clean Sands (Less than 5% fines)	SW	Well-graded sands, gravelly sands, little or no fines
		SP	Poorly graded sands, gravelly sands, little or no fines
	Sands with fines (More than 12% fines)	SM	Silty sands, sand-silt mixtures
		SC	Clayey sands, sand-clay mixtures
FINE-GRAINED SOILS (50% or more of material is smaller than No. 200 sieve size.)			
SILTS AND CLAYS Liquid limit less than 50%		ML	Inorganic silts and very fine sands, rock flour, silty of clayey fine sands or clayey silts with slight plasticity
		CL	Inorganic clays of low to medium plasticity, gravelly clays, sandy clays, silty clays, lean clays
		OL	Organic silts and organic silty clays of low plasticity
SILTS AND CLAYS Liquid limit 50% or greater		MH	Inorganic silts, micaceous or diatomaceous fine sandy or silty soils, elastic silts
		CH	Inorganic clays of high plasticity, fat clays
		OH	Organic clays of medium to high plasticity, organic silts
HIGHLY ORGANIC SOILS		PT	Peat and other highly organic soils

LABORATORY CLASSIFICATION CRITERIA

GW	$C_u = \frac{D_{60}}{D_{10}}$ greater than 4; $C_c = \frac{D_{30}}{D_{10} \times D_{60}}$ between 1 and 3	
GP	Not meeting all gradation requirements for GW	
GM	Atterberg limits below "A" line or P.I. less than 4	Above "A" line with P.I. between 4 and 7 are borderline cases requiring use of dual symbols
GC	Atterberg limits above "A" line with P.I. greater than 7	
SW	$C_u = \frac{D_{60}}{D_{10}}$ greater than 4; $C_c = \frac{D_{30}}{D_{10} \times D_{60}}$ between 1 and 3	
SP	Not meeting all gradation requirements for GW	
SM	Atterberg limits below "A" line or P.I. less than 4	Limits plotting in shaded zone with P.I. between 4 and 7 are borderline cases requiring use of dual symbols.
SC	Atterberg limits above "A" line with P.I. greater than 7	

Determine percentages of sand and gravel from grain-size curve. Depending on percentage of fines (fraction smaller than No. 200 sieve size), coarse-grained soils are classified as follows:

Less than 5 percent ..... GW, GP, SW, SP
More than 12 percent ..... GM, GC, SM, SC
5 to 12 percent ..... Borderline cases requiring dual symbols

PLASTICITY CHART

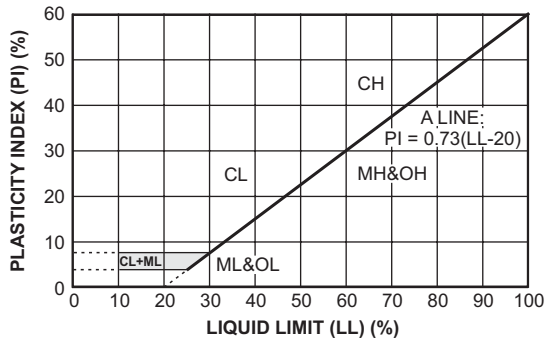

TERMS DESCRIBING SOIL CONSISTENCY

Fine Grained Soils		Coarse Grained Soils		
Description	Penetrometer Reading (tsf)	Penetration Resistance (blows/ft)	Description	Relative Density
Soft	0.0 to 1.0	0 to 4	Very Loose	0 to 20%
Firm	1.0 to 1.5	4 to 10	Loose	20 to 40%
Stiff	1.5 to 3.0	10 to 30	Medium Dense	40 to 70%
Very Stiff	3.0 to 4.5	30 to 50	Dense	70 to 90%
Hard	4.5+	Over 50	Very Dense	90 to 100%

Appendix H: Hydraulic Model Output

HEC-RAS Plan: RevEx River: D100-00-00 Reach: D100-00-00_0008

Reach	River Sta	Profile	Q Total	Min Ch El	W.S. Elev	Crit W.S.	E.G. Elev	E.G. Slope	Vel Chnl	Flow Area	Top Width	Froude # Chl
			(cfs)	(ft)	(ft)	(ft)	(ft)	(ft/ft)	(ft/s)	(sq ft)	(ft)	
D100-00-00_0008	158788	10PCT_10yr	779.00	74.62	83.00		83.10	0.000570	2.57	303.29	71.55	0.22
D100-00-00_0008	158788	2PCT_50yr	1152.00	74.62	84.88		84.98	0.000415	2.56	449.15	83.80	0.20
D100-00-00_0008	158788	1PCT_100yr	1343.00	74.62	85.45		85.57	0.000422	2.69	498.47	87.44	0.20
D100-00-00_0008	158788	0.2PCT_500yr	1871.00	74.62	86.71		86.85	0.000461	3.05	613.37	95.38	0.21
D100-00-00_0008	157812	10PCT_10yr	779.00	73.62	82.58		82.65	0.000366	2.12	366.75	83.12	0.18
D100-00-00_0008	157812	2PCT_50yr	1152.00	73.62	84.58		84.65	0.000259	2.11	546.94	96.87	0.16
D100-00-00_0008	157812	1PCT_100yr	1343.00	73.62	85.15		85.23	0.000267	2.23	603.23	100.81	0.16
D100-00-00_0008	157812	0.2PCT_500yr	1871.00	73.62	86.38		86.48	0.000302	2.56	731.93	108.92	0.17
D100-00-00_0008	157685	10PCT_10yr	779.00	73.62	82.53	78.75	82.60	0.000377	2.15	362.66	82.79	0.18
D100-00-00_0008	157685	2PCT_50yr	1152.00	73.62	84.55	79.35	84.62	0.000263	2.12	543.62	96.64	0.16
D100-00-00_0008	157685	1PCT_100yr	1343.00	73.62	85.12	79.63	85.20	0.000272	2.24	599.65	100.56	0.16
D100-00-00_0008	157685	0.2PCT_500yr	1871.00	73.62	86.34	80.27	86.44	0.000308	2.57	727.52	108.73	0.18
D100-00-00_0008	157635		Bridge									
D100-00-00_0008	157586	10PCT_10yr	779.00	73.62	82.47		82.55	0.000393	2.18	357.70	82.37	0.18
D100-00-00_0008	157586	2PCT_50yr	1152.00	73.62	84.51		84.58	0.000269	2.14	539.39	96.34	0.16
D100-00-00_0008	157586	1PCT_100yr	1343.00	73.62	85.07		85.15	0.000278	2.26	595.04	100.24	0.16
D100-00-00_0008	157586	0.2PCT_500yr	1871.00	73.62	86.29		86.39	0.000316	2.59	721.67	108.87	0.18
D100-00-00_0008	157460	10PCT_10yr	779.00	73.62	82.42		82.50	0.000406	2.20	353.37	82.01	0.19
D100-00-00_0008	157460	2PCT_50yr	1152.00	73.62	84.47		84.54	0.000274	2.15	535.99	96.09	0.16
D100-00-00_0008	157460	1PCT_100yr	1343.00	73.62	85.04		85.12	0.000283	2.27	591.38	99.99	0.16
D100-00-00_0008	157460	0.2PCT_500yr	1871.00	73.62	86.24		86.35	0.000320	2.61	717.11	108.12	0.18
D100-00-00_0008	157290	10PCT_10yr	779.00	73.62	82.35		82.43	0.000420	2.25	346.76	80.07	0.19
D100-00-00_0008	157290	2PCT_50yr	1152.00	73.62	84.42		84.50	0.000281	2.19	526.12	93.28	0.16
D100-00-00_0008	157290	1PCT_100yr	1343.00	73.62	84.98		85.07	0.000291	2.32	579.65	96.99	0.17
D100-00-00_0008	157290	0.2PCT_500yr	1871.00	73.62	86.18		86.29	0.000334	2.67	700.63	104.89	0.18
D100-00-00_0008	157089	10PCT_10yr	779.00	73.62	82.26	78.75	82.34	0.000454	2.29	339.90	80.88	0.20
D100-00-00_0008	157089	2PCT_50yr	1152.00	73.62	84.36	79.35	84.44	0.000289	2.19	525.69	95.36	0.16
D100-00-00_0008	157089	1PCT_100yr	1343.00	73.62	84.92	79.64	85.01	0.000298	2.31	580.28	99.22	0.17
D100-00-00_0008	157089	0.2PCT_500yr	1871.00	73.62	86.12	80.27	86.23	0.000339	2.66	703.30	107.44	0.18
D100-00-00_0008	157029		Bridge									
D100-00-00_0008	156970	10PCT_10yr	779.00	73.62	82.16		82.25	0.000484	2.34	332.35	80.23	0.20
D100-00-00_0008	156970	2PCT_50yr	1152.00	73.62	84.30		84.38	0.000298	2.22	519.89	94.94	0.17
D100-00-00_0008	156970	1PCT_100yr	1343.00	73.62	84.86		84.95	0.000307	2.34	573.97	98.78	0.17
D100-00-00_0008	156970	0.2PCT_500yr	1871.00	73.62	86.04		86.15	0.000350	2.69	695.29	106.93	0.19
D100-00-00_0008	156774	10PCT_10yr	779.00	73.62	82.06		82.15	0.000521	2.40	324.03	79.52	0.21
D100-00-00_0008	156774	2PCT_50yr	1152.00	73.62	84.24		84.32	0.000308	2.24	514.06	94.51	0.17
D100-00-00_0008	156774	1PCT_100yr	1343.00	73.62	84.80		84.88	0.000317	2.37	567.72	98.34	0.17
D100-00-00_0008	156774	0.2PCT_500yr	1871.00	73.62	85.97		86.08	0.000361	2.72	687.54	106.43	0.19
D100-00-00_0008	156015	10PCT_10yr	1018.00	70.50	81.88		81.93	0.000178	1.83	556.28	91.73	0.13
D100-00-00_0008	156015	2PCT_50yr	1507.00	70.50	84.10		84.16	0.000158	1.94	776.20	107.47	0.13
D100-00-00_0008	156015	1PCT_100yr	1757.00	70.50	84.64		84.71	0.000179	2.10	835.76	122.49	0.14
D100-00-00_0008	156015	0.2PCT_500yr	2444.00	70.50	85.76		85.86	0.000239	2.52	968.47	202.38	0.16
D100-00-00_0008	155693	10PCT_10yr	1018.00	70.47	81.82		81.88	0.000189	1.94	524.96	81.58	0.13
D100-00-00_0008	155693	2PCT_50yr	1507.00	70.47	84.03		84.10	0.000177	2.09	719.83	94.99	0.13
D100-00-00_0008	155693	1PCT_100yr	1757.00	70.47	84.57		84.65	0.000201	2.28	771.33	98.83	0.14
D100-00-00_0008	155693	0.2PCT_500yr	2444.00	70.47	85.66		85.78	0.000273	2.77	883.90	528.55	0.17
D100-00-00_0008	155602	10PCT_10yr	1018.00	70.47	81.80	75.37	81.86	0.000190	1.94	523.51	81.48	0.14
D100-00-00_0008	155602	2PCT_50yr	1507.00	70.47	84.02	76.17	84.09	0.000178	2.10	718.25	94.87	0.13
D100-00-00_0008	155602	1PCT_100yr	1757.00	70.47	84.55	76.54	84.63	0.000202	2.28	769.46	311.44	0.14
D100-00-00_0008	155602	0.2PCT_500yr	2444.00	70.47	85.63	77.42	85.75	0.000276	2.77	881.11	818.65	0.17
D100-00-00_0008	155578		Bridge									
D100-00-00_0008	155557	10PCT_10yr	1018.00	70.47	81.77		81.83	0.000193	1.95	521.43	81.34	0.14
D100-00-00_0008	155557	2PCT_50yr	1507.00	70.47	84.00		84.07	0.000179	2.10	716.48	94.73	0.13
D100-00-00_0008	155557	1PCT_100yr	1757.00	70.47	84.50		84.58	0.000206	2.30	764.89	177.52	0.15
D100-00-00_0008	155557	0.2PCT_500yr	2444.00	70.47	85.52		85.64	0.000286	2.81	868.48	965.15	0.17
D100-00-00_0008	155467	10PCT_10yr	1018.00	70.47	81.76		81.82	0.000194	1.96	520.00	81.24	0.14
D100-00-00_0008	155467	2PCT_50yr	1507.00	70.47	83.98		84.05	0.000180	2.11	714.93	94.61	0.14
D100-00-00_0008	155467	1PCT_100yr	1757.00	70.47	84.48		84.56	0.000207	2.30	763.03	184.92	0.15
D100-00-00_0008	155467	0.2PCT_500yr	2444.00	70.47	85.49		85.61	0.000288	2.82	865.68	308.76	0.17
D100-00-00_0008	155083	10PCT_10yr	1018.00	69.68	81.71		81.75	0.000136	1.66	612.86	95.98	0.12
D100-00-00_0008	155083	2PCT_50yr	1507.00	69.68	83.94		83.99	0.000130	1.77	850.15	147.83	0.12
D100-00-00_0008	155083	1PCT_100yr	1757.00	69.68	84.43		84.49	0.000147	1.93	909.17	400.48	0.12
D100-00-00_0008	155083	0.2PCT_500yr	2444.00	69.68	85.43		85.51	0.000193	2.37	1054.45	988.43	0.14

HEC-RAS Plan: RevEx River: D100-00-00 Reach: D100-00-00_0008 (Continued)

Reach	River Sta	Profile	Q Total	Min Ch El	W.S. Elev	Crit W.S.	E.G. Elev	E.G. Slope	Vel Chnl	Flow Area	Top Width	Froude # Chl
			(cfs)	(ft)	(ft)	(ft)	(ft)	(ft/ft)	(ft/s)	(sq ft)	(ft)	
D100-00-00_0008	154854	10PCT_10yr	1533.00	67.44	81.64		81.71	0.000206	2.13	720.93	107.56	0.14
D100-00-00_0008	154854	2PCT_50yr	2277.00	67.44	83.86		83.94	0.000206	2.33	1012.62	443.81	0.15
D100-00-00_0008	154854	1PCT_100yr	2659.00	67.44	84.34		84.44	0.000239	2.55	1097.29	752.19	0.16
D100-00-00_0008	154854	0.2PCT_500yr	3684.00	67.44	85.29		85.45	0.000334	3.13	1287.81	2426.17	0.19
D100-00-00_0008	153809	10PCT_10yr	1533.00	68.16	81.54		81.57	0.000076	1.49	1029.66	127.82	0.09
D100-00-00_0008	153809	2PCT_50yr	2277.00	68.16	83.76		83.81	0.000078	1.74	1387.08	1975.01	0.09
D100-00-00_0008	153809	1PCT_100yr	2659.00	68.16	84.22		84.28	0.000091	1.94	1519.73	2243.81	0.10
D100-00-00_0008	153809	0.2PCT_500yr	3684.00	68.16	85.13		85.22	0.000130	2.44	1839.86	3152.87	0.13
D100-00-00_0008	153068	10PCT_10yr	2439.00	68.05	81.39		81.47	0.000200	2.35	1038.06	128.93	0.15
D100-00-00_0008	153068	2PCT_50yr	3636.00	68.05	83.59		83.70	0.000225	2.64	1675.04	1965.39	0.16
D100-00-00_0008	153068	1PCT_100yr	4250.00	68.05	84.03		84.15	0.000264	2.88	1988.74	2781.98	0.17
D100-00-00_0008	153068	0.2PCT_500yr	5865.00	68.05	84.88		85.05	0.000340	3.43	2657.19	3386.67	0.20
D100-00-00_0008	152474	10PCT_10yr	2439.00	67.80	81.14		81.29	0.000463	3.17	768.39	236.25	0.22
D100-00-00_0008	152474	2PCT_50yr	3636.00	67.80	83.32		83.50	0.000520	3.41	1197.82	1890.12	0.23
D100-00-00_0008	152474	1PCT_100yr	4250.00	67.80	83.70		83.92	0.000613	3.74	1326.75	2233.99	0.25
D100-00-00_0008	152474	0.2PCT_500yr	5865.00	67.80	84.42		84.73	0.000825	4.59	1703.14	3036.90	0.30
D100-00-00_0008	152382	10PCT_10yr	2439.00	67.80	81.09	75.04	81.25	0.000472	3.20	763.11	371.55	0.22
D100-00-00_0008	152382	2PCT_50yr	3636.00	67.80	83.30	76.29	83.44	0.000384	3.17	1967.32	2462.93	0.20
D100-00-00_0008	152382	1PCT_100yr	4250.00	67.80	83.69	76.83	83.84	0.000399	3.35	2461.43	2669.05	0.21
D100-00-00_0008	152382	0.2PCT_500yr	5865.00	67.80	84.44	78.05	84.61	0.000447	3.76	3477.63	2938.84	0.22
D100-00-00_0008	152299		Bridge									
D100-00-00_0008	152189	10PCT_10yr	2439.00	67.80	80.75		80.93	0.000543	3.37	724.47	163.60	0.23
D100-00-00_0008	152189	2PCT_50yr	3636.00	67.80	82.62		82.82	0.000500	3.68	1395.74	1714.07	0.23
D100-00-00_0008	152189	1PCT_100yr	4250.00	67.80	82.93		83.17	0.000570	4.04	1682.11	2198.68	0.25
D100-00-00_0008	152189	0.2PCT_500yr	5865.00	67.80	83.85		84.10	0.000588	4.40	2858.21	3353.74	0.26
D100-00-00_0008	152131	10PCT_10yr	2439.00	67.80	80.72		80.89	0.000551	3.38	720.79	132.32	0.24
D100-00-00_0008	152131	2PCT_50yr	3636.00	67.80	82.57		82.78	0.000533	3.78	1202.89	1011.33	0.24
D100-00-00_0008	152131	1PCT_100yr	4250.00	67.80	82.86		83.12	0.000627	4.20	1426.25	1521.42	0.26
D100-00-00_0008	152131	0.2PCT_500yr	5865.00	67.80	83.74		84.04	0.000690	4.72	2486.69	2968.58	0.28
D100-00-00_0008	151046	10PCT_10yr	2832.00	66.74	80.18		80.36	0.000450	3.36	853.10	181.13	0.22
D100-00-00_0008	151046	2PCT_50yr	4199.00	66.74	82.09		82.26	0.000423	3.45	2207.88	2493.04	0.21
D100-00-00_0008	151046	1PCT_100yr	4529.00	66.74	82.40		82.55	0.000407	3.43	2655.49	3000.36	0.21
D100-00-00_0008	151046	0.2PCT_500yr	5807.00	66.74	83.35		83.48	0.000347	3.39	4522.59	4640.42	0.20
D100-00-00_0008	150303	10PCT_10yr	2832.00	66.66	79.76		79.98	0.000564	3.77	752.03	99.22	0.24
D100-00-00_0008	150303	2PCT_50yr	4199.00	66.66	81.69		81.91	0.000503	3.96	2217.95	2506.82	0.23
D100-00-00_0008	150303	1PCT_100yr	4529.00	66.66	82.04		82.23	0.000443	3.79	2909.15	3016.00	0.22
D100-00-00_0008	150303	0.2PCT_500yr	5807.00	66.66	83.11		83.22	0.000302	3.35	5264.42	4194.76	0.19
D100-00-00_0008	149340	10PCT_10yr	2832.00	66.67	79.25		79.44	0.000541	3.46	819.44	121.93	0.24
D100-00-00_0008	149340	2PCT_50yr	4199.00	66.67	81.23		81.42	0.000491	3.65	1850.27	1445.27	0.23
D100-00-00_0008	149340	1PCT_100yr	4529.00	66.67	81.63		81.81	0.000430	3.53	2447.11	1852.33	0.22
D100-00-00_0008	149340	0.2PCT_500yr	5807.00	66.67	82.83		82.94	0.000286	3.15	4829.46	4333.37	0.18
D100-00-00_0008	148557	10PCT_10yr	2832.00	65.79	78.84		79.03	0.000512	3.49	815.20	152.65	0.23
D100-00-00_0008	148557	2PCT_50yr	4199.00	65.79	80.89		81.08	0.000416	3.63	2015.37	1663.64	0.21
D100-00-00_0008	148557	1PCT_100yr	4529.00	65.79	81.34		81.51	0.000375	3.57	2852.95	2795.27	0.21
D100-00-00_0008	148557	0.2PCT_500yr	5807.00	65.79	82.69		82.77	0.000208	2.90	6323.44	4577.35	0.16
D100-00-00_0008	148121	10PCT_10yr	2832.00	64.70	78.64		78.82	0.000429	3.44	838.94	162.52	0.21
D100-00-00_0008	148121	2PCT_50yr	4199.00	64.70	80.70		80.90	0.000382	3.77	1873.22	1094.87	0.21
D100-00-00_0008	148121	1PCT_100yr	4529.00	64.70	81.17		81.35	0.000345	3.69	2502.51	1973.85	0.20
D100-00-00_0008	148121	0.2PCT_500yr	5807.00	64.70	82.58		82.68	0.000211	3.14	6095.92	3517.28	0.16
D100-00-00_0008	147722	10PCT_10yr	2832.00	64.95	78.35		78.60	0.000678	3.99	709.23	98.35	0.26
D100-00-00_0008	147722	2PCT_50yr	4199.00	64.95	80.42		80.71	0.000623	4.36	1374.77	1111.85	0.26
D100-00-00_0008	147722	1PCT_100yr	4529.00	64.95	80.93		81.18	0.000545	4.21	2027.16	1798.03	0.24
D100-00-00_0008	147722	0.2PCT_500yr	5807.00	64.95	82.47		82.58	0.000278	3.34	5760.85	3901.00	0.18
D100-00-00_0008	147287	10PCT_10yr	2832.00	63.18	78.15		78.34	0.000457	3.51	807.04	100.65	0.22
D100-00-00_0008	147287	2PCT_50yr	4199.00	63.18	80.22		80.45	0.000496	3.95	1566.06	2493.95	0.23
D100-00-00_0008	147287	1PCT_100yr	4529.00	63.18	80.76		80.95	0.000408	3.72	2435.94	2966.04	0.21
D100-00-00_0008	147287	0.2PCT_500yr	5807.00	63.18	82.37		82.46	0.000209	2.96	5605.15	3239.98	0.16
D100-00-00_0008	146862	10PCT_10yr	2832.00	63.71	78.12		78.20	0.000160	2.31	1225.64	374.54	0.13
D100-00-00_0008	146862	2PCT_50yr	4199.00	63.71	80.20		80.30	0.000162	2.60	2677.56	2808.97	0.14
D100-00-00_0008	146862	1PCT_100yr	4529.00	63.71	80.74		80.83	0.000143	2.52	3583.51	3107.35	0.13
D100-00-00_0008	146862	0.2PCT_500yr	5807.00	63.71	82.34		82.40	0.000098	2.28	6647.87	3488.66	0.11
D100-00-00_0008	145942	10PCT_10yr	2832.00	63.70	77.89		78.02	0.000262	2.82	1003.64	221.61	0.17
D100-00-00_0008	145942	2PCT_50yr	4199.00	63.70	79.99		80.12	0.000238	3.00	2543.84	2662.59	0.17
D100-00-00_0008	145942	1PCT_100yr	4529.00	63.70	80.56		80.67	0.000202	2.87	3285.01	3155.54	0.15
D100-00-00_0008	145942	0.2PCT_500yr	5807.00	63.70	82.22		82.29	0.000128	2.51	5901.41	3433.27	0.13

HEC-RAS Plan: RevEx River: D100-00-00 Reach: D100-00-00_0008 (Continued)

Reach	River Sta	Profile	Q Total	Min Ch El	W.S. Elev	Crit W.S.	E.G. Elev	E.G. Slope	Vel Chnl	Flow Area	Top Width	Froude # Chl
			(cfs)	(ft)	(ft)	(ft)	(ft)	(ft/ft)	(ft/s)	(sq ft)	(ft)	
D100-00-00_0008	145831	10PCT_10yr	2832.00	63.70	77.86	69.52	77.98	0.000285	2.81	1069.44	1581.29	0.17
D100-00-00_0008	145831	2PCT_50yr	4199.00	63.70	79.98	70.81	80.07	0.000247	2.61	3257.63	3204.75	0.16
D100-00-00_0008	145831	1PCT_100yr	4529.00	63.70	80.56	71.07	80.63	0.000191	2.41	4081.35	3252.56	0.15
D100-00-00_0008	145831	0.2PCT_500yr	5807.00	63.70	82.22	72.06	82.27	0.000113	2.09	6461.06	3402.76	0.12
D100-00-00_0008	145781		Bridge									
D100-00-00_0008	145732	10PCT_10yr	2832.00	63.70	77.81		77.93	0.000267	2.84	1033.55	396.94	0.17
D100-00-00_0008	145732	2PCT_50yr	4199.00	63.70	79.84		79.96	0.000242	3.00	2656.38	3126.85	0.17
D100-00-00_0008	145732	1PCT_100yr	4529.00	63.70	80.43		80.53	0.000198	2.82	3410.96	3315.19	0.15
D100-00-00_0008	145732	0.2PCT_500yr	5807.00	63.70	82.13		82.20	0.000129	2.51	5570.16	3421.55	0.13
D100-00-00_0008	145620	10PCT_10yr	2832.00	63.70	77.78		77.90	0.000268	2.85	1054.65	1106.24	0.17
D100-00-00_0008	145620	2PCT_50yr	4199.00	63.70	79.77		79.92	0.000282	3.22	1826.84	2865.50	0.18
D100-00-00_0008	145620	1PCT_100yr	4529.00	63.70	80.35		80.50	0.000255	3.18	2201.42	3023.35	0.17
D100-00-00_0008	145620	0.2PCT_500yr	5807.00	63.70	82.04		82.16	0.000199	3.10	3658.38	3443.89	0.16
D100-00-00_0008	145210	10PCT_10yr	2832.00	62.73	77.71		77.80	0.000198	2.29	1234.24	757.11	0.14
D100-00-00_0008	145210	2PCT_50yr	4199.00	62.73	79.70		79.81	0.000206	2.68	1735.83	3327.27	0.15
D100-00-00_0008	145210	1PCT_100yr	4529.00	62.73	80.29		80.40	0.000191	2.68	2019.99	3504.49	0.15
D100-00-00_0008	145210	0.2PCT_500yr	5807.00	62.73	81.97		82.09	0.000169	2.80	2841.43	3545.58	0.14
D100-00-00_0008	144189	10PCT_10yr	2832.00	63.79	77.49		77.59	0.000199	2.50	1157.63	446.60	0.15
D100-00-00_0008	144189	2PCT_50yr	4199.00	63.79	79.46		79.59	0.000218	2.99	1555.62	1962.68	0.16
D100-00-00_0008	144189	1PCT_100yr	4529.00	63.79	80.05		80.19	0.000211	3.05	1704.83	2521.08	0.16
D100-00-00_0008	144189	0.2PCT_500yr	5807.00	63.79	81.73		81.89	0.000204	3.30	2248.18	2877.09	0.16
D100-00-00_0008	143314	10PCT_10yr	2832.00	61.60	77.14		77.32	0.000512	3.38	838.90	584.12	0.23
D100-00-00_0008	143314	2PCT_50yr	4199.00	61.60	79.08		79.31	0.000498	3.88	1170.46	3029.69	0.23
D100-00-00_0008	143314	1PCT_100yr	4529.00	61.60	79.68		79.92	0.000458	3.89	1308.32	3172.88	0.22
D100-00-00_0008	143314	0.2PCT_500yr	5807.00	61.60	81.38		81.64	0.000415	4.14	1716.62	3224.40	0.22
D100-00-00_0008	143131	10PCT_10yr	2832.00	63.24	77.06		77.22	0.000490	3.25	871.99	438.89	0.22
D100-00-00_0008	143131	2PCT_50yr	4199.00	63.24	79.01		79.21	0.000476	3.65	1269.15	3007.13	0.23
D100-00-00_0008	143131	1PCT_100yr	4529.00	63.24	79.62		79.83	0.000426	3.63	1444.06	3322.74	0.22
D100-00-00_0008	143131	0.2PCT_500yr	5807.00	63.24	81.34		81.55	0.000366	3.79	1931.99	3376.88	0.21
D100-00-00_0008	142998	10PCT_10yr	2832.00	63.24	76.98	70.01	77.16	0.000465	3.34	856.51	919.36	0.22
D100-00-00_0008	142998	2PCT_50yr	4199.00	63.24	78.92	71.38	79.14	0.000519	3.79	1211.71	3225.17	0.24
D100-00-00_0008	142998	1PCT_100yr	4529.00	63.24	79.54	71.68	79.76	0.000465	3.77	1356.18	3398.04	0.23
D100-00-00_0008	142998	0.2PCT_500yr	5807.00	63.24	81.26	72.75	81.49	0.000404	3.96	1751.76	3468.03	0.22
D100-00-00_0008	142979		Bridge									
D100-00-00_0008	142960	10PCT_10yr	2832.00	63.24	76.93		77.11	0.000460	3.38	838.32	1030.51	0.22
D100-00-00_0008	142960	2PCT_50yr	4199.00	63.24	78.64		78.90	0.000576	4.02	1046.66	3019.07	0.25
D100-00-00_0008	142960	1PCT_100yr	4529.00	63.24	79.19		79.45	0.000559	4.05	1140.01	3277.07	0.25
D100-00-00_0008	142960	0.2PCT_500yr	5807.00	63.24	80.57		80.87	0.000544	4.43	1451.31	3423.00	0.25
D100-00-00_0008	142768	10PCT_10yr	2832.00	62.59	76.85		77.02	0.000442	3.22	887.44	622.82	0.21
D100-00-00_0008	142768	2PCT_50yr	4199.00	62.59	78.56		78.78	0.000467	3.80	1317.00	2954.22	0.23
D100-00-00_0008	142768	1PCT_100yr	4529.00	62.59	79.12		79.34	0.000430	3.80	1539.19	3347.44	0.22
D100-00-00_0008	142768	0.2PCT_500yr	5807.00	62.59	80.51		80.75	0.000411	4.07	2096.51	3724.48	0.22
D100-00-00_0008	141778	10PCT_10yr	2821.00	63.46	76.35		76.53	0.000540	3.37	838.74	742.92	0.23
D100-00-00_0008	141778	2PCT_50yr	3821.00	63.46	78.23		78.36	0.000357	3.06	2640.30	3473.94	0.19
D100-00-00_0008	141778	1PCT_100yr	4171.00	63.46	78.86		78.97	0.000286	2.88	3409.00	3760.24	0.18
D100-00-00_0008	141778	0.2PCT_500yr	5486.00	63.46	80.35		80.43	0.000213	2.77	5225.27	3849.68	0.16
D100-00-00_0008	140678	10PCT_10yr	2821.00	61.41	75.83		76.00	0.000436	3.25	871.45	586.86	0.21
D100-00-00_0008	140678	2PCT_50yr	3821.00	61.41	77.88		78.02	0.000291	3.07	2510.26	3203.80	0.18
D100-00-00_0008	140678	1PCT_100yr	4171.00	61.41	78.59		78.70	0.000236	2.91	3269.80	3381.84	0.16
D100-00-00_0008	140678	0.2PCT_500yr	5486.00	61.41	80.14		80.23	0.000191	2.89	4945.56	3665.60	0.15
D100-00-00_0008	139663	10PCT_10yr	2821.00	59.55	75.62		75.71	0.000175	2.34	1206.16	315.01	0.14
D100-00-00_0008	139663	2PCT_50yr	3821.00	59.55	77.69		77.79	0.000162	2.55	1732.72	2801.28	0.14
D100-00-00_0008	139663	1PCT_100yr	4171.00	59.55	78.41		78.51	0.000151	2.57	2230.74	3240.94	0.13
D100-00-00_0008	139663	0.2PCT_500yr	5486.00	59.55	79.95		80.06	0.000152	2.80	3375.85	3618.36	0.14
D100-00-00_0008	138994	10PCT_10yr	2821.00	61.47	75.43		75.56	0.000275	2.86	992.57	497.13	0.17
D100-00-00_0008	138994	2PCT_50yr	3821.00	61.47	77.51		77.66	0.000239	3.06	1524.85	6088.39	0.17
D100-00-00_0008	138994	1PCT_100yr	4171.00	61.47	78.24		78.38	0.000221	3.07	1813.45	6899.35	0.16
D100-00-00_0008	138994	0.2PCT_500yr	5486.00	61.47	79.77		79.93	0.000231	3.42	2462.17	7599.76	0.17
D100-00-00_0008	138693	10PCT_10yr	2821.00	63.82	75.30		75.45	0.000457	3.11	905.77	629.44	0.22
D100-00-00_0008	138693	2PCT_50yr	3821.00	63.82	77.43		77.57	0.000381	3.03	1372.55	6887.21	0.20
D100-00-00_0008	138693	1PCT_100yr	4171.00	63.82	78.17		78.30	0.000322	2.98	1573.57	7490.14	0.19
D100-00-00_0008	138693	0.2PCT_500yr	5486.00	63.82	79.70		79.85	0.000297	3.23	2032.03	7614.16	0.19
D100-00-00_0008	138375	10PCT_10yr	2821.00	61.10	75.25		75.34	0.000192	2.43	1159.64	1629.07	0.15

HEC-RAS Plan: RevEx River: D100-00-00 Reach: D100-00-00_0008 (Continued)

Reach	River Sta	Profile	Q Total	Min Ch El	W.S. Elev	Crit W.S.	E.G. Elev	E.G. Slope	Vel Chnl	Flow Area	Top Width	Froude # Chl
			(cfs)	(ft)	(ft)	(ft)	(ft)	(ft/ft)	(ft/s)	(sq ft)	(ft)	
D100-00-00_0008	138375	2PCT_50yr	3821.00	61.10	77.37		77.48	0.000183	2.57	1610.58	6638.95	0.15
D100-00-00_0008	138375	1PCT_100yr	4171.00	61.10	78.12		78.22	0.000166	2.58	1858.91	7444.32	0.14
D100-00-00_0008	138375	0.2PCT_500yr	5486.00	61.10	79.65		79.77	0.000171	2.87	2368.78	7531.88	0.15
D100-00-00_0008	138243	10PCT_10yr	2821.00	61.10	75.22	66.42	75.32	0.000183	2.44	1154.75	1293.73	0.14
D100-00-00_0008	138243	2PCT_50yr	3821.00	61.10	77.34	67.30	77.45	0.000197	2.65	1441.64	6558.99	0.15
D100-00-00_0008	138243	1PCT_100yr	4171.00	61.10	78.08	67.57	78.19	0.000194	2.68	1557.57	6975.37	0.15
D100-00-00_0008	138243	0.2PCT_500yr	5486.00	61.10	79.60	68.52	79.74	0.000205	3.03	1985.81	7323.89	0.16
D100-00-00_0008	138189		Bridge									
D100-00-00_0008	138115	10PCT_10yr	2821.00	61.10	75.18		75.27	0.000186	2.45	1149.21	765.81	0.14
D100-00-00_0008	138115	2PCT_50yr	3821.00	61.10	77.24		77.35	0.000180	2.69	1437.62	5689.65	0.15
D100-00-00_0008	138115	1PCT_100yr	4171.00	61.10	77.95		78.07	0.000171	2.74	1608.00	6599.03	0.14
D100-00-00_0008	138115	0.2PCT_500yr	5486.00	61.10	79.34		79.49	0.000192	3.13	2114.71	7207.51	0.15
D100-00-00_0008	138012	10PCT_10yr	4910.00	61.10	74.87		75.17	0.000619	4.42	1110.03	232.02	0.26
D100-00-00_0008	138012	2PCT_50yr	6379.00	61.10	76.92		77.25	0.000626	4.61	1402.58	3486.61	0.27
D100-00-00_0008	138012	1PCT_100yr	6957.00	61.10	77.63		77.97	0.000633	4.64	1564.63	4257.27	0.27
D100-00-00_0008	138012	0.2PCT_500yr	8385.00	61.10	79.06		79.40	0.000566	4.74	2029.60	7021.61	0.26
D100-00-00_0008	137572	10PCT_10yr	4910.00	60.26	74.78		74.95	0.000303	3.30	1489.60	162.26	0.19
D100-00-00_0008	137572	2PCT_50yr	6379.00	60.26	76.84		77.03	0.000290	3.50	1843.59	3824.67	0.19
D100-00-00_0008	137572	1PCT_100yr	6957.00	60.26	77.55		77.75	0.000281	3.58	2015.93	3995.03	0.18
D100-00-00_0008	137572	0.2PCT_500yr	8385.00	60.26	78.98		79.20	0.000272	3.80	2413.49	4816.54	0.19
D100-00-00_0008	136680	10PCT_10yr	4910.00	59.59	74.47		74.66	0.000333	3.53	1392.43	138.42	0.20
D100-00-00_0008	136680	2PCT_50yr	6379.00	59.59	76.52		76.74	0.000343	3.77	1693.37	221.77	0.20
D100-00-00_0008	136680	1PCT_100yr	6957.00	59.59	77.23		77.46	0.000356	3.85	1807.40	514.22	0.21
D100-00-00_0008	136680	0.2PCT_500yr	8385.00	59.59	78.66		78.92	0.000351	4.08	2108.53	2280.15	0.21
D100-00-00_0008	135282	10PCT_10yr	5293.00	58.44	74.00		74.20	0.000330	3.58	1480.24	142.99	0.20
D100-00-00_0008	135282	2PCT_50yr	6527.00	58.44	76.09		76.29	0.000297	3.64	1791.91	575.19	0.19
D100-00-00_0008	135282	1PCT_100yr	7133.00	58.44	76.77		76.99	0.000318	3.75	1901.56	747.60	0.20
D100-00-00_0008	135282	0.2PCT_500yr	8564.00	58.44	78.19		78.44	0.000333	3.96	2360.58	5401.66	0.20
D100-00-00_0008	134682	10PCT_10yr	5293.00	58.88	73.96		74.03	0.000154	2.37	3473.78	2063.90	0.13
D100-00-00_0008	134682	2PCT_50yr	6527.00	58.88	76.08		76.14	0.000128	2.35	4562.17	3152.84	0.12
D100-00-00_0008	134682	1PCT_100yr	7133.00	58.88	76.77		76.83	0.000122	2.36	4964.38	4283.58	0.12
D100-00-00_0008	134682	0.2PCT_500yr	8564.00	58.88	78.21		78.28	0.000110	2.44	5835.21	4986.97	0.12
D100-00-00_0008	134321	10PCT_10yr	5293.00	57.63	73.78		73.94	0.000294	3.36	2157.15	2040.77	0.19
D100-00-00_0008	134321	2PCT_50yr	6527.00	57.63	75.95		76.07	0.000230	3.09	3235.57	2864.44	0.17
D100-00-00_0008	134321	1PCT_100yr	7133.00	57.63	76.64		76.77	0.000219	3.09	3653.08	3598.44	0.16
D100-00-00_0008	134321	0.2PCT_500yr	8564.00	57.63	78.11		78.22	0.000199	3.05	4541.40	4226.16	0.16
D100-00-00_0008	134169	10PCT_10yr	5293.00	57.63	73.67	64.58	73.88	0.000349	3.65	1449.46	142.06	0.20
D100-00-00_0008	134169	2PCT_50yr	6527.00	57.63	75.79	65.42	76.01	0.000322	3.69	1807.60	1229.04	0.20
D100-00-00_0008	134169	1PCT_100yr	7133.00	57.63	76.49	65.80	76.70	0.000318	3.74	2231.00	3128.63	0.20
D100-00-00_0008	134169	0.2PCT_500yr	8564.00	57.63	77.96	66.63	78.16	0.000294	3.73	3276.21	5700.75	0.19
D100-00-00_0008	134151		Bridge									
D100-00-00_0008	134134	10PCT_10yr	5293.00	57.63	73.62		73.83	0.000354	3.67	1441.77	141.72	0.20
D100-00-00_0008	134134	2PCT_50yr	6527.00	57.63	75.70		75.92	0.000333	3.71	1848.29	2775.44	0.20
D100-00-00_0008	134134	1PCT_100yr	7133.00	57.63	76.35		76.56	0.000338	3.78	2222.99	4323.69	0.20
D100-00-00_0008	134134	0.2PCT_500yr	8564.00	57.63	77.67		77.88	0.000313	3.82	3185.91	5970.70	0.20
D100-00-00_0008	133893	10PCT_10yr	5293.00	57.63	73.53		73.74	0.000363	3.70	1428.86	145.70	0.21
D100-00-00_0008	133893	2PCT_50yr	6527.00	57.63	75.62		75.84	0.000321	3.74	1839.02	2324.10	0.20
D100-00-00_0008	133893	1PCT_100yr	7133.00	57.63	76.26		76.48	0.000324	3.84	2062.41	4695.45	0.20
D100-00-00_0008	133893	0.2PCT_500yr	8564.00	57.63	77.55		77.80	0.000314	4.05	2701.63	5501.41	0.20
D100-00-00_0008	132822	10PCT_10yr	5293.00	54.21	73.12		73.33	0.000402	3.76	1747.56	772.43	0.21
D100-00-00_0008	132822	2PCT_50yr	6527.00	54.21	75.30		75.48	0.000320	3.60	2633.41	1421.93	0.19
D100-00-00_0008	132822	1PCT_100yr	7133.00	54.21	75.94		76.13	0.000315	3.65	2986.57	1865.80	0.19
D100-00-00_0008	132822	0.2PCT_500yr	8564.00	54.21	77.26		77.45	0.000299	3.73	4096.97	3439.05	0.19
D100-00-00_0008	131846	10PCT_10yr	5293.00	55.05	72.79		72.99	0.000309	3.58	1478.75	863.04	0.19
D100-00-00_0008	131846	2PCT_50yr	6527.00	55.05	74.98		75.19	0.000281	3.63	2017.89	2607.75	0.18
D100-00-00_0008	131846	1PCT_100yr	7133.00	55.05	75.62		75.83	0.000289	3.74	2272.22	3937.51	0.19
D100-00-00_0008	131846	0.2PCT_500yr	8564.00	55.05	76.92		77.15	0.000307	3.96	2998.87	5343.74	0.19
D100-00-00_0008	130903	10PCT_10yr	5293.00	55.51	72.36		72.61	0.000515	3.97	1337.08	162.78	0.24
D100-00-00_0008	130903	2PCT_50yr	6527.00	55.51	74.65		74.87	0.000398	3.82	1811.70	1685.30	0.21
D100-00-00_0008	130903	1PCT_100yr	7133.00	55.51	75.28		75.51	0.000391	3.88	2071.81	3858.12	0.21
D100-00-00_0008	130903	0.2PCT_500yr	8564.00	55.51	76.60		76.84	0.000365	4.00	2815.61	5679.82	0.21
D100-00-00_0008	130648	10PCT_10yr	5293.00	55.95	72.13	64.88	72.44	0.000652	4.48	1180.74	135.19	0.27
D100-00-00_0008	130648	2PCT_50yr	6527.00	55.95	74.45	65.81	74.74	0.000510	4.31	1525.28	3690.10	0.24
D100-00-00_0008	130648	1PCT_100yr	7133.00	55.95	75.08	66.22	75.38	0.000519	4.41	1682.93	4758.28	0.24

HEC-RAS Plan: RevEx River: D100-00-00 Reach: D100-00-00_0008 (Continued)

Reach	River Sta	Profile	Q Total	Min Ch El	W.S. Elev	Crit W.S.	E.G. Elev	E.G. Slope	Vel Chnl	Flow Area	Top Width	Froude # Chl
			(cfs)	(ft)	(ft)	(ft)	(ft)	(ft/ft)	(ft/s)	(sq ft)	(ft)	
D100-00-00_0008	130648	0.2PCT_500yr	8564.00	55.95	76.38	67.10	76.70	0.000492	4.61	2253.74	6045.29	0.24
D100-00-00_0008	130611		Bridge									
D100-00-00_0008	130574	10PCT_10yr	5293.00	55.95	71.99		72.31	0.000681	4.56	1161.73	134.08	0.27
D100-00-00_0008	130574	2PCT_50yr	6527.00	55.95	74.34		74.63	0.000526	4.36	1498.06	2550.44	0.25
D100-00-00_0008	130574	1PCT_100yr	7133.00	55.95	74.96		75.27	0.000533	4.47	1600.28	5088.12	0.25
D100-00-00_0008	130574	0.2PCT_500yr	8564.00	55.95	76.11		76.46	0.000567	4.78	1997.18	6574.11	0.26
D100-00-00_0008	130416	10PCT_10yr	5293.00	55.95	71.87		72.20	0.000707	4.62	1145.43	153.82	0.28
D100-00-00_0008	130416	2PCT_50yr	6527.00	55.95	74.25		74.55	0.000539	4.40	1503.84	2103.22	0.25
D100-00-00_0008	130416	1PCT_100yr	7133.00	55.95	74.87		75.18	0.000543	4.50	1651.51	4353.06	0.25
D100-00-00_0008	130416	0.2PCT_500yr	8564.00	55.95	76.02		76.37	0.000537	4.79	2168.26	6871.40	0.25
D100-00-00_0008	130170	10PCT_10yr	5293.00	53.70	71.78		72.04	0.000462	4.04	1310.67	133.75	0.23
D100-00-00_0008	130170	2PCT_50yr	6527.00	53.70	74.18		74.42	0.000383	3.95	1682.21	2642.13	0.21
D100-00-00_0008	130170	1PCT_100yr	7133.00	53.70	74.80		75.05	0.000393	4.07	1840.47	4655.82	0.21
D100-00-00_0008	130170	0.2PCT_500yr	8564.00	53.70	75.94		76.24	0.000429	4.38	2277.55	6620.76	0.23
D100-00-00_0008	129484	10PCT_10yr	5293.00	53.89	71.51		71.73	0.000399	3.79	1397.52	213.24	0.21
D100-00-00_0008	129484	2PCT_50yr	6527.00	53.89	73.95		74.17	0.000327	3.70	1797.91	2432.06	0.20
D100-00-00_0008	129484	1PCT_100yr	7133.00	53.89	74.56		74.79	0.000346	3.82	1922.31	3863.18	0.20
D100-00-00_0008	129484	0.2PCT_500yr	8564.00	53.89	75.68		75.94	0.000400	4.14	2169.23	6544.94	0.22
D100-00-00_0008	129251	10PCT_10yr	5293.00	53.77	71.36		71.63	0.000505	4.15	1276.67	221.32	0.24
D100-00-00_0008	129251	2PCT_50yr	6527.00	53.77	73.83		74.08	0.000404	4.00	1648.90	2359.77	0.22
D100-00-00_0008	129251	1PCT_100yr	7133.00	53.77	74.43		74.70	0.000416	4.13	1765.86	3739.25	0.22
D100-00-00_0008	129251	0.2PCT_500yr	8564.00	53.77	75.53		75.84	0.000470	4.48	2014.15	5883.57	0.24
D100-00-00_0008	129094	10PCT_10yr	5293.00	54.09	71.35	60.93	71.52	0.000282	3.23	1638.68	304.46	0.18
D100-00-00_0008	129094	2PCT_50yr	6527.00	54.09	73.83	61.77	73.99	0.000208	3.14	2350.67	3524.96	0.16
D100-00-00_0008	129094	1PCT_100yr	7133.00	54.09	74.44	62.16	74.60	0.000207	3.24	2627.88	4511.69	0.16
D100-00-00_0008	129094	0.2PCT_500yr	8564.00	54.09	75.54	63.01	75.73	0.000219	3.52	3137.45	5886.31	0.17
D100-00-00_0008	129069		Bridge									
D100-00-00_0008	129053	10PCT_10yr	5293.00	54.09	71.29		71.45	0.000276	3.28	1616.04	231.78	0.18
D100-00-00_0008	129053	2PCT_50yr	6527.00	54.09	73.66		73.83	0.000228	3.23	2223.90	2740.70	0.17
D100-00-00_0008	129053	1PCT_100yr	7133.00	54.09	74.25		74.42	0.000229	3.34	2515.33	4241.90	0.17
D100-00-00_0008	129053	0.2PCT_500yr	8564.00	54.09	75.39		75.58	0.000237	3.61	3113.35	5949.49	0.17
D100-00-00_0008	128897	10PCT_10yr	5293.00	54.09	71.24		71.41	0.000279	3.29	1609.01	178.16	0.18
D100-00-00_0008	128897	2PCT_50yr	6527.00	54.09	73.62		73.79	0.000244	3.26	2028.93	2684.37	0.17
D100-00-00_0008	128897	1PCT_100yr	7133.00	54.09	74.21		74.39	0.000251	3.37	2304.17	4246.84	0.17
D100-00-00_0008	128897	0.2PCT_500yr	8564.00	54.09	75.35		75.55	0.000256	3.62	3004.55	6442.91	0.18
D100-00-00_0008	128159	10PCT_10yr	5293.00	51.96	71.04		71.20	0.000288	3.16	1673.32	192.25	0.18
D100-00-00_0008	128159	2PCT_50yr	6527.00	51.96	73.46		73.61	0.000231	3.05	2414.46	2871.15	0.16
D100-00-00_0008	128159	1PCT_100yr	7133.00	51.96	74.05		74.20	0.000229	3.14	2780.26	4800.89	0.16
D100-00-00_0008	128159	0.2PCT_500yr	8564.00	51.96	75.19		75.36	0.000227	3.33	3735.52	7029.76	0.17
D100-00-00_0008	127800	10PCT_10yr	5293.00	51.08	70.94		71.09	0.000287	3.18	1662.62	171.14	0.18
D100-00-00_0008	127800	2PCT_50yr	6527.00	51.08	73.38		73.52	0.000233	3.08	2248.56	2545.55	0.17
D100-00-00_0008	127800	1PCT_100yr	7133.00	51.08	73.96		74.12	0.000234	3.18	2509.03	3825.97	0.17
D100-00-00_0008	127800	0.2PCT_500yr	8564.00	51.08	75.10		75.27	0.000240	3.41	3354.77	7062.90	0.17
D100-00-00_0008	127441	10PCT_10yr	5293.00	51.20	70.80		70.98	0.000329	3.41	1553.71	158.47	0.19
D100-00-00_0008	127441	2PCT_50yr	6527.00	51.20	73.26		73.43	0.000276	3.29	2114.02	2063.32	0.18
D100-00-00_0008	127441	1PCT_100yr	7133.00	51.20	73.85		74.02	0.000284	3.39	2368.15	2833.30	0.18
D100-00-00_0008	127441	0.2PCT_500yr	8564.00	51.20	74.98		75.18	0.000284	3.61	3162.33	6810.67	0.18
D100-00-00_0008	127294	10PCT_10yr	5293.00	51.45	70.77	60.00	70.93	0.000247	3.24	1631.80	142.67	0.17
D100-00-00_0008	127294	2PCT_50yr	6527.00	51.45	73.23	60.84	73.39	0.000205	3.25	2234.17	1811.92	0.16
D100-00-00_0008	127294	1PCT_100yr	7133.00	51.45	73.81	61.21	73.99	0.000209	3.38	2542.47	2814.05	0.16
D100-00-00_0008	127294	0.2PCT_500yr	8564.00	51.45	74.94	62.03	75.14	0.000222	3.67	3268.96	6500.59	0.17
D100-00-00_0008	127264		Bridge									
D100-00-00_0008	127248	10PCT_10yr	5293.00	51.45	70.69		70.86	0.000252	3.27	1621.06	142.26	0.17
D100-00-00_0008	127248	2PCT_50yr	6527.00	51.45	73.05		73.22	0.000221	3.31	2057.86	1493.58	0.16
D100-00-00_0008	127248	1PCT_100yr	7133.00	51.45	73.56		73.75	0.000234	3.46	2300.08	2311.82	0.17
D100-00-00_0008	127248	0.2PCT_500yr	8564.00	51.45	74.73		74.94	0.000248	3.75	2976.17	5802.65	0.18
D100-00-00_0008	127097	10PCT_10yr	5293.00	51.45	70.65		70.82	0.000254	3.28	1615.46	142.04	0.17
D100-00-00_0008	127097	2PCT_50yr	6527.00	51.45	73.02		73.19	0.000223	3.32	2031.40	1559.77	0.16
D100-00-00_0008	127097	1PCT_100yr	7133.00	51.45	73.53		73.71	0.000237	3.48	2161.93	2653.42	0.17
D100-00-00_0008	127097	0.2PCT_500yr	8564.00	51.45	74.68		74.90	0.000257	3.81	2565.33	5618.78	0.18
D100-00-00_0008	126737	10PCT_10yr	5293.00	50.34	70.58		70.73	0.000215	3.07	1725.86	188.19	0.16
D100-00-00_0008	126737	2PCT_50yr	6527.00	50.34	72.96		73.10	0.000199	3.10	2201.92	1729.32	0.16
D100-00-00_0008	126737	1PCT_100yr	7133.00	50.34	73.46		73.62	0.000218	3.24	2380.84	2715.58	0.16

HEC-RAS Plan: RevEx River: D100-00-00 Reach: D100-00-00_0008 (Continued)

Reach	River Sta	Profile	Q Total	Min Ch El	W.S. Elev	Crit W.S.	E.G. Elev	E.G. Slope	Vel Chnl	Flow Area	Top Width	Froude # Chl
			(cfs)	(ft)	(ft)	(ft)	(ft)	(ft/ft)	(ft/s)	(sq ft)	(ft)	
D100-00-00_0008	126737	0.2PCT_500yr	8564.00	50.34	74.61		74.80	0.000253	3.49	2900.24	5772.80	0.18
D100-00-00_0008	126365	10PCT_10yr	5293.00	47.73	70.51		70.64	0.000216	2.90	1827.67	183.43	0.16
D100-00-00_0008	126365	2PCT_50yr	6527.00	47.73	72.90		73.03	0.000173	2.87	2701.83	2482.26	0.14
D100-00-00_0008	126365	1PCT_100yr	7133.00	47.73	73.41		73.54	0.000178	2.99	3103.49	3895.38	0.15
D100-00-00_0008	126365	0.2PCT_500yr	8564.00	47.73	74.56		74.71	0.000178	3.16	4142.32	6273.74	0.15
D100-00-00_0008	126053	10PCT_10yr	5895.00	49.15	70.38		70.56	0.000279	3.40	1732.32	217.76	0.18
D100-00-00_0008	126053	2PCT_50yr	7420.00	49.15	72.78		72.96	0.000227	3.44	2522.48	2704.86	0.17
D100-00-00_0008	126053	1PCT_100yr	7904.00	49.15	73.29		73.48	0.000222	3.49	2777.72	4158.81	0.17
D100-00-00_0008	126053	0.2PCT_500yr	9259.00	49.15	74.44		74.64	0.000222	3.68	3483.88	7346.57	0.17
D100-00-00_0008	125607	10PCT_10yr	5895.00	50.64	70.27		70.44	0.000249	3.28	1799.88	997.58	0.17
D100-00-00_0008	125607	2PCT_50yr	7420.00	50.64	72.69		72.86	0.000222	3.35	2446.31	3741.45	0.16
D100-00-00_0008	125607	1PCT_100yr	7904.00	50.64	73.20		73.38	0.000220	3.40	2835.80	4868.59	0.16
D100-00-00_0008	125607	0.2PCT_500yr	9259.00	50.64	74.36		74.54	0.000217	3.53	3891.73	6935.60	0.17
D100-00-00_0008	125104	10PCT_10yr	5895.00	50.45	70.13		70.30	0.000291	3.36	1790.50	259.05	0.18
D100-00-00_0008	125104	2PCT_50yr	7420.00	50.45	72.58		72.74	0.000233	3.29	3084.04	4137.72	0.17
D100-00-00_0008	125104	1PCT_100yr	7904.00	50.45	73.10		73.26	0.000220	3.29	3621.89	5394.62	0.16
D100-00-00_0008	125104	0.2PCT_500yr	9259.00	50.45	74.27		74.43	0.000201	3.34	4825.26	6849.58	0.16
D100-00-00_0008	124835	10PCT_10yr	5895.00	47.02	70.06		70.23	0.000277	3.26	1856.85	456.61	0.18
D100-00-00_0008	124835	2PCT_50yr	7420.00	47.02	72.53		72.68	0.000210	3.18	3403.31	4148.18	0.16
D100-00-00_0008	124835	1PCT_100yr	7904.00	47.02	73.05		73.20	0.000198	3.17	3924.43	5241.85	0.15
D100-00-00_0008	124835	0.2PCT_500yr	9259.00	47.02	74.23		74.37	0.000183	3.23	5086.95	6951.33	0.15
D100-00-00_0008	124514	10PCT_10yr	5895.00	50.63	69.97	59.44	70.14	0.000263	3.29	1824.79	263.84	0.18
D100-00-00_0008	124514	2PCT_50yr	7420.00	50.63	72.46	60.36	72.61	0.000190	3.19	3411.84	3927.85	0.16
D100-00-00_0008	124514	1PCT_100yr	7904.00	50.63	72.99	60.63	73.14	0.000181	3.20	3930.19	4883.50	0.15
D100-00-00_0008	124514	0.2PCT_500yr	9259.00	50.63	74.17	61.36	74.31	0.000169	3.27	5083.35	6479.13	0.15
D100-00-00_0008	124481		Bridge									
D100-00-00_0008	124449	10PCT_10yr	5895.00	50.63	69.82		69.99	0.000273	3.33	1789.85	324.31	0.18
D100-00-00_0008	124449	2PCT_50yr	7420.00	50.63	72.36		72.51	0.000193	3.20	3648.27	3733.86	0.16
D100-00-00_0008	124449	1PCT_100yr	7904.00	50.63	72.92		73.06	0.000180	3.18	4196.26	4495.09	0.15
D100-00-00_0008	124449	0.2PCT_500yr	9259.00	50.63	74.09		74.23	0.000168	3.24	5346.38	6220.90	0.15
D100-00-00_0008	124253	10PCT_10yr	5895.00	48.85	69.72		69.92	0.000344	3.61	1634.26	306.57	0.20
D100-00-00_0008	124253	2PCT_50yr	7420.00	48.85	72.27		72.45	0.000277	3.47	2897.26	3860.33	0.18
D100-00-00_0008	124253	1PCT_100yr	7904.00	48.85	72.83		73.01	0.000257	3.45	3419.38	4509.96	0.18
D100-00-00_0008	124253	0.2PCT_500yr	9259.00	48.85	74.01		74.18	0.000231	3.48	4571.39	6288.68	0.17
D100-00-00_0008	123825	10PCT_10yr	5895.00	47.15	69.62		69.79	0.000259	3.31	1834.39	420.23	0.17
D100-00-00_0008	123825	2PCT_50yr	7420.00	47.15	72.19		72.34	0.000206	3.19	3507.02	3559.55	0.16
D100-00-00_0008	123825	1PCT_100yr	7904.00	47.15	72.76		72.91	0.000199	3.19	4054.08	4261.34	0.16
D100-00-00_0008	123825	0.2PCT_500yr	9259.00	47.15	73.94		74.09	0.000187	3.24	5345.65	6476.93	0.15
D100-00-00_0008	123390	10PCT_10yr	5895.00	48.47	69.53		69.68	0.000207	3.06	1953.25	340.17	0.16
D100-00-00_0008	123390	2PCT_50yr	7420.00	48.47	72.13		72.26	0.000166	2.98	3800.10	2883.99	0.14
D100-00-00_0008	123390	1PCT_100yr	7904.00	48.47	72.69		72.82	0.000162	2.99	4344.00	3568.82	0.14
D100-00-00_0008	123390	0.2PCT_500yr	9259.00	48.47	73.88		74.01	0.000156	3.06	5800.28	6145.25	0.14
D100-00-00_0008	123210	10PCT_10yr	5895.00	48.42	69.52	56.62	69.63	0.000143	2.61	2274.62	271.82	0.13
D100-00-00_0008	123210	2PCT_50yr	7420.00	48.42	72.12	57.59	72.22	0.000117	2.57	4284.63	4603.30	0.12
D100-00-00_0008	123210	1PCT_100yr	7904.00	48.42	72.69	57.87	72.78	0.000113	2.58	4949.80	6505.64	0.12
D100-00-00_0008	123210	0.2PCT_500yr	9259.00	48.42	73.87	58.61	73.97	0.000110	2.64	6507.23	7297.91	0.12
D100-00-00_0008	123156		Bridge									
D100-00-00_0008	123103	10PCT_10yr	5895.00	48.42	69.39		69.50	0.000147	2.60	2310.51	367.50	0.13
D100-00-00_0008	123103	2PCT_50yr	7420.00	48.42	71.95		72.04	0.000127	2.53	4554.58	4695.87	0.13
D100-00-00_0008	123103	1PCT_100yr	7904.00	48.42	72.53		72.62	0.000118	2.51	5365.85	5541.78	0.12
D100-00-00_0008	123103	0.2PCT_500yr	9259.00	48.42	73.76		73.84	0.000106	2.53	7097.08	7263.31	0.12
D100-00-00_0008	122816	10PCT_10yr	5895.00	47.48	69.29		69.43	0.000202	3.07	2213.25	847.18	0.16
D100-00-00_0008	122816	2PCT_50yr	7420.00	47.48	71.88		72.00	0.000146	2.86	4825.45	4312.90	0.14
D100-00-00_0008	122816	1PCT_100yr	7904.00	47.48	72.47		72.58	0.000137	2.83	5521.41	4716.13	0.13
D100-00-00_0008	122816	0.2PCT_500yr	9259.00	47.48	73.70		73.80	0.000131	2.88	7131.56	5851.54	0.13
D100-00-00_0008	122368	10PCT_10yr	5895.00	47.03	69.21		69.34	0.000180	2.90	2092.29	704.39	0.15
D100-00-00_0008	122368	2PCT_50yr	7420.00	47.03	71.82		71.93	0.000139	2.76	4676.21	4410.97	0.13
D100-00-00_0008	122368	1PCT_100yr	7904.00	47.03	72.41		72.52	0.000132	2.73	5400.77	5026.58	0.13
D100-00-00_0008	122368	0.2PCT_500yr	9259.00	47.03	73.65		73.75	0.000124	2.75	6951.42	6059.93	0.13
D100-00-00_0008	121866	10PCT_10yr	5895.00	47.79	69.12		69.25	0.000203	2.84	2174.07	894.56	0.15
D100-00-00_0008	121866	2PCT_50yr	7420.00	47.79	71.77		71.86	0.000131	2.52	5191.38	4012.76	0.13
D100-00-00_0008	121866	1PCT_100yr	7904.00	47.79	72.37		72.45	0.000115	2.43	6137.76	5260.75	0.12
D100-00-00_0008	121866	0.2PCT_500yr	9259.00	47.79	73.62		73.68	0.000094	2.35	8106.56	5967.92	0.11

HEC-RAS Plan: RevEx River: D100-00-00 Reach: D100-00-00_0008 (Continued)

Reach	River Sta	Profile	Q Total	Min Ch El	W.S. Elev	Crit W.S.	E.G. Elev	E.G. Slope	Vel Chnl	Flow Area	Top Width	Froude # Chl
			(cfs)	(ft)	(ft)	(ft)	(ft)	(ft/ft)	(ft/s)	(sq ft)	(ft)	
D100-00-00_0008	121350	10PCT_10yr	5895.00	43.99	69.06		69.16	0.000132	2.55	2431.93	503.32	0.13
D100-00-00_0008	121350	2PCT_50yr	7420.00	43.99	71.71		71.80	0.000096	2.47	4933.14	4424.97	0.11
D100-00-00_0008	121350	1PCT_100yr	7904.00	43.99	72.31		72.39	0.000089	2.43	5818.43	4979.46	0.11
D100-00-00_0008	121350	0.2PCT_500yr	9259.00	43.99	73.56		73.64	0.000079	2.41	7746.07	6977.46	0.10
D100-00-00_0008	121134	10PCT_10yr	5895.00	44.06	69.05	55.80	69.11	0.000114	2.09	2950.95	693.37	0.12
D100-00-00_0008	121134	2PCT_50yr	7420.00	44.06	71.71	56.88	71.77	0.000075	1.97	5512.82	4462.58	0.10
D100-00-00_0008	121134	1PCT_100yr	7904.00	44.06	72.31	57.16	72.36	0.000068	1.94	6381.87	4826.98	0.09
D100-00-00_0008	121134	0.2PCT_500yr	9259.00	44.06	73.56	57.92	73.61	0.000061	1.94	8208.28	6572.77	0.09
D100-00-00_0008	121081		Bridge									
D100-00-00_0008	121028	10PCT_10yr	5895.00	44.06	68.91		68.98	0.000117	2.12	2943.80	729.10	0.12
D100-00-00_0008	121028	2PCT_50yr	7420.00	44.06	71.55		71.61	0.000078	2.02	5214.16	3923.41	0.10
D100-00-00_0008	121028	1PCT_100yr	7904.00	44.06	72.18		72.24	0.000071	1.99	6102.40	4684.28	0.10
D100-00-00_0008	121028	0.2PCT_500yr	9259.00	44.06	73.50		73.55	0.000062	1.98	8016.07	6302.33	0.09
D100-00-00_0008	120719	10PCT_10yr	7587.00	46.28	68.50		68.84	0.000337	4.66	1673.77	240.51	0.21
D100-00-00_0008	120719	2PCT_50yr	9751.00	46.28	71.13		71.48	0.000305	4.86	3313.44	3214.36	0.20
D100-00-00_0008	120719	1PCT_100yr	10609.00	46.28	71.77		72.11	0.000295	4.89	4171.90	4098.41	0.20
D100-00-00_0008	120719	0.2PCT_500yr	13002.00	46.28	73.13		73.44	0.000276	4.96	6171.60	5665.71	0.20
D100-00-00_0008	120293	10PCT_10yr	7587.00	45.69	68.44		68.67	0.000290	3.83	1980.63	156.11	0.19
D100-00-00_0008	120293	2PCT_50yr	9751.00	45.69	71.08		71.33	0.000268	4.01	3061.22	3597.01	0.18
D100-00-00_0008	120293	1PCT_100yr	10609.00	45.69	71.72		71.96	0.000258	4.05	3984.70	4318.89	0.18
D100-00-00_0008	120293	0.2PCT_500yr	13002.00	45.69	73.06		73.30	0.000244	4.16	5964.64	4898.38	0.18
D100-00-00_0008	120023	10PCT_10yr	7587.00	45.34	68.26		68.58	0.000318	4.54	1689.43	125.64	0.20
D100-00-00_0008	120023	2PCT_50yr	9751.00	45.34	70.97		71.25	0.000265	4.50	3986.52	3155.67	0.19
D100-00-00_0008	120023	1PCT_100yr	10609.00	45.34	71.62		71.89	0.000250	4.47	4920.59	4302.51	0.18
D100-00-00_0008	120023	0.2PCT_500yr	13002.00	45.34	72.99		73.23	0.000230	4.51	6930.39	4766.32	0.18
D100-00-00_0008	119209	10PCT_10yr	9266.00	44.84	67.65		68.20	0.000583	6.00	1570.37	103.77	0.27
D100-00-00_0008	119209	2PCT_50yr	12957.00	44.84	70.43		70.92	0.000517	6.04	4642.59	3575.67	0.26
D100-00-00_0008	119209	1PCT_100yr	14326.00	44.84	71.15		71.58	0.000471	5.93	5777.22	4275.51	0.25
D100-00-00_0008	119209	0.2PCT_500yr	18098.00	44.84	72.57		72.95	0.000424	5.93	8242.56	5009.55	0.24
D100-00-00_0008	118767	10PCT_10yr	9266.00	43.83	67.64		67.91	0.000371	4.17	2223.17	183.15	0.21
D100-00-00_0008	118767	2PCT_50yr	12957.00	43.83	70.41		70.68	0.000322	4.35	5225.29	4346.52	0.20
D100-00-00_0008	118767	1PCT_100yr	14326.00	43.83	71.12		71.37	0.000294	4.29	6677.38	4992.51	0.19
D100-00-00_0008	118767	0.2PCT_500yr	18098.00	43.83	72.54		72.76	0.000265	4.33	9573.22	6981.71	0.19
D100-00-00_0008	118269	10PCT_10yr	9266.00	44.04	67.44		67.73	0.000347	4.34	2176.27	314.33	0.21
D100-00-00_0008	118269	2PCT_50yr	12957.00	44.04	70.30		70.51	0.000274	4.05	7148.81	5486.79	0.19
D100-00-00_0008	118269	1PCT_100yr	14326.00	44.04	71.03		71.21	0.000240	3.91	8831.46	6108.02	0.18
D100-00-00_0008	118269	0.2PCT_500yr	18098.00	44.04	72.47		72.62	0.000207	3.86	12141.04	6588.19	0.17
D100-00-00_0008	117459	10PCT_10yr	9600.00	43.62	67.08		67.41	0.000456	4.62	2082.72	214.35	0.23
D100-00-00_0008	117459	2PCT_50yr	12957.00	43.62	70.02		70.27	0.000331	4.30	6042.22	4005.63	0.20
D100-00-00_0008	117459	1PCT_100yr	14326.00	43.62	70.79		71.01	0.000289	4.16	7826.50	4812.31	0.19
D100-00-00_0008	117459	0.2PCT_500yr	18098.00	43.62	72.28		72.45	0.000239	4.04	11315.36	6209.64	0.18
D100-00-00_0008	116858	10PCT_10yr	9600.00	42.29	66.79		67.14	0.000439	4.73	2030.82	154.78	0.23
D100-00-00_0008	116858	2PCT_50yr	12957.00	42.29	69.64		70.02	0.000481	5.01	3429.14	3624.26	0.24
D100-00-00_0008	116858	1PCT_100yr	14326.00	42.29	70.42		70.78	0.000444	5.01	4524.93	4692.92	0.24
D100-00-00_0008	116858	0.2PCT_500yr	18098.00	42.29	71.91		72.25	0.000409	5.14	6940.48	7120.07	0.23
D100-00-00_0008	116609	10PCT_10yr	9600.00	43.56	66.77	53.27	67.00	0.000259	3.87	2481.15	174.76	0.18
D100-00-00_0008	116609	2PCT_50yr	12957.00	43.56	69.60	54.91	69.87	0.000307	4.21	3909.75	6973.22	0.20
D100-00-00_0008	116609	1PCT_100yr	14326.00	43.56	70.37	55.52	70.64	0.000311	4.25	4975.32	8692.36	0.20
D100-00-00_0008	116609	0.2PCT_500yr	18098.00	43.56	71.86	57.06	72.13	0.000300	4.46	7090.02	9890.61	0.20
D100-00-00_0008	116459		Bridge									
D100-00-00_0008	116310	10PCT_10yr	9600.00	43.56	66.44		66.68	0.000278	3.95	2447.66	207.18	0.19
D100-00-00_0008	116310	2PCT_50yr	12957.00	43.56	68.95		69.24	0.000286	4.40	3849.56	4417.48	0.19
D100-00-00_0008	116310	1PCT_100yr	14326.00	43.56	69.66		69.96	0.000287	4.54	4718.07	6060.33	0.20
D100-00-00_0008	116310	0.2PCT_500yr	18098.00	43.56	71.07		71.41	0.000307	4.96	6462.42	7744.68	0.21
D100-00-00_0008	116033	10PCT_10yr	9600.00	38.16	66.31		66.59	0.000335	4.22	2277.92	176.01	0.20
D100-00-00_0008	116033	2PCT_50yr	12957.00	38.16	68.81		69.14	0.000375	4.65	3386.40	3025.86	0.22
D100-00-00_0008	116033	1PCT_100yr	14326.00	38.16	69.51		69.86	0.000380	4.83	3887.25	3755.63	0.22
D100-00-00_0008	116033	0.2PCT_500yr	18098.00	38.16	70.86		71.28	0.000424	5.41	4905.75	6469.77	0.24
D100-00-00_0008	115557	10PCT_10yr	9600.00	40.91	66.10		66.42	0.000358	4.50	2134.51	148.03	0.21
D100-00-00_0008	115557	2PCT_50yr	12957.00	40.91	68.56		68.95	0.000396	5.05	3356.51	3244.27	0.22
D100-00-00_0008	115557	1PCT_100yr	14326.00	40.91	69.26		69.67	0.000401	5.23	4035.80	5281.46	0.23
D100-00-00_0008	115557	0.2PCT_500yr	18098.00	40.91	70.60		71.07	0.000443	5.79	5434.54	7608.73	0.24
D100-00-00_0008	115199	10PCT_10yr	9600.00	42.95	66.03		66.26	0.000362	3.91	2457.29	303.52	0.21
D100-00-00_0008	115199	2PCT_50yr	12957.00	42.95	68.52		68.78	0.000338	4.17	4177.59	4030.64	0.20

HEC-RAS Plan: RevEx River: D100-00-00 Reach: D100-00-00_0008 (Continued)

Reach	River Sta	Profile	Q Total	Min Ch El	W.S. Elev	Crit W.S.	E.G. Elev	E.G. Slope	Vel Chnl	Flow Area	Top Width	Froude # Chl
			(cfs)	(ft)	(ft)	(ft)	(ft)	(ft/ft)	(ft/s)	(sq ft)	(ft)	
D100-00-00_0008	115199	1PCT_100yr	14326.00	42.95	69.23		69.49	0.000331	4.24	5105.06	6163.66	0.20
D100-00-00_0008	115199	0.2PCT_500yr	18098.00	42.95	70.59		70.88	0.000337	4.57	6959.92	7787.97	0.21
D100-00-00_0008	114805	10PCT_10yr	9600.00	41.96	65.90		66.13	0.000328	3.83	2508.02	281.80	0.20
D100-00-00_0008	114805	2PCT_50yr	12957.00	41.96	68.39		68.64	0.000353	4.10	3816.01	4343.65	0.21
D100-00-00_0008	114805	1PCT_100yr	14326.00	41.96	69.09		69.36	0.000344	4.21	4570.76	6311.91	0.21
D100-00-00_0008	114805	0.2PCT_500yr	18098.00	41.96	70.43		70.74	0.000360	4.60	6022.21	8189.10	0.22
D100-00-00_0008	114251	10PCT_10yr	9600.00	40.87	65.63		65.92	0.000386	4.35	2205.20	231.61	0.21
D100-00-00_0008	114251	2PCT_50yr	12957.00	40.87	68.06		68.41	0.000457	4.81	3064.98	4240.01	0.24
D100-00-00_0008	114251	1PCT_100yr	14326.00	40.87	68.75		69.13	0.000458	4.99	3536.35	6401.29	0.24
D100-00-00_0008	114251	0.2PCT_500yr	18098.00	40.87	70.02		70.49	0.000515	5.61	4516.11	8622.93	0.26
D100-00-00_0008	113855	10PCT_10yr	9600.00	40.52	65.53		65.77	0.000309	3.90	2464.09	374.34	0.19
D100-00-00_0008	113855	2PCT_50yr	12957.00	40.52	67.96		68.24	0.000331	4.28	3611.64	4923.58	0.20
D100-00-00_0008	113855	1PCT_100yr	14326.00	40.52	68.65		68.95	0.000333	4.44	4182.51	6842.61	0.21
D100-00-00_0008	113855	0.2PCT_500yr	18098.00	40.52	69.92		70.28	0.000374	4.98	5258.18	8877.65	0.22
D100-00-00_0008	113759	10PCT_10yr	9600.00	40.52	65.50	52.16	65.74	0.000312	3.91	2464.55	327.53	0.19
D100-00-00_0008	113759	2PCT_50yr	12957.00	40.52	67.93	54.20	68.21	0.000332	4.28	3797.69	4295.31	0.20
D100-00-00_0008	113759	1PCT_100yr	14326.00	40.52	68.62	54.84	68.92	0.000334	4.44	4401.87	6660.42	0.21
D100-00-00_0008	113759	0.2PCT_500yr	18098.00	40.52	69.89	56.49	70.25	0.000378	4.99	5509.13	8630.95	0.22
D100-00-00_0008	113704		Bridge									
D100-00-00_0008	113654	10PCT_10yr	9600.00	40.52	65.32		65.57	0.000314	3.96	2423.52	460.98	0.20
D100-00-00_0008	113654	2PCT_50yr	12957.00	40.52	67.50		67.81	0.000341	4.52	3344.25	3684.50	0.21
D100-00-00_0008	113654	1PCT_100yr	14326.00	40.52	68.09		68.43	0.000357	4.75	3925.78	5728.93	0.21
D100-00-00_0008	113654	0.2PCT_500yr	18098.00	40.52	69.39		69.81	0.000404	5.33	5233.66	8054.29	0.23
D100-00-00_0008	113241	10PCT_10yr	9600.00	40.49	65.20		65.44	0.000280	3.95	2478.23	450.08	0.19
D100-00-00_0008	113241	2PCT_50yr	12957.00	40.49	67.36		67.67	0.000323	4.53	3381.52	3637.20	0.20
D100-00-00_0008	113241	1PCT_100yr	14326.00	40.49	67.93		68.28	0.000344	4.79	3766.57	4863.75	0.21
D100-00-00_0008	113241	0.2PCT_500yr	18098.00	40.49	69.19		69.63	0.000402	5.45	5010.84	9104.46	0.23
D100-00-00_0008	112774	10PCT_10yr	9600.00	40.56	65.07		65.31	0.000292	3.96	2424.42	483.44	0.19
D100-00-00_0008	112774	2PCT_50yr	12957.00	40.56	67.21		67.52	0.000347	4.51	3442.66	4224.37	0.21
D100-00-00_0008	112774	1PCT_100yr	14326.00	40.56	67.77		68.12	0.000365	4.76	3965.10	5678.91	0.22
D100-00-00_0008	112774	0.2PCT_500yr	18098.00	40.56	69.02		69.44	0.000415	5.35	5295.61	8959.69	0.24
D100-00-00_0008	112288	10PCT_10yr	13433.00	39.36	64.76		65.13	0.000385	4.87	2774.61	433.08	0.22
D100-00-00_0008	112288	2PCT_50yr	17208.00	39.36	66.88		67.31	0.000446	5.31	4197.74	3843.61	0.24
D100-00-00_0008	112288	1PCT_100yr	18226.00	39.36	67.49		67.92	0.000424	5.32	4986.77	5149.13	0.24
D100-00-00_0008	112288	0.2PCT_500yr	21615.00	39.36	68.78		69.23	0.000418	5.57	6720.47	8893.61	0.24
D100-00-00_0008	111704	10PCT_10yr	13433.00	40.28	64.54		64.89	0.000418	4.80	2975.50	1170.83	0.23
D100-00-00_0008	111704	2PCT_50yr	17208.00	40.28	66.67		67.04	0.000408	5.01	5318.09	3648.07	0.23
D100-00-00_0008	111704	1PCT_100yr	18226.00	40.28	67.31		67.66	0.000377	4.95	6269.82	4992.93	0.22
D100-00-00_0008	111704	0.2PCT_500yr	21615.00	40.28	68.63		68.98	0.000352	5.06	8699.00	8900.49	0.22
D100-00-00_0008	111015	10PCT_10yr	13433.00	38.34	64.25		64.61	0.000416	4.85	3424.71	966.68	0.23
D100-00-00_0008	111015	2PCT_50yr	17208.00	38.34	66.42		66.77	0.000372	5.00	6250.08	3092.84	0.22
D100-00-00_0008	111015	1PCT_100yr	18226.00	38.34	67.08		67.41	0.000335	4.88	7491.55	4314.59	0.21
D100-00-00_0008	111015	0.2PCT_500yr	21615.00	38.34	68.44		68.74	0.000301	4.88	10483.34	8414.46	0.20
D100-00-00_0008	110326	10PCT_10yr	13433.00	39.75	64.03		64.35	0.000309	4.58	3598.47	1218.73	0.20
D100-00-00_0008	110326	2PCT_50yr	17208.00	39.75	66.24		66.55	0.000273	4.68	7887.13	4394.08	0.19
D100-00-00_0008	110326	1PCT_100yr	18226.00	39.75	66.94		67.21	0.000240	4.50	9778.54	5127.07	0.18
D100-00-00_0008	110326	0.2PCT_500yr	21615.00	39.75	68.34		68.56	0.000208	4.39	13611.74	8660.62	0.17
D100-00-00_0008	110003	10PCT_10yr	13433.00	38.04	63.83	51.36	64.20	0.000561	4.96	3068.10	785.50	0.26
D100-00-00_0008	110003	2PCT_50yr	17208.00	38.04	66.11	53.12	66.44	0.000415	4.82	7160.00	4187.96	0.23
D100-00-00_0008	110003	1PCT_100yr	18226.00	38.04	66.85	53.53	67.12	0.000340	4.52	9379.12	5431.48	0.21
D100-00-00_0008	110003	0.2PCT_500yr	21615.00	38.04	68.28	54.86	68.48	0.000260	4.21	13687.65	9717.29	0.19
D100-00-00_0008	109968		Bridge									
D100-00-00_0008	109934	10PCT_10yr	13433.00	38.04	63.67		64.07	0.000500	5.11	3047.51	696.35	0.25
D100-00-00_0008	109934	2PCT_50yr	17208.00	38.04	65.93		66.29	0.000411	5.09	6783.59	3926.17	0.23
D100-00-00_0008	109934	1PCT_100yr	18226.00	38.04	66.66		66.97	0.000346	4.82	8969.80	5367.58	0.21
D100-00-00_0008	109934	0.2PCT_500yr	21615.00	38.04	68.10		68.34	0.000270	4.51	13340.93	9677.41	0.19
D100-00-00_0008	109510	10PCT_10yr	13433.00	38.95	63.52		63.86	0.000345	4.72	3477.12	761.78	0.21
D100-00-00_0008	109510	2PCT_50yr	17208.00	38.95	65.80		66.12	0.000298	4.81	6385.16	3575.39	0.20
D100-00-00_0008	109510	1PCT_100yr	18226.00	38.95	66.55		66.83	0.000262	4.63	8278.29	5758.14	0.19
D100-00-00_0008	109510	0.2PCT_500yr	21615.00	38.95	68.00		68.23	0.000222	4.49	12593.03	9925.93	0.18
D100-00-00_0008	108717	10PCT_10yr	13433.00	38.39	63.24		63.57	0.000378	4.71	3895.58	1055.02	0.22
D100-00-00_0008	108717	2PCT_50yr	17208.00	38.39	65.61		65.87	0.000289	4.53	7557.28	3583.56	0.20
D100-00-00_0008	108717	1PCT_100yr	18226.00	38.39	66.39		66.62	0.000247	4.31	9414.11	5775.28	0.18
D100-00-00_0008	108717	0.2PCT_500yr	21615.00	38.39	67.87		68.05	0.000202	4.13	13383.51	10619.42	0.17

HEC-RAS Plan: RevEx River: D100-00-00 Reach: D100-00-00_0008 (Continued)

Reach	River Sta	Profile	Q Total	Min Ch El	W.S. Elev	Crit W.S.	E.G. Elev	E.G. Slope	Vel Chnl	Flow Area	Top Width	Froude # Chl
			(cfs)	(ft)	(ft)	(ft)	(ft)	(ft/ft)	(ft/s)	(sq ft)	(ft)	
D100-00-00_0008	107211	10PCT_10yr	13433.00	38.86	63.06		63.38	0.000062	4.62	4273.99	1240.09	0.21
D100-00-00_0008	107211	2PCT_50yr	17208.00	38.86	65.36		65.70	0.000059	4.88	7136.09	4141.61	0.21
D100-00-00_0008	107211	1PCT_100yr	18226.00	38.86	66.13		66.46	0.000055	4.84	8202.95	5462.68	0.20
D100-00-00_0008	107211	0.2PCT_500yr	21615.00	38.86	67.54		67.90	0.000055	5.10	10252.21	10392.15	0.20
D100-00-00_0008	106742	10PCT_10yr	13870.00	38.06	62.73		63.32	0.000133	6.15	2714.11	1433.33	0.30
D100-00-00_0008	106742	2PCT_50yr	17159.00	38.06	65.08		65.64	0.000108	6.16	5009.59	4355.70	0.28
D100-00-00_0008	106742	1PCT_100yr	18602.00	38.06	65.83		66.40	0.000104	6.25	5823.85	5461.11	0.27
D100-00-00_0008	106742	0.2PCT_500yr	21654.00	38.06	67.26		67.84	0.000099	6.43	7508.90	9999.13	0.27
D100-00-00_0008	106423	10PCT_10yr	13870.00	38.24	62.72	52.53	63.25	0.000142	5.83	2498.08	844.87	0.30
D100-00-00_0008	106423	2PCT_50yr	17159.00	38.24	65.06	54.01	65.60	0.000119	5.94	3368.04	4084.28	0.29
D100-00-00_0008	106423	1PCT_100yr	18602.00	38.24	65.80	54.59	66.36	0.000115	6.06	3962.82	5186.16	0.28
D100-00-00_0008	106423	0.2PCT_500yr	21654.00	38.24	67.21	55.74	67.80	0.000109	6.30	5283.71	10937.62	0.28
D100-00-00_0008	106272		Bridge									
D100-00-00_0008	106089	10PCT_10yr	13870.00	38.24	62.61		63.08	0.000197	5.60	2895.81	1404.75	0.29
D100-00-00_0008	106089	2PCT_50yr	17159.00	38.24	64.89		65.30	0.000155	5.41	4090.74	4629.58	0.26
D100-00-00_0008	106089	1PCT_100yr	18602.00	38.24	65.54		65.95	0.000149	5.46	4556.46	5304.26	0.26
D100-00-00_0008	106089	0.2PCT_500yr	21654.00	38.24	66.78		67.18	0.000136	5.53	5667.86	8982.71	0.25
D100-00-00_0008	105986	10PCT_10yr	13870.00	38.24	62.51		63.04	0.000140	5.89	2703.29	2611.60	0.30
D100-00-00_0008	105986	2PCT_50yr	17159.00	38.24	64.81		65.27	0.000107	5.69	4123.04	3811.06	0.27
D100-00-00_0008	105986	1PCT_100yr	18602.00	38.24	65.45		65.92	0.000104	5.78	4559.22	4672.74	0.27
D100-00-00_0008	105986	0.2PCT_500yr	21654.00	38.24	66.66		67.15	0.000099	5.97	5386.43	7713.50	0.27
D100-00-00_0008	104874	10PCT_10yr	13870.00	36.72	62.46		62.87	0.000105	5.26	3056.37	1534.96	0.26
D100-00-00_0008	104874	2PCT_50yr	17159.00	36.72	64.77		65.14	0.000080	5.15	4455.58	4929.02	0.24
D100-00-00_0008	104874	1PCT_100yr	18602.00	36.72	65.41		65.79	0.000078	5.25	4862.72	6309.68	0.24
D100-00-00_0008	104874	0.2PCT_500yr	21654.00	36.72	66.62		67.03	0.000077	5.46	5634.30	8871.61	0.24
D100-00-00_0008	104710	10PCT_10yr	13870.00	36.72	62.41	51.59	62.85	0.000116	5.36	2940.17	1506.42	0.28
D100-00-00_0008	104710	2PCT_50yr	17159.00	36.72	64.74	53.09	65.13	0.000085	5.20	4388.74	5339.78	0.24
D100-00-00_0008	104710	1PCT_100yr	18602.00	36.72	65.38	53.67	65.78	0.000083	5.29	4790.37	5950.33	0.24
D100-00-00_0008	104710	0.2PCT_500yr	21654.00	36.72	66.60	54.80	67.01	0.000081	5.49	5550.79	8476.48	0.24
D100-00-00_0008	104688		Bridge									
D100-00-00_0008	104651	10PCT_10yr	13870.00	36.72	62.10		62.61	0.000113	5.80	2698.34	1230.08	0.28
D100-00-00_0008	104651	2PCT_50yr	17159.00	36.72	64.56		65.02	0.000087	5.69	4118.89	4832.06	0.25
D100-00-00_0008	104651	1PCT_100yr	18602.00	36.72	65.25		65.72	0.000085	5.78	4534.81	6009.42	0.25
D100-00-00_0008	104651	0.2PCT_500yr	21654.00	36.72	66.44		66.94	0.000085	6.06	5248.70	8296.54	0.25
D100-00-00_0008	104492	10PCT_10yr	13870.00	36.72	62.08		62.59	0.000112	5.78	2799.47	1430.84	0.28
D100-00-00_0008	104492	2PCT_50yr	17159.00	36.72	64.55		65.00	0.000086	5.64	4355.74	4667.58	0.25
D100-00-00_0008	104492	1PCT_100yr	18602.00	36.72	65.24		65.70	0.000084	5.73	4815.88	6317.86	0.25
D100-00-00_0008	104492	0.2PCT_500yr	21654.00	36.72	66.43		66.92	0.000084	6.00	5605.37	8468.53	0.25
D100-00-00_0008	103726	10PCT_10yr	13870.00	36.67	62.04		62.48	0.000111	5.35	2944.82	862.98	0.27
D100-00-00_0008	103726	2PCT_50yr	17159.00	36.67	64.51		64.92	0.000089	5.22	4660.90	6629.04	0.25
D100-00-00_0008	103726	1PCT_100yr	18602.00	36.67	65.21		65.62	0.000086	5.28	5273.43	7812.35	0.25
D100-00-00_0008	103726	0.2PCT_500yr	21654.00	36.67	66.41		66.83	0.000083	5.47	6325.44	9900.97	0.24
D100-00-00_0008	103507	10PCT_10yr	13870.00	36.67	62.01	51.20	62.46	0.000113	5.39	2636.79	873.42	0.27
D100-00-00_0008	103507	2PCT_50yr	17159.00	36.67	64.43	52.79	64.88	0.000097	5.42	3983.37	6841.44	0.26
D100-00-00_0008	103507	1PCT_100yr	18602.00	36.67	65.12	53.37	65.58	0.000095	5.53	4599.83	7873.24	0.26
D100-00-00_0008	103507	0.2PCT_500yr	21654.00	36.67	66.30	54.53	66.79	0.000093	5.77	5695.54	9619.79	0.26
D100-00-00_0008	103453		Bridge									
D100-00-00_0008	103413	10PCT_10yr	13870.00	36.67	61.88		62.34	0.000116	5.44	2666.34	1108.69	0.28
D100-00-00_0008	103413	2PCT_50yr	17159.00	36.67	64.09		64.56	0.000108	5.55	3965.23	6460.14	0.27
D100-00-00_0008	103413	1PCT_100yr	18602.00	36.67	64.69		65.19	0.000110	5.71	4435.63	7471.64	0.28
D100-00-00_0008	103413	0.2PCT_500yr	21654.00	36.67	65.73		66.28	0.000114	6.04	5380.99	8665.99	0.28
D100-00-00_0008	103205	10PCT_10yr	13870.00	36.67	61.85		62.32	0.000117	5.46	2542.05	1002.06	0.28
D100-00-00_0008	103205	2PCT_50yr	17159.00	36.67	64.06		64.54	0.000107	5.58	3642.58	6850.61	0.27
D100-00-00_0008	103205	1PCT_100yr	18602.00	36.67	64.66		65.16	0.000107	5.73	4157.67	7683.01	0.27
D100-00-00_0008	103205	0.2PCT_500yr	21654.00	36.67	65.71		66.26	0.000108	6.05	5197.58	8530.89	0.28
D100-00-00_0008	101972	10PCT_10yr	18869.00	35.92	61.27		62.11	0.000165	7.33	2588.69	691.86	0.34
D100-00-00_0008	101972	2PCT_50yr	22483.00	35.92	63.50		64.35	0.000142	7.44	4094.96	7065.59	0.32
D100-00-00_0008	101972	1PCT_100yr	23624.00	35.92	64.16		64.98	0.000134	7.40	4975.78	8341.42	0.31
D100-00-00_0008	101972	0.2PCT_500yr	27142.00	35.92	65.18		66.07	0.000138	7.80	6343.48	9473.76	0.32
D100-00-00_0008	101747	10PCT_10yr	18869.00	35.92	61.23	51.43	62.07	0.000167	7.35	2567.72	1143.08	0.34
D100-00-00_0008	101747	2PCT_50yr	22483.00	35.92	63.48	52.71	64.30	0.000141	7.39	4239.97	7336.31	0.32
D100-00-00_0008	101747	1PCT_100yr	23624.00	35.92	64.14	53.12	64.94	0.000131	7.32	5064.48	9006.95	0.31
D100-00-00_0008	101747	0.2PCT_500yr	27142.00	35.92	65.18	54.22	66.02	0.000133	7.66	6339.11	11180.83	0.32

HEC-RAS Plan: RevEx River: D100-00-00 Reach: D100-00-00_0008 (Continued)

Reach	River Sta	Profile	Q Total	Min Ch El	W.S. Elev	Crit W.S.	E.G. Elev	E.G. Slope	Vel Chnl	Flow Area	Top Width	Froude # Chl
			(cfs)	(ft)	(ft)	(ft)	(ft)	(ft/ft)	(ft/s)	(sq ft)	(ft)	
D100-00-00_0008	101704		Bridge									
D100-00-00_0008	101662	10PCT_10yr	18869.00	35.92	60.79		61.68	0.000181	7.58	2490.51	974.07	0.35
D100-00-00_0008	101662	2PCT_50yr	22483.00	35.92	62.57		63.54	0.000175	7.94	3241.97	4409.94	0.35
D100-00-00_0008	101662	1PCT_100yr	23624.00	35.92	63.11		64.08	0.000169	7.99	3766.58	6706.86	0.35
D100-00-00_0008	101662	0.2PCT_500yr	27142.00	35.92	64.47		65.44	0.000157	8.12	5369.84	9401.50	0.34
D100-00-00_0008	101444	10PCT_10yr	18869.00	35.92	60.74		61.64	0.000182	7.59	2543.31	1503.12	0.35
D100-00-00_0008	101444	2PCT_50yr	22483.00	35.92	62.53		63.49	0.000174	7.91	3615.33	5217.43	0.35
D100-00-00_0008	101444	1PCT_100yr	23624.00	35.92	63.08		64.03	0.000168	7.95	4203.70	7410.90	0.35
D100-00-00_0008	101444	0.2PCT_500yr	27142.00	35.92	64.45		65.40	0.000156	8.08	5809.17	9533.08	0.34
D100-00-00_0008	101046	10PCT_10yr	18869.00	35.92	60.68		61.56	0.000181	7.55	3340.77	2249.85	0.35
D100-00-00_0008	101046	2PCT_50yr	22483.00	35.92	62.52		63.40	0.000165	7.69	5314.76	5466.39	0.34
D100-00-00_0008	101046	1PCT_100yr	23624.00	35.92	63.08		63.94	0.000156	7.67	6063.06	6931.75	0.34
D100-00-00_0008	101046	0.2PCT_500yr	27142.00	35.92	64.47		65.30	0.000142	7.72	7944.38	9485.93	0.32
D100-00-00_0008	99641	10PCT_10yr	18869.00	35.30	60.40		61.30	0.000185	7.63	2472.54	1029.06	0.36
D100-00-00_0008	99641	2PCT_50yr	22483.00	35.30	62.13		63.14	0.000189	8.06	3070.26	3489.47	0.36
D100-00-00_0008	99641	1PCT_100yr	23624.00	35.30	62.65		63.68	0.000190	8.18	3324.40	4725.69	0.37
D100-00-00_0008	99641	0.2PCT_500yr	27142.00	35.30	63.91		65.04	0.000197	8.59	4326.03	8248.74	0.38
D100-00-00_0008	98913	10PCT_10yr	18570.00	35.39	60.28		61.16	0.000182	7.54	2860.96	1991.27	0.35
D100-00-00_0008	98913	2PCT_50yr	21759.00	35.39	62.06		62.98	0.000176	7.74	3787.15	4250.94	0.35
D100-00-00_0008	98913	1PCT_100yr	22969.00	35.39	62.58		63.52	0.000177	7.87	4094.30	6024.01	0.35
D100-00-00_0008	98913	0.2PCT_500yr	26556.00	35.39	63.82		64.87	0.000187	8.32	5122.22	8843.86	0.37
D100-00-00_0008	97857	10PCT_10yr	18570.00	35.12	60.20		60.94	0.000161	6.91	3081.42	1262.95	0.33
D100-00-00_0008	97857	2PCT_50yr	21759.00	35.12	61.99		62.76	0.000155	7.09	3759.19	4450.03	0.33
D100-00-00_0008	97857	1PCT_100yr	22969.00	35.12	62.50		63.30	0.000157	7.22	3999.68	5796.09	0.33
D100-00-00_0008	97857	0.2PCT_500yr	26556.00	35.12	63.75		64.64	0.000164	7.63	4801.56	8157.57	0.34
D100-00-00_0008	97644	10PCT_10yr	18570.00	35.12	60.14	50.91	60.90	0.000165	6.99	2779.06	1555.81	0.34
D100-00-00_0008	97644	2PCT_50yr	21759.00	35.12	61.93	52.01	62.72	0.000158	7.15	3704.80	4908.25	0.33
D100-00-00_0008	97644	1PCT_100yr	22969.00	35.12	62.45	52.37	63.26	0.000158	7.26	4136.70	6221.51	0.33
D100-00-00_0008	97644	0.2PCT_500yr	26556.00	35.12	63.73	53.42	64.59	0.000155	7.55	5510.40	8978.60	0.33
D100-00-00_0008	97626		Bridge									
D100-00-00_0008	97588	10PCT_10yr	18570.00	35.12	60.01		60.78	0.000169	7.05	2907.43	1536.18	0.34
D100-00-00_0008	97588	2PCT_50yr	21759.00	35.12	61.68		62.49	0.000164	7.25	3835.03	4054.39	0.34
D100-00-00_0008	97588	1PCT_100yr	22969.00	35.12	62.12		62.97	0.000168	7.41	4153.41	5072.96	0.34
D100-00-00_0008	97588	0.2PCT_500yr	26556.00	35.12	63.20		64.14	0.000179	7.86	5164.80	7925.67	0.36
D100-00-00_0008	97389	10PCT_10yr	18570.00	35.12	59.97		60.74	0.000170	7.07	2799.75	2020.34	0.34
D100-00-00_0008	97389	2PCT_50yr	21759.00	35.12	61.62		62.45	0.000168	7.33	3387.55	3884.10	0.34
D100-00-00_0008	97389	1PCT_100yr	22969.00	35.12	62.06		62.93	0.000172	7.48	3594.36	4454.05	0.35
D100-00-00_0008	97389	0.2PCT_500yr	26556.00	35.12	63.10		64.09	0.000187	8.01	4247.23	7298.92	0.36
D100-00-00_0008	97063	10PCT_10yr	18570.00	34.92	59.84		60.68	0.000171	7.37	3031.34	1946.86	0.34
D100-00-00_0008	97063	2PCT_50yr	21759.00	34.92	61.50		62.39	0.000168	7.62	3995.20	4789.44	0.34
D100-00-00_0008	97063	1PCT_100yr	22969.00	34.92	61.95		62.86	0.000171	7.77	4353.18	6004.56	0.35
D100-00-00_0008	97063	0.2PCT_500yr	26556.00	34.92	63.02		64.02	0.000176	8.22	5513.64	8316.34	0.36
D100-00-00_0008	96472	10PCT_10yr	18334.00	35.02	59.76		60.57	0.000171	7.34	2982.54	2985.94	0.34
D100-00-00_0008	96472	2PCT_50yr	21198.00	35.02	61.50		62.26	0.000146	7.22	4066.27	7226.50	0.32
D100-00-00_0008	96472	1PCT_100yr	22459.00	35.02	61.96		62.73	0.000144	7.33	4371.13	7840.40	0.32
D100-00-00_0008	96472	0.2PCT_500yr	26097.00	35.02	63.05		63.88	0.000146	7.71	5098.30	9404.08	0.33
D100-00-00_0008	95321	10PCT_10yr	18334.00	34.17	59.71		60.36	0.000126	6.68	3661.05	2983.63	0.30
D100-00-00_0008	95321	2PCT_50yr	21198.00	34.17	61.47		62.07	0.000105	6.58	4653.90	5265.44	0.28
D100-00-00_0008	95321	1PCT_100yr	22459.00	34.17	61.93		62.54	0.000105	6.69	4911.78	6415.22	0.28
D100-00-00_0008	95321	0.2PCT_500yr	26097.00	34.17	63.02		63.69	0.000110	7.10	5524.54	8561.91	0.29
D100-00-00_0008	95152	10PCT_10yr	18334.00	34.17	59.67	49.78	60.33	0.000128	6.73	3644.59	4891.54	0.30
D100-00-00_0008	95152	2PCT_50yr	21198.00	34.17	61.45	50.80	62.05	0.000105	6.55	4761.43	7786.10	0.28
D100-00-00_0008	95152	1PCT_100yr	22459.00	34.17	61.91	51.25	62.52	0.000104	6.65	5049.09	8938.07	0.28
D100-00-00_0008	95152	0.2PCT_500yr	26097.00	34.17	63.01	52.43	63.66	0.000107	7.02	5733.08	10872.55	0.29
D100-00-00_0008	95105		Bridge									
D100-00-00_0008	95058	10PCT_10yr	18334.00	34.17	59.07		59.86	0.000166	7.19	3069.32	3020.39	0.34
D100-00-00_0008	95058	2PCT_50yr	21198.00	34.17	61.09		61.75	0.000125	6.82	4318.93	6047.02	0.30
D100-00-00_0008	95058	1PCT_100yr	22459.00	34.17	61.65		62.31	0.000120	6.85	4667.33	7244.90	0.30
D100-00-00_0008	95058	0.2PCT_500yr	26097.00	34.17	62.77		63.47	0.000122	7.19	5362.00	10228.32	0.30
D100-00-00_0008	94893	10PCT_10yr	18334.00	34.17	59.03		59.83	0.000169	7.24	2966.10	2604.98	0.34
D100-00-00_0008	94893	2PCT_50yr	21198.00	34.17	61.03		61.72	0.000130	6.93	4083.13	5140.80	0.31
D100-00-00_0008	94893	1PCT_100yr	22459.00	34.17	61.59		62.28	0.000126	6.98	4394.15	6357.07	0.30
D100-00-00_0008	94893	0.2PCT_500yr	26097.00	34.17	62.69		63.44	0.000128	7.37	5010.76	8406.13	0.31

HEC-RAS Plan: RevEx River: D100-00-00 Reach: D100-00-00_0008 (Continued)

Reach	River Sta	Profile	Q Total	Min Ch El	W.S. Elev	Crit W.S.	E.G. Elev	E.G. Slope	Vel Chnl	Flow Area	Top Width	Froude # Chl
			(cfs)	(ft)	(ft)	(ft)	(ft)	(ft/ft)	(ft/s)	(sq ft)	(ft)	
D100-00-00_0008	94312	10PCT_10yr	18334.00	33.74	58.95		59.73	0.000158	7.18	2947.61	3110.91	0.33
D100-00-00_0008	94312	2PCT_50yr	21198.00	33.74	60.95		61.65	0.000128	6.95	4010.08	5975.71	0.30
D100-00-00_0008	94312	1PCT_100yr	22459.00	33.74	61.50		62.21	0.000125	7.01	4314.79	6853.54	0.30
D100-00-00_0008	94312	0.2PCT_500yr	26097.00	33.74	62.60		63.36	0.000129	7.42	4914.79	8702.97	0.31
D100-00-00_0008	93846	10PCT_10yr	23064.00	33.40	58.25		59.58	0.000265	9.26	2524.43	1085.23	0.43
D100-00-00_0008	93846	2PCT_50yr	26530.00	33.40	60.26		61.51	0.000220	9.10	3582.60	3653.65	0.40
D100-00-00_0008	93846	1PCT_100yr	27682.00	33.40	60.87		62.08	0.000206	9.02	3991.54	4875.68	0.39
D100-00-00_0008	93846	0.2PCT_500yr	32325.00	33.40	61.86		63.22	0.000220	9.69	4662.43	8273.47	0.40
D100-00-00_0008	93397	10PCT_10yr	23064.00	32.26	58.37		59.38	0.000193	8.17	3429.38	1711.63	0.37
D100-00-00_0008	93397	2PCT_50yr	26530.00	32.26	60.46		61.31	0.000146	7.75	4876.34	5097.32	0.33
D100-00-00_0008	93397	1PCT_100yr	27682.00	32.26	61.07		61.89	0.000136	7.66	5298.75	6946.33	0.32
D100-00-00_0008	93397	0.2PCT_500yr	32325.00	32.26	62.10		63.01	0.000144	8.19	6014.79	9850.75	0.33
D100-00-00_0008	93213	10PCT_10yr	23064.00	32.26	58.36	49.34	59.32	0.000207	8.02	3483.28	1983.92	0.38
D100-00-00_0008	93213	2PCT_50yr	26530.00	32.26	60.45	50.44	61.26	0.000152	7.55	4895.32	6398.52	0.33
D100-00-00_0008	93213	1PCT_100yr	27682.00	32.26	61.06	50.79	61.84	0.000141	7.45	5306.37	8149.61	0.32
D100-00-00_0008	93213	0.2PCT_500yr	32325.00	32.26	62.09	52.15	62.96	0.000148	7.95	6002.06	11618.74	0.33
D100-00-00_0008	93199		Bridge									
D100-00-00_0008	93192	10PCT_10yr	23064.00	32.26	57.82		58.89	0.000242	8.39	3153.07	1199.38	0.41
D100-00-00_0008	93192	2PCT_50yr	26530.00	32.26	60.31		61.14	0.000157	7.58	4784.69	6383.33	0.34
D100-00-00_0008	93192	1PCT_100yr	27682.00	32.26	61.04		61.81	0.000141	7.41	5267.10	8304.30	0.32
D100-00-00_0008	93192	0.2PCT_500yr	32325.00	32.26	62.00		62.87	0.000151	7.95	5906.35	11626.31	0.34
D100-00-00_0008	92956	10PCT_10yr	23064.00	32.26	57.55		58.79	0.000250	8.94	2686.57	1204.47	0.42
D100-00-00_0008	92956	2PCT_50yr	26530.00	32.26	59.95		61.02	0.000185	8.47	3996.07	4985.16	0.37
D100-00-00_0008	92956	1PCT_100yr	27682.00	32.26	60.69		61.70	0.000167	8.29	4497.85	7673.91	0.35
D100-00-00_0008	92956	0.2PCT_500yr	32325.00	32.26	61.59		62.74	0.000184	8.98	5100.86	11069.18	0.37
D100-00-00_0008	92187	10PCT_10yr	23064.00	31.64	57.42		58.59	0.000216	8.71	2799.61	1245.83	0.39
D100-00-00_0008	92187	2PCT_50yr	26530.00	31.64	59.86		60.87	0.000160	8.26	4142.66	5849.87	0.34
D100-00-00_0008	92187	1PCT_100yr	27682.00	31.64	60.61		61.57	0.000145	8.11	4602.26	9531.59	0.33
D100-00-00_0008	92187	0.2PCT_500yr	32325.00	31.64	61.49		62.59	0.000162	8.82	5139.77	12436.21	0.35
D100-00-00_0008	91964	10PCT_10yr	23064.00	31.64	57.39	48.72	58.51	0.000248	8.53	2962.64	1511.23	0.41
D100-00-00_0008	91964	2PCT_50yr	26530.00	31.64	59.87	49.82	60.79	0.000172	7.88	4265.38	7297.59	0.35
D100-00-00_0008	91964	1PCT_100yr	27682.00	31.64	60.63	50.17	61.48	0.000154	7.70	4744.88	11042.02	0.34
D100-00-00_0008	91964	0.2PCT_500yr	32325.00	31.64	61.52	51.53	62.49	0.000168	8.33	5307.73	13313.22	0.35
D100-00-00_0008	91885		Bridge									
D100-00-00_0008	91807	10PCT_10yr	23064.00	31.64	56.69		57.97	0.000252	9.11	2720.57	986.04	0.42
D100-00-00_0008	91807	2PCT_50yr	26530.00	31.64	58.70		59.90	0.000205	8.95	3610.48	3477.97	0.39
D100-00-00_0008	91807	1PCT_100yr	27682.00	31.64	59.44		60.58	0.000186	8.79	4061.26	6053.50	0.37
D100-00-00_0008	91807	0.2PCT_500yr	32325.00	31.64	60.77		61.97	0.000184	9.18	4909.69	12403.11	0.37
D100-00-00_0008	91581	10PCT_10yr	23064.00	31.64	56.66		57.89	0.000247	9.01	3125.74	1105.74	0.41
D100-00-00_0008	91581	2PCT_50yr	26530.00	31.64	58.69		59.81	0.000195	8.74	4201.14	3709.12	0.38
D100-00-00_0008	91581	1PCT_100yr	27682.00	31.64	59.44		60.50	0.000177	8.57	4687.08	7866.38	0.36
D100-00-00_0008	91581	0.2PCT_500yr	32325.00	31.64	60.77		61.89	0.000176	8.96	5592.46	13261.61	0.36
D100-00-00_0008	91158	10PCT_10yr	23955.00	31.64	56.33		57.76	0.000292	9.65	2764.91	1151.19	0.45
D100-00-00_0008	91158	2PCT_50yr	28280.00	31.64	58.34		59.70	0.000242	9.59	3783.38	3185.63	0.42
D100-00-00_0008	91158	1PCT_100yr	29550.00	31.64	59.13		60.39	0.000216	9.35	4233.94	6366.39	0.40
D100-00-00_0008	91158	0.2PCT_500yr	33474.00	31.64	60.58		61.80	0.000195	9.37	5062.11	12380.70	0.38
D100-00-00_0008	90300	10PCT_10yr	23955.00	30.22	56.41		57.42	0.000212	8.31	3775.84	2636.87	0.38
D100-00-00_0008	90300	2PCT_50yr	28280.00	30.22	58.51		59.38	0.000163	7.98	5435.01	6584.93	0.35
D100-00-00_0008	90300	1PCT_100yr	29550.00	30.22	59.30		60.10	0.000144	7.74	6096.95	9085.50	0.33
D100-00-00_0008	90300	0.2PCT_500yr	33474.00	30.22	60.77		61.52	0.000128	7.71	7319.38	14779.59	0.31
D100-00-00_0008	90129	10PCT_10yr	23955.00	30.22	55.91	47.86	57.28	0.000263	9.38	2678.14	3083.73	0.43
D100-00-00_0008	90129	2PCT_50yr	28280.00	30.22	57.89	49.29	59.21	0.000224	9.41	3926.20	5708.03	0.40
D100-00-00_0008	90129	1PCT_100yr	29550.00	30.22	58.73	49.67	59.95	0.000198	9.14	4487.51	9949.97	0.38
D100-00-00_0008	90129	0.2PCT_500yr	33474.00	30.22	60.22	50.75	61.38	0.000178	9.12	5482.44	15579.91	0.37
D100-00-00_0008	90082		Bridge									
D100-00-00_0008	90035	10PCT_10yr	23955.00	30.22	55.65		57.07	0.000279	9.55	2571.96	2143.41	0.44
D100-00-00_0008	90035	2PCT_50yr	28280.00	30.22	57.17		58.70	0.000270	10.02	3401.06	5019.14	0.44
D100-00-00_0008	90035	1PCT_100yr	29550.00	30.22	57.88		59.34	0.000246	9.85	3861.86	6843.09	0.42
D100-00-00_0008	90035	0.2PCT_500yr	33474.00	30.22	59.32		60.72	0.000221	9.87	4789.40	11217.50	0.41
D100-00-00_0008	89871	10PCT_10yr	23955.00	30.22	55.68		56.95	0.000307	9.05	2869.82	1846.61	0.45
D100-00-00_0008	89871	2PCT_50yr	28280.00	30.22	57.27		58.52	0.000268	9.16	3841.14	4311.38	0.43
D100-00-00_0008	89871	1PCT_100yr	29550.00	30.22	57.99		59.15	0.000237	8.92	4303.13	5972.07	0.41
D100-00-00_0008	89871	0.2PCT_500yr	33474.00	30.22	59.44		60.53	0.000205	8.82	5228.69	10258.29	0.39

HEC-RAS Plan: RevEx River: D100-00-00 Reach: D100-00-00_0008 (Continued)

Reach	River Sta	Profile	Q Total	Min Ch El	W.S. Elev	Crit W.S.	E.G. Elev	E.G. Slope	Vel Chnl	Flow Area	Top Width	Froude # Chl
			(cfs)	(ft)	(ft)	(ft)	(ft)	(ft/ft)	(ft/s)	(sq ft)	(ft)	
D100-00-00_0008	89051	10PCT_10yr	23955.00	30.13	55.37		56.70	0.000274	9.38	3132.40	2120.86	0.44
D100-00-00_0008	89051	2PCT_50yr	28280.00	30.13	57.06		58.31	0.000238	9.34	4322.95	5647.41	0.41
D100-00-00_0008	89051	1PCT_100yr	29550.00	30.13	57.82		58.96	0.000210	9.05	4860.86	7326.68	0.39
D100-00-00_0008	89051	0.2PCT_500yr	33474.00	30.13	59.31		60.36	0.000182	8.92	5912.73	11354.46	0.37
D100-00-00_0008	87656	10PCT_10yr	24837.00	29.34	55.18		56.29	0.000227	8.73	3883.81	1812.06	0.40
D100-00-00_0008	87656	2PCT_50yr	30057.00	29.34	56.87		57.95	0.000206	8.91	5031.27	5031.74	0.39
D100-00-00_0008	87656	1PCT_100yr	31449.00	29.34	57.65		58.65	0.000182	8.64	5565.38	7507.24	0.37
D100-00-00_0008	87656	0.2PCT_500yr	34608.00	29.34	59.21		60.08	0.000148	8.26	6625.46	13521.13	0.34
D100-00-00_0008	86813	10PCT_10yr	24837.00	28.88	54.76		56.06	0.000263	9.25	3193.79	1523.37	0.43
D100-00-00_0008	86813	2PCT_50yr	30057.00	28.88	56.39		57.74	0.000249	9.64	4314.95	5890.51	0.42
D100-00-00_0008	86813	1PCT_100yr	31449.00	28.88	57.23		58.46	0.000218	9.33	4922.47	7804.49	0.40
D100-00-00_0008	86813	0.2PCT_500yr	34608.00	28.88	58.87		59.92	0.000174	8.86	6115.90	15006.77	0.36
D100-00-00_0008	86516	10PCT_10yr	24837.00	28.88	54.74	46.47	55.94	0.000221	9.02	3785.50	1837.62	0.40
D100-00-00_0008	86516	2PCT_50yr	30057.00	28.88	56.37	48.07	57.61	0.000213	9.42	4908.11	6652.46	0.39
D100-00-00_0008	86516	1PCT_100yr	31449.00	28.88	57.21	48.45	58.35	0.000189	9.17	5485.45	9424.21	0.38
D100-00-00_0008	86516	0.2PCT_500yr	34608.00	28.88	58.84	49.31	59.85	0.000156	8.81	6617.50	16516.21	0.35
D100-00-00_0008	86508		Bridge									
D100-00-00_0008	86501	10PCT_10yr	24837.00	28.88	54.72		55.89	0.000219	8.97	3847.07	1867.12	0.39
D100-00-00_0008	86501	2PCT_50yr	30057.00	28.88	56.19		57.44	0.000218	9.48	4974.70	6017.20	0.40
D100-00-00_0008	86501	1PCT_100yr	31449.00	28.88	57.00		58.14	0.000193	9.19	5613.02	8722.28	0.38
D100-00-00_0008	86501	0.2PCT_500yr	34608.00	28.88	58.50		59.51	0.000161	8.85	6794.08	15336.05	0.35
D100-00-00_0008	86325	10PCT_10yr	24837.00	28.88	54.69		55.83	0.000236	8.85	3954.74	1890.03	0.41
D100-00-00_0008	86325	2PCT_50yr	30057.00	28.88	56.19		57.36	0.000223	9.17	5170.38	6641.44	0.40
D100-00-00_0008	86325	1PCT_100yr	31449.00	28.88	57.01		58.06	0.000195	8.86	5831.90	9997.16	0.38
D100-00-00_0008	86325	0.2PCT_500yr	34608.00	28.88	58.52		59.44	0.000160	8.49	7052.12	17275.31	0.35
D100-00-00_0008	85870	10PCT_10yr	24837.00	27.65	54.71		55.68	0.000205	8.23	4444.14	3175.57	0.38
D100-00-00_0008	85870	2PCT_50yr	30057.00	27.65	56.20		57.22	0.000198	8.60	5609.88	9535.37	0.38
D100-00-00_0008	85870	1PCT_100yr	31449.00	27.65	57.01		57.95	0.000175	8.36	6241.73	12467.88	0.36
D100-00-00_0008	85870	0.2PCT_500yr	34608.00	27.65	58.50		59.35	0.000146	8.09	7409.51	17792.51	0.33
D100-00-00_0008	84732	10PCT_10yr	24837.00	27.58	54.55		55.45	0.000173	7.85	4212.13	8002.38	0.35
D100-00-00_0008	84732	2PCT_50yr	30057.00	27.58	56.02		57.00	0.000173	8.33	5128.86	16093.12	0.36
D100-00-00_0008	84732	1PCT_100yr	31449.00	27.58	56.84		57.75	0.000155	8.13	5640.28	20788.35	0.34
D100-00-00_0008	84732	0.2PCT_500yr	34608.00	27.58	58.35		59.19	0.000132	7.94	6580.37	23548.33	0.32
D100-00-00_0008	84532	10PCT_10yr	24837.00	27.58	54.52		55.41	0.000175	7.85	4331.75	11036.00	0.35
D100-00-00_0008	84532	2PCT_50yr	30057.00	27.58	55.99		56.96	0.000174	8.32	5223.22	18630.50	0.36
D100-00-00_0008	84532	1PCT_100yr	31449.00	27.58	56.82		57.71	0.000155	8.11	5722.02	21979.09	0.34
D100-00-00_0008	84532	0.2PCT_500yr	34608.00	27.58	58.33		59.16	0.000133	7.92	6637.16	24683.54	0.32
D100-00-00_0008	84469	10PCT_10yr	24837.00	27.58	54.52	45.20	55.39	0.000173	7.79	4575.45	13533.82	0.35
D100-00-00_0008	84469	2PCT_50yr	30057.00	27.58	55.99	46.82	56.93	0.000172	8.26	5501.41	18546.44	0.35
D100-00-00_0008	84469	1PCT_100yr	31449.00	27.58	56.82	47.24	57.69	0.000153	8.06	6019.65	21738.51	0.34
D100-00-00_0008	84469	0.2PCT_500yr	34608.00	27.58	58.33	48.14	59.14	0.000131	7.86	6970.24	24663.57	0.32
D100-00-00_0008	84448		Bridge									
D100-00-00_0008	84427	10PCT_10yr	24837.00	27.58	53.89	45.20	55.00	0.000221	8.57	3564.04	14606.24	0.39
D100-00-00_0008	84427	2PCT_50yr	30057.00	27.58	55.52	46.77	56.64	0.000203	8.83	4811.61	19599.55	0.38
D100-00-00_0008	84427	1PCT_100yr	31449.00	27.58	56.51	47.16	57.48	0.000170	8.39	5568.33	22640.81	0.35
D100-00-00_0008	84427	0.2PCT_500yr	34608.00	27.58	58.06	47.96	58.91	0.000138	8.01	6755.86	24014.93	0.32
D100-00-00_0008	84400		Bridge									
D100-00-00_0008	84374	10PCT_10yr	24837.00	26.85	53.13		54.37	0.000245	9.01	3344.25	7765.53	0.41
D100-00-00_0008	84374	2PCT_50yr	30057.00	26.85	55.10		56.32	0.000215	9.18	4502.86	17536.83	0.39
D100-00-00_0008	84374	1PCT_100yr	31449.00	26.85	56.23		57.30	0.000179	8.74	5167.28	19287.59	0.36
D100-00-00_0008	84374	0.2PCT_500yr	34608.00	26.85	57.61		58.63	0.000158	8.62	5984.71	23068.73	0.35
D100-00-00_0008	84315	10PCT_10yr	25294.00	26.85	53.01		54.33	0.000263	9.30	3160.66	5926.32	0.43
D100-00-00_0008	84315	2PCT_50yr	31219.00	26.85	54.88		56.26	0.000246	9.73	4290.08	15523.59	0.42
D100-00-00_0008	84315	1PCT_100yr	32975.00	26.85	56.01		57.25	0.000207	9.33	4975.57	17978.67	0.39
D100-00-00_0008	84315	0.2PCT_500yr	37060.00	26.85	57.34		58.56	0.000191	9.41	5778.82	21726.51	0.38
D100-00-00_0008	84147	10PCT_10yr	25294.00	26.85	52.97		54.28	0.000280	9.26	3104.94	2817.30	0.44
D100-00-00_0008	84147	2PCT_50yr	31219.00	26.85	54.85		56.21	0.000256	9.64	4242.64	12313.90	0.43
D100-00-00_0008	84147	1PCT_100yr	32975.00	26.85	56.01		57.20	0.000210	9.15	5022.66	17118.87	0.39
D100-00-00_0008	84147	0.2PCT_500yr	37060.00	26.85	57.37		58.50	0.000189	9.13	5931.38	20426.18	0.38
D100-00-00_0008	83257	10PCT_10yr	25294.00	26.31	52.89		54.00	0.000215	8.62	3608.83	3934.62	0.39
D100-00-00_0008	83257	2PCT_50yr	31219.00	26.31	54.79		55.95	0.000199	8.98	4798.20	14759.39	0.38
D100-00-00_0008	83257	1PCT_100yr	32975.00	26.31	55.95		56.98	0.000168	8.60	5523.42	18243.12	0.36
D100-00-00_0008	83257	0.2PCT_500yr	37060.00	26.31	57.30		58.31	0.000156	8.70	6361.38	21047.90	0.35

HEC-RAS Plan: RevEx River: D100-00-00 Reach: D100-00-00_0008 (Continued)

Reach	River Sta	Profile	Q Total	Min Ch El	W.S. Elev	Crit W.S.	E.G. Elev	E.G. Slope	Vel Chnl	Flow Area	Top Width	Froude # Chl
			(cfs)	(ft)	(ft)	(ft)	(ft)	(ft/ft)	(ft/s)	(sq ft)	(ft)	
D100-00-00_0008	82292	10PCT_10yr	25294.00	26.24	52.50		53.76	0.000246	9.16	3339.64	4529.57	0.42
D100-00-00_0008	82292	2PCT_50yr	31219.00	26.24	54.41		55.72	0.000228	9.56	4544.79	16221.17	0.41
D100-00-00_0008	82292	1PCT_100yr	32975.00	26.24	55.66		56.80	0.000186	9.05	5370.76	19780.63	0.37
D100-00-00_0008	82292	0.2PCT_500yr	37060.00	26.24	57.05		58.15	0.000170	9.07	6281.73	21794.63	0.36
D100-00-00_0008	81768	10PCT_10yr	24395.00	25.72	52.67		53.52	0.000204	7.68	4341.29	6523.88	0.37
D100-00-00_0008	81768	2PCT_50yr	29368.00	25.72	54.67		55.47	0.000165	7.60	5709.59	17909.13	0.34
D100-00-00_0008	81768	1PCT_100yr	30973.00	25.72	55.89		56.59	0.000133	7.19	6544.43	19953.33	0.31
D100-00-00_0008	81768	0.2PCT_500yr	34591.00	25.72	57.27		57.95	0.000119	7.17	7488.99	22051.66	0.30
D100-00-00_0008	81600	10PCT_10yr	24395.00	25.72	52.56	43.44	53.48	0.000176	7.96	4326.45	8628.72	0.35
D100-00-00_0008	81600	2PCT_50yr	29368.00	25.72	54.56	44.94	55.42	0.000150	7.96	5649.88	18386.17	0.33
D100-00-00_0008	81600	1PCT_100yr	30973.00	25.72	55.80	45.40	56.55	0.000123	7.56	6469.32	21435.30	0.31
D100-00-00_0008	81600	0.2PCT_500yr	34591.00	25.72	57.19	46.37	57.91	0.000113	7.56	7387.97	21887.80	0.30
D100-00-00_0008	81504		Bridge									
D100-00-00_0008	81408	10PCT_10yr	24395.00	25.72	51.80		52.96	0.000228	8.78	3621.89	5040.71	0.40
D100-00-00_0008	81408	2PCT_50yr	29368.00	25.72	53.97		54.99	0.000183	8.59	5092.78	14270.73	0.37
D100-00-00_0008	81408	1PCT_100yr	30973.00	25.72	55.40		56.25	0.000141	7.97	6070.70	19105.20	0.33
D100-00-00_0008	81408	0.2PCT_500yr	34591.00	25.72	56.81		57.61	0.000126	7.91	7027.68	21222.71	0.31
D100-00-00_0008	81251	10PCT_10yr	24395.00	25.72	51.63		52.89	0.000242	9.09	3183.72	3808.90	0.41
D100-00-00_0008	81251	2PCT_50yr	29368.00	25.72	53.71		54.91	0.000205	9.12	4538.16	13208.07	0.39
D100-00-00_0008	81251	1PCT_100yr	30973.00	25.72	55.19		56.18	0.000158	8.46	5525.52	18394.33	0.34
D100-00-00_0008	81251	0.2PCT_500yr	34591.00	25.72	56.60		57.55	0.000142	8.43	6466.98	20997.77	0.33
D100-00-00_0008	80787	10PCT_10yr	24395.00	25.49	51.58		52.75	0.000232	8.84	3555.51	3346.44	0.40
D100-00-00_0008	80787	2PCT_50yr	29368.00	25.49	53.70		54.78	0.000192	8.77	4921.29	13125.39	0.37
D100-00-00_0008	80787	1PCT_100yr	30973.00	25.49	55.19		56.08	0.000148	8.15	5885.27	18931.45	0.33
D100-00-00_0008	80787	0.2PCT_500yr	34591.00	25.49	56.60		57.46	0.000134	8.13	6801.34	21186.13	0.32
D100-00-00_0008	80203	10PCT_10yr	24395.00	25.17	51.40		52.61	0.000231	8.91	3211.90	4342.17	0.40
D100-00-00_0008	80203	2PCT_50yr	29368.00	25.17	53.49		54.66	0.000197	8.96	4342.13	13147.24	0.38
D100-00-00_0008	80203	1PCT_100yr	30973.00	25.17	55.00		55.98	0.000154	8.37	5158.94	19108.76	0.34
D100-00-00_0008	80203	0.2PCT_500yr	34591.00	25.17	56.40		57.36	0.000141	8.41	5919.11	21185.59	0.33
D100-00-00_0008	79216	10PCT_10yr	23525.00	24.45	51.49		52.30	0.000162	7.58	4845.40	5732.17	0.34
D100-00-00_0008	79216	2PCT_50yr	27623.00	24.45	53.65		54.36	0.000128	7.34	6355.71	17256.21	0.31
D100-00-00_0008	79216	1PCT_100yr	29090.00	24.45	55.14		55.74	0.000100	6.85	7400.40	20628.45	0.28
D100-00-00_0008	79216	0.2PCT_500yr	32283.00	24.45	56.56		57.14	0.000091	6.84	8388.97	21367.42	0.27
D100-00-00_0008	78674	10PCT_10yr	23525.00	24.06	51.35	41.41	52.20	0.000162	7.66	4321.03	9004.43	0.34
D100-00-00_0008	78674	2PCT_50yr	27623.00	24.06	53.59	42.68	54.28	0.000120	7.20	6015.15	17663.73	0.30
D100-00-00_0008	78674	1PCT_100yr	29090.00	24.06	55.12	43.11	55.67	0.000091	6.61	7163.93	19475.60	0.26
D100-00-00_0008	78674	0.2PCT_500yr	32283.00	24.06	56.54	44.02	57.06	0.000080	6.51	8242.89	21459.05	0.25
D100-00-00_0008	78652		Bridge									
D100-00-00_0008	78631	10PCT_10yr	23525.00	24.06	51.06		52.01	0.000181	8.00	3867.44	6249.63	0.36
D100-00-00_0008	78631	2PCT_50yr	27623.00	24.06	53.30		54.08	0.000135	7.56	5470.48	16609.09	0.32
D100-00-00_0008	78631	1PCT_100yr	29090.00	24.06	54.85		55.47	0.000102	6.93	6574.51	18879.39	0.28
D100-00-00_0008	78631	0.2PCT_500yr	32283.00	24.06	56.28		56.86	0.000090	6.83	7598.25	21079.03	0.26
D100-00-00_0008	78563	10PCT_10yr	23525.00	24.06	51.00	41.40	51.98	0.000188	8.12	3671.85	2357.93	0.36
D100-00-00_0008	78563	2PCT_50yr	27623.00	24.06	53.23	42.68	54.06	0.000142	7.73	5251.23	9859.64	0.32
D100-00-00_0008	78563	1PCT_100yr	29090.00	24.06	54.78	43.11	55.45	0.000107	7.09	6381.55	16536.41	0.28
D100-00-00_0008	78563	0.2PCT_500yr	32283.00	24.06	56.22	44.02	56.84	0.000095	6.99	7454.75	19313.30	0.27
D100-00-00_0008	78540		Bridge									
D100-00-00_0008	78518	10PCT_10yr	23525.00	23.83	49.67		50.64	0.000185	8.00	3493.68	1029.34	0.36
D100-00-00_0008	78518	2PCT_50yr	27623.00	23.83	51.98		52.80	0.000145	7.58	5169.97	5164.22	0.33
D100-00-00_0008	78518	1PCT_100yr	29090.00	23.83	53.56		54.21	0.000107	6.92	6367.01	10928.22	0.28
D100-00-00_0008	78518	0.2PCT_500yr	32283.00	23.83	55.00		55.60	0.000094	6.80	7477.08	17994.76	0.27
D100-00-00_0008	78493	10PCT_10yr	23525.00	23.83	49.67	40.16	50.64	0.000182	8.01	3517.55	1031.08	0.36
D100-00-00_0008	78493	2PCT_50yr	27623.00	23.83	51.97	41.44	52.79	0.000138	7.60	5227.12	5481.67	0.32
D100-00-00_0008	78493	1PCT_100yr	29090.00	23.83	53.56	41.86	54.20	0.000103	6.95	6422.14	11812.44	0.28
D100-00-00_0008	78493	0.2PCT_500yr	32283.00	23.83	54.99	42.74	55.59	0.000091	6.84	7516.48	17822.02	0.27
D100-00-00_0008	78463		Bridge									
D100-00-00_0008	78440	10PCT_10yr	23525.00	23.83	49.50		50.49	0.000188	8.08	3368.93	975.24	0.36
D100-00-00_0008	78440	2PCT_50yr	27623.00	23.83	51.90		52.73	0.000141	7.64	5185.29	7126.77	0.32
D100-00-00_0008	78440	1PCT_100yr	29090.00	23.83	53.50		54.15	0.000104	6.97	6427.38	15326.20	0.28
D100-00-00_0008	78440	0.2PCT_500yr	32283.00	23.83	54.93		55.53	0.000091	6.84	7542.97	18508.06	0.27
D100-00-00_0008	78396	10PCT_10yr	23525.00	23.83	49.48	40.16	50.48	0.000192	8.13	3335.37	1768.27	0.37
D100-00-00_0008	78396	2PCT_50yr	27623.00	23.83	51.90	41.44	52.72	0.000145	7.64	5251.81	9826.80	0.33

HEC-RAS Plan: RevEx River: D100-00-00 Reach: D100-00-00_0008 (Continued)

Reach	River Sta	Profile	Q Total	Min Ch El	W.S. Elev	Crit W.S.	E.G. Elev	E.G. Slope	Vel Chnl	Flow Area	Top Width	Froude # Chl
			(cfs)	(ft)	(ft)	(ft)	(ft)	(ft/ft)	(ft/s)	(sq ft)	(ft)	
D100-00-00_0008	78396	1PCT_100yr	29090.00	23.83	53.50	41.86	54.14	0.000105	6.90	6627.02	16036.10	0.28
D100-00-00_0008	78396	0.2PCT_500yr	32283.00	23.83	54.94	42.74	55.52	0.000091	6.74	7861.40	18680.13	0.26
D100-00-00_0008	78365		Bridge									
D100-00-00_0008	78334	10PCT_10yr	23525.00	23.83	49.31	40.16	50.35	0.000198	8.25	3354.09	2246.71	0.37
D100-00-00_0008	78334	2PCT_50yr	27623.00	23.83	51.83	41.44	52.63	0.000139	7.59	5541.11	7050.42	0.32
D100-00-00_0008	78334	1PCT_100yr	29090.00	23.83	53.45	41.86	54.05	0.000099	6.80	7038.30	15982.87	0.27
D100-00-00_0008	78334	0.2PCT_500yr	32283.00	23.83	54.83	42.73	55.37	0.000086	6.64	8314.89	19469.80	0.26
D100-00-00_0008	78311		Bridge									
D100-00-00_0008	78288	10PCT_10yr	23525.00	23.83	49.07	40.16	50.16	0.000210	8.43	3186.90	1869.60	0.38
D100-00-00_0008	78288	2PCT_50yr	27623.00	23.83	51.59	41.44	52.45	0.000150	7.81	5140.21	5595.95	0.33
D100-00-00_0008	78288	1PCT_100yr	29090.00	23.83	53.22	41.86	53.88	0.000109	7.05	6552.88	14509.27	0.29
D100-00-00_0008	78288	0.2PCT_500yr	32283.00	23.83	54.55	42.73	55.17	0.000097	6.97	7760.28	19179.71	0.27
D100-00-00_0008	78258		Bridge									
D100-00-00_0008	78228	10PCT_10yr	23525.00	23.76	48.85		49.97	0.000278	8.53	3009.25	1136.55	0.43
D100-00-00_0008	78228	2PCT_50yr	27623.00	23.76	51.48		52.26	0.000174	7.42	5349.94	4768.39	0.35
D100-00-00_0008	78228	1PCT_100yr	29090.00	23.76	53.17		53.73	0.000114	6.49	6919.78	14430.58	0.29
D100-00-00_0008	78228	0.2PCT_500yr	32283.00	23.76	54.53		55.03	0.000096	6.29	8184.66	19082.71	0.27
D100-00-00_0008	78126	10PCT_10yr	23525.00	23.76	48.66		49.90	0.000280	8.97	2779.54	664.46	0.44
D100-00-00_0008	78126	2PCT_50yr	27623.00	23.76	51.33		52.21	0.000195	7.89	5181.76	4678.95	0.37
D100-00-00_0008	78126	1PCT_100yr	29090.00	23.76	53.11		53.71	0.000121	6.74	7078.03	14616.21	0.30
D100-00-00_0008	78126	0.2PCT_500yr	32283.00	23.76	54.51		55.02	0.000099	6.44	8556.01	18302.68	0.27
D100-00-00_0008	77983	10PCT_10yr	23525.00	23.76	48.57		49.86	0.000260	9.13	2780.02	717.13	0.42
D100-00-00_0008	77983	2PCT_50yr	27623.00	23.76	51.02		52.16	0.000201	8.75	5038.53	4465.14	0.38
D100-00-00_0008	77983	1PCT_100yr	29090.00	23.76	52.79		53.66	0.000141	7.84	6980.34	13213.90	0.32
D100-00-00_0008	77983	0.2PCT_500yr	32283.00	23.76	54.17		54.97	0.000124	7.74	8479.90	17542.32	0.31
D100-00-00_0008	77323	10PCT_10yr	22901.00	23.55	48.49		49.66	0.000232	8.70	2920.53	969.93	0.40
D100-00-00_0008	77323	2PCT_50yr	26396.00	23.55	51.04		51.98	0.000164	8.03	5311.11	4878.26	0.35
D100-00-00_0008	77323	1PCT_100yr	27767.00	23.55	52.82		53.53	0.000115	7.20	7486.30	14708.63	0.29
D100-00-00_0008	77323	0.2PCT_500yr	30670.00	23.55	54.20		54.85	0.000101	7.06	9260.04	18608.19	0.28
D100-00-00_0008	76284	10PCT_10yr	22901.00	23.18	48.31		49.40	0.000220	8.45	3655.45	1656.07	0.39
D100-00-00_0008	76284	2PCT_50yr	26396.00	23.18	50.98		51.78	0.000142	7.55	7228.82	7301.97	0.32
D100-00-00_0008	76284	1PCT_100yr	27767.00	23.18	52.80		53.38	0.000097	6.68	9776.76	15904.18	0.27
D100-00-00_0008	76284	0.2PCT_500yr	30670.00	23.18	54.19		54.72	0.000084	6.53	11724.29	18499.09	0.26
D100-00-00_0008	76075	10PCT_10yr	22901.00	22.97	48.20		49.35	0.000225	8.63	2683.50	696.44	0.40
D100-00-00_0008	76075	2PCT_50yr	26396.00	22.97	50.72		51.72	0.000173	8.18	5109.02	7604.92	0.35
D100-00-00_0008	76075	1PCT_100yr	27767.00	22.97	52.58		53.34	0.000121	7.34	7400.08	15034.91	0.30
D100-00-00_0008	76075	0.2PCT_500yr	30670.00	22.97	53.97		54.69	0.000107	7.24	9119.78	17456.94	0.29
D100-00-00_0008	75709	10PCT_10yr	22381.00	22.49	48.22		49.23	0.000215	8.04	2783.98	1046.35	0.38
D100-00-00_0008	75709	2PCT_50yr	25393.00	22.49	50.75		51.62	0.000165	7.55	3639.92	6463.56	0.34
D100-00-00_0008	75709	1PCT_100yr	26686.00	22.49	52.56		53.29	0.000119	6.93	4518.73	14194.12	0.30
D100-00-00_0008	75709	0.2PCT_500yr	29359.00	22.49	53.94		54.64	0.000106	6.90	5286.01	18140.77	0.28
D100-00-00_0008	75383	10PCT_10yr	22381.00	22.49	48.18	38.76	49.12	0.000209	7.79	2922.55	1548.78	0.38
D100-00-00_0008	75383	2PCT_50yr	25393.00	22.49	50.76	39.80	51.51	0.000152	7.05	4387.44	6665.67	0.33
D100-00-00_0008	75383	1PCT_100yr	26686.00	22.49	52.61	40.17	53.16	0.000100	6.20	5948.26	13600.80	0.27
D100-00-00_0008	75383	0.2PCT_500yr	29359.00	22.49	54.01	41.02	54.51	0.000084	6.01	7130.22	18185.79	0.25
D100-00-00_0008	75295		Bridge									
D100-00-00_0008	75208	10PCT_10yr	22381.00	22.49	47.99		48.83	0.000220	7.45	3428.34	1589.16	0.38
D100-00-00_0008	75208	2PCT_50yr	25393.00	22.49	50.37		51.01	0.000149	6.68	4713.85	5975.27	0.32
D100-00-00_0008	75208	1PCT_100yr	26686.00	22.49	52.30		52.78	0.000096	5.86	6096.34	13231.64	0.26
D100-00-00_0008	75208	0.2PCT_500yr	29359.00	22.49	53.83		54.26	0.000079	5.66	7191.28	18522.90	0.24
D100-00-00_0008	75002	10PCT_10yr	22381.00	22.49	47.73		48.73	0.000219	8.04	2793.64	1322.02	0.39
D100-00-00_0008	75002	2PCT_50yr	25393.00	22.49	49.96		50.89	0.000168	7.77	3439.74	4893.08	0.35
D100-00-00_0008	75002	1PCT_100yr	26686.00	22.49	51.89		52.66	0.000122	7.15	4273.74	10076.05	0.30
D100-00-00_0008	75002	0.2PCT_500yr	29359.00	22.49	53.39		54.15	0.000108	7.11	5012.61	15384.61	0.29
D100-00-00_0008	74085	10PCT_10yr	22381.00	21.89	47.50		48.54	0.000197	8.17	2740.68	423.25	0.37
D100-00-00_0008	74085	2PCT_50yr	25393.00	21.89	49.79		50.74	0.000156	7.90	3697.49	6522.71	0.34
D100-00-00_0008	74085	1PCT_100yr	26686.00	21.89	51.80		52.55	0.000110	7.15	4971.34	11003.82	0.29
D100-00-00_0008	74085	0.2PCT_500yr	29359.00	21.89	53.33		54.04	0.000097	7.04	5961.77	17009.49	0.27
D100-00-00_0008	73862	10PCT_10yr	22381.00	21.54	47.61	37.60	48.35	0.000133	6.89	3250.41	216.81	0.31
D100-00-00_0008	73862	2PCT_50yr	25393.00	21.54	49.88	38.39	50.60	0.000109	6.82	3723.24	441.42	0.28
D100-00-00_0008	73862	1PCT_100yr	26686.00	21.54	51.83	38.72	52.48	0.000085	6.46	4131.02	7689.33	0.26
D100-00-00_0008	73862	0.2PCT_500yr	29359.00	21.54	53.32	39.37	54.00	0.000081	6.61	4443.47	13162.89	0.25

HEC-RAS Plan: RevEx River: D100-00-00 Reach: D100-00-00_0008 (Continued)

Reach	River Sta	Profile	Q Total	Min Ch El	W.S. Elev	Crit W.S.	E.G. Elev	E.G. Slope	Vel Chnl	Flow Area	Top Width	Froude # Chl
			(cfs)	(ft)	(ft)	(ft)	(ft)	(ft/ft)	(ft/s)	(sq ft)	(ft)	
D100-00-00_0008	73836		Bridge									
D100-00-00_0008	73817	10PCT_10yr	22381.00	21.29	47.25		48.21	0.000181	7.86	2849.00	189.24	0.36
D100-00-00_0008	73817	2PCT_50yr	25393.00	21.29	49.54		50.46	0.000157	7.70	3298.82	274.92	0.34
D100-00-00_0008	73817	1PCT_100yr	26686.00	21.29	51.36		52.18	0.000125	7.26	3677.97	7085.25	0.30
D100-00-00_0008	73817	0.2PCT_500yr	29359.00	21.29	52.68		53.54	0.000119	7.42	3954.96	15316.52	0.30
D100-00-00_0008	73738	10PCT_10yr	26114.00	21.29	46.64		48.06	0.000275	9.55	2733.72	185.75	0.44
D100-00-00_0008	73738	2PCT_50yr	29396.00	21.29	49.02		50.33	0.000222	9.19	3353.70	1743.70	0.40
D100-00-00_0008	73738	1PCT_100yr	31702.00	21.29	50.92		52.07	0.000172	8.69	4188.51	6276.32	0.36
D100-00-00_0008	73738	0.2PCT_500yr	35991.00	21.29	52.20		53.42	0.000171	9.05	4769.56	13866.43	0.36
D100-00-00_0008	73591	10PCT_10yr	26114.00	21.29	46.61		48.01	0.000289	9.47	2757.21	197.80	0.45
D100-00-00_0008	73591	2PCT_50yr	29396.00	21.29	49.03		50.28	0.000223	8.97	3468.76	1698.52	0.40
D100-00-00_0008	73591	1PCT_100yr	31702.00	21.29	50.96		52.02	0.000167	8.38	4563.48	8599.75	0.35
D100-00-00_0008	73591	0.2PCT_500yr	35991.00	21.29	52.27		53.35	0.000160	8.61	5367.60	14832.84	0.35
D100-00-00_0008	73154	10PCT_10yr	26114.00	20.93	46.42		47.88	0.000278	9.68	2701.11	204.41	0.44
D100-00-00_0008	73154	2PCT_50yr	29396.00	20.93	48.83		50.17	0.000219	9.31	3324.64	2121.05	0.40
D100-00-00_0008	73154	1PCT_100yr	31702.00	20.93	50.77		51.93	0.000168	8.78	4487.52	8732.09	0.36
D100-00-00_0008	73154	0.2PCT_500yr	35991.00	20.93	52.08		53.27	0.000162	9.02	5462.89	14267.25	0.35
D100-00-00_0008	72530	10PCT_10yr	26114.00	20.36	46.33		47.68	0.000249	9.30	2810.50	265.69	0.42
D100-00-00_0008	72530	2PCT_50yr	29396.00	20.36	48.79		50.01	0.000193	8.90	3664.82	3159.90	0.38
D100-00-00_0008	72530	1PCT_100yr	31702.00	20.36	50.76		51.80	0.000147	8.33	4806.85	10096.50	0.33
D100-00-00_0008	72530	0.2PCT_500yr	35991.00	20.36	52.08		53.14	0.000143	8.59	5615.38	14905.44	0.33
D100-00-00_0008	71311	10PCT_10yr	26114.00	19.02	46.18		47.36	0.000200	8.73	3165.62	686.52	0.38
D100-00-00_0008	71311	2PCT_50yr	29396.00	19.02	48.70		49.75	0.000151	8.33	4884.11	3996.97	0.34
D100-00-00_0008	71311	1PCT_100yr	31702.00	19.02	50.71		51.59	0.000115	7.79	6702.49	10732.48	0.30
D100-00-00_0008	71311	0.2PCT_500yr	35991.00	19.02	52.03		52.94	0.000114	8.06	7893.04	15054.86	0.30
D100-00-00_0008	71113	10PCT_10yr	26114.00	19.02	46.13	36.64	47.32	0.000203	8.76	3122.84	613.94	0.38
D100-00-00_0008	71113	2PCT_50yr	29396.00	19.02	48.67	37.65	49.71	0.000150	8.31	4784.71	3945.87	0.34
D100-00-00_0008	71113	1PCT_100yr	31702.00	19.02	50.70	38.28	51.56	0.000113	7.72	6568.39	10702.53	0.30
D100-00-00_0008	71113	0.2PCT_500yr	35991.00	19.02	52.02	39.42	52.91	0.000111	7.96	7733.68	15031.28	0.30
D100-00-00_0008	71063		Bridge									
D100-00-00_0008	71014	10PCT_10yr	26114.00	19.02	45.49		46.79	0.000232	9.12	2920.73	319.29	0.41
D100-00-00_0008	71014	2PCT_50yr	29396.00	19.02	47.55		48.78	0.000190	8.96	4025.93	2300.25	0.37
D100-00-00_0008	71014	1PCT_100yr	31702.00	19.02	49.60		50.63	0.000142	8.33	5805.95	6447.55	0.33
D100-00-00_0008	71014	0.2PCT_500yr	35991.00	19.02	51.84		52.72	0.000112	7.95	7920.10	14481.63	0.30
D100-00-00_0008	70828	10PCT_10yr	25730.00	19.02	45.47		46.72	0.000225	8.99	3003.91	393.76	0.40
D100-00-00_0008	70828	2PCT_50yr	28684.00	19.02	47.55		48.70	0.000178	8.69	4179.96	1841.40	0.36
D100-00-00_0008	70828	1PCT_100yr	30653.00	19.02	49.63		50.55	0.000129	7.97	6099.14	6985.22	0.32
D100-00-00_0008	70828	0.2PCT_500yr	34589.00	19.02	51.86		52.66	0.000102	7.60	8349.61	14324.53	0.29
D100-00-00_0008	69468	10PCT_10yr	25730.00	19.02	45.11		46.40	0.000241	9.15	3304.55	928.76	0.41
D100-00-00_0008	69468	2PCT_50yr	28684.00	19.02	47.35		48.45	0.000177	8.60	4939.44	2732.88	0.36
D100-00-00_0008	69468	1PCT_100yr	30653.00	19.02	49.51		50.36	0.000123	7.75	6906.47	7668.79	0.31
D100-00-00_0008	69468	0.2PCT_500yr	34589.00	19.02	51.79		52.50	0.000096	7.35	9107.55	15143.54	0.28
D100-00-00_0008	68548	10PCT_10yr	25433.00	18.53	44.93		46.17	0.000226	8.96	3046.74	400.48	0.40
D100-00-00_0008	68548	2PCT_50yr	28138.00	18.53	47.20		48.28	0.000170	8.45	4305.94	1832.41	0.35
D100-00-00_0008	68548	1PCT_100yr	29855.00	18.53	49.43		50.24	0.000115	7.53	6270.26	7295.00	0.30
D100-00-00_0008	68548	0.2PCT_500yr	33530.00	18.53	51.73		52.41	0.000089	7.11	8328.42	14688.52	0.27
D100-00-00_0008	67310	10PCT_10yr	25433.00	17.70	44.70		45.88	0.000216	8.73	2972.27	427.27	0.39
D100-00-00_0008	67310	2PCT_50yr	28138.00	17.70	47.02		48.06	0.000169	8.24	4522.04	2636.58	0.35
D100-00-00_0008	67310	1PCT_100yr	29855.00	17.70	49.30		50.09	0.000114	7.35	6852.09	9112.70	0.29
D100-00-00_0008	67310	0.2PCT_500yr	33530.00	17.70	51.64		52.30	0.000087	6.92	9409.39	14841.82	0.26
D100-00-00_0008	66074	10PCT_10yr	25114.00	17.22	44.48		45.61	0.000199	8.51	2972.45	548.92	0.38
D100-00-00_0008	66074	2PCT_50yr	27557.00	17.22	46.86		47.84	0.000158	7.98	3817.43	2905.56	0.34
D100-00-00_0008	66074	1PCT_100yr	29013.00	17.22	49.19		49.95	0.000107	7.16	5003.28	9221.65	0.29
D100-00-00_0008	66074	0.2PCT_500yr	32416.00	17.22	51.54		52.19	0.000084	6.81	6497.83	13722.57	0.26
D100-00-00_0008	65662	10PCT_10yr	25114.00	17.02	44.40		45.53	0.000204	8.52	3010.22	926.31	0.38
D100-00-00_0008	65662	2PCT_50yr	27557.00	17.02	46.81		47.77	0.000160	7.92	3867.97	2974.79	0.34
D100-00-00_0008	65662	1PCT_100yr	29013.00	17.02	49.16		49.90	0.000110	7.07	5039.82	9675.95	0.29
D100-00-00_0008	65662	0.2PCT_500yr	32416.00	17.02	51.52		52.15	0.000084	6.68	6696.20	14438.86	0.26
D100-00-00_0008	65449	10PCT_10yr	25114.00	17.02	44.30	34.40	45.47	0.000203	8.67	2895.20	751.31	0.38
D100-00-00_0008	65449	2PCT_50yr	27557.00	17.02	46.65	35.16	47.71	0.000166	8.25	3502.60	3054.92	0.35
D100-00-00_0008	65449	1PCT_100yr	29013.00	17.02	49.03	35.59	49.85	0.000119	7.40	4745.39	9030.77	0.30
D100-00-00_0008	65449	0.2PCT_500yr	32416.00	17.02	51.41	36.57	52.11	0.000090	6.99	6295.08	14292.67	0.27
D100-00-00_0008	65406		Bridge									

HEC-RAS Plan: RevEx River: D100-00-00 Reach: D100-00-00_0008 (Continued)

Reach	River Sta	Profile	Q Total	Min Ch El	W.S. Elev	Crit W.S.	E.G. Elev	E.G. Slope	Vel Chnl	Flow Area	Top Width	Froude # Chl
			(cfs)	(ft)	(ft)	(ft)	(ft)	(ft/ft)	(ft/s)	(sq ft)	(ft)	
D100-00-00_0008	65371	10PCT_10yr	25114.00	17.02	43.78		45.03	0.000222	8.96	2802.83	322.30	0.40
D100-00-00_0008	65371	2PCT_50yr	27557.00	17.02	46.17		47.29	0.000180	8.51	3274.75	2401.33	0.36
D100-00-00_0008	65371	1PCT_100yr	29013.00	17.02	48.40		49.32	0.000149	7.76	4236.99	7437.00	0.33
D100-00-00_0008	65371	0.2PCT_500yr	32416.00	17.02	51.21		51.94	0.000101	7.07	5999.76	14017.96	0.28
D100-00-00_0008	65279	10PCT_10yr	25114.00	17.02	43.76		45.01	0.000223	8.97	2799.10	336.12	0.40
D100-00-00_0008	65279	2PCT_50yr	27557.00	17.02	46.16		47.28	0.000179	8.50	3424.44	2524.92	0.36
D100-00-00_0008	65279	1PCT_100yr	29013.00	17.02	48.38		49.30	0.000137	7.77	4544.19	7468.61	0.32
D100-00-00_0008	65279	0.2PCT_500yr	32416.00	17.02	51.20		51.93	0.000095	7.11	6549.61	13609.42	0.27
D100-00-00_0008	64115	10PCT_10yr	27138.00	15.85	43.52		44.75	0.000215	8.90	3062.40	250.72	0.39
D100-00-00_0008	64115	2PCT_50yr	29401.00	15.85	46.01		47.05	0.000161	8.23	3872.81	1918.32	0.34
D100-00-00_0008	64115	1PCT_100yr	30812.00	15.85	48.31		49.13	0.000111	7.41	5145.54	8144.86	0.29
D100-00-00_0008	64115	0.2PCT_500yr	35009.00	15.85	51.12		51.81	0.000083	6.98	6979.97	13681.21	0.26
D100-00-00_0008	63605	10PCT_10yr	27138.00	15.96	43.35		44.63	0.000235	9.06	3044.26	535.66	0.41
D100-00-00_0008	63605	2PCT_50yr	29401.00	15.96	45.95		46.96	0.000160	8.18	4329.86	2020.54	0.34
D100-00-00_0008	63605	1PCT_100yr	30812.00	15.96	48.30		49.05	0.000105	7.20	6199.44	6915.33	0.28
D100-00-00_0008	63605	0.2PCT_500yr	35009.00	15.96	51.13		51.75	0.000076	6.71	8460.37	13821.71	0.25
D100-00-00_0008	63311	10PCT_10yr	27138.00	17.78	43.58		44.45	0.000150	7.54	3891.82	636.31	0.33
D100-00-00_0008	63311	2PCT_50yr	29401.00	17.78	46.14		46.83	0.000105	6.80	6492.19	1555.46	0.28
D100-00-00_0008	63311	1PCT_100yr	30812.00	17.78	48.47		48.95	0.000067	5.87	16064.70	7526.48	0.23
D100-00-00_0008	63311	0.2PCT_500yr	35009.00	17.78	51.37		51.62	0.000036	4.72	49159.06	13822.29	0.17
D100-00-00_0008	62990	10PCT_10yr	27138.00	17.66	43.57		44.39	0.000135	7.33	4030.74	543.69	0.31
D100-00-00_0008	62990	2PCT_50yr	29401.00	17.66	46.12		46.79	0.000095	6.68	6034.48	1273.99	0.27
D100-00-00_0008	62990	1PCT_100yr	30812.00	17.66	48.43		48.92	0.000064	5.91	12963.27	5662.66	0.23
D100-00-00_0008	62990	0.2PCT_500yr	35009.00	17.66	51.32		51.61	0.000038	4.94	41717.56	13634.51	0.18
D100-00-00_0008	62342	10PCT_10yr	27138.00	15.18	43.14		44.26	0.000206	8.49	3332.95	598.25	0.38
D100-00-00_0008	62342	2PCT_50yr	29401.00	15.18	45.86		46.70	0.000137	7.49	4813.31	904.50	0.32
D100-00-00_0008	62342	1PCT_100yr	30812.00	15.18	48.24		48.86	0.000089	6.58	6285.00	4499.40	0.26
D100-00-00_0008	62342	0.2PCT_500yr	35009.00	15.18	51.04		51.56	0.000066	6.18	8226.48	12799.74	0.23
D100-00-00_0008	62151	10PCT_10yr	27138.00	15.18	43.10	33.09	44.22	0.000196	8.49	3266.22	261.95	0.37
D100-00-00_0008	62151	2PCT_50yr	29401.00	15.18	45.72	33.75	46.65	0.000139	7.77	4177.58	710.44	0.32
D100-00-00_0008	62151	1PCT_100yr	30812.00	15.18	48.07	34.15	48.81	0.000096	7.02	5455.60	5364.70	0.27
D100-00-00_0008	62151	0.2PCT_500yr	35009.00	15.18	50.89	35.29	51.51	0.000072	6.63	7281.37	11644.16	0.24
D100-00-00_0008	62073		Bridge									
D100-00-00_0008	62007	10PCT_10yr	27138.00	15.18	42.10		43.40	0.000237	9.17	2969.56	202.98	0.41
D100-00-00_0008	62007	2PCT_50yr	29401.00	15.18	44.26		45.41	0.000184	8.63	3768.74	817.08	0.37
D100-00-00_0008	62007	1PCT_100yr	30812.00	15.18	47.12		47.90	0.000110	7.31	6119.45	3087.49	0.29
D100-00-00_0008	62007	0.2PCT_500yr	35009.00	15.18	50.70		51.27	0.000069	6.46	9140.87	11381.19	0.24
D100-00-00_0008	61830	10PCT_10yr	27138.00	15.18	42.06		43.35	0.000254	9.12	2998.46	258.48	0.42
D100-00-00_0008	61830	2PCT_50yr	29401.00	15.18	44.24		45.36	0.000190	8.49	3701.00	791.13	0.37
D100-00-00_0008	61830	1PCT_100yr	30812.00	15.18	47.09		47.88	0.000114	7.31	5511.47	4247.40	0.29
D100-00-00_0008	61830	0.2PCT_500yr	35009.00	15.18	50.68		51.25	0.000070	6.45	8366.72	11401.34	0.24
D100-00-00_0008	61637	10PCT_10yr	28200.00	14.70	41.98		43.30	0.000244	9.24	3051.55	198.63	0.42
D100-00-00_0008	61637	2PCT_50yr	30333.00	14.70	44.16		45.31	0.000211	8.61	3610.90	359.03	0.39
D100-00-00_0008	61637	1PCT_100yr	31831.00	14.70	47.05		47.86	0.000126	7.34	5383.31	4410.13	0.31
D100-00-00_0008	61637	0.2PCT_500yr	36226.00	14.70	50.65		51.24	0.000076	6.45	8250.00	11373.15	0.25
D100-00-00_0008	61320	10PCT_10yr	28200.00	14.70	41.87	32.97	43.22	0.000239	9.31	3058.70	260.42	0.41
D100-00-00_0008	61320	2PCT_50yr	30333.00	14.70	44.08	33.60	45.24	0.000183	8.70	3730.49	354.38	0.37
D100-00-00_0008	61320	1PCT_100yr	31831.00	14.70	46.94	34.01	47.80	0.000115	7.59	5037.16	4166.47	0.30
D100-00-00_0008	61320	0.2PCT_500yr	36226.00	14.70	50.51	35.16	51.18	0.000077	6.91	7130.63	12087.91	0.25
D100-00-00_0008	61288		Bridge									
D100-00-00_0008	61265	10PCT_10yr	28200.00	14.70	41.45		42.88	0.000260	9.57	2958.51	221.15	0.43
D100-00-00_0008	61265	2PCT_50yr	30333.00	14.70	43.71		44.93	0.000195	8.91	3599.03	371.83	0.38
D100-00-00_0008	61265	1PCT_100yr	31831.00	14.70	46.55		47.47	0.000124	7.79	4877.47	3453.75	0.31
D100-00-00_0008	61265	0.2PCT_500yr	36226.00	14.70	50.14		50.85	0.000082	7.06	7140.41	11450.92	0.26
D100-00-00_0008	60903	10PCT_10yr	28200.00	14.70	41.33		42.77	0.000266	9.65	2931.08	215.04	0.43
D100-00-00_0008	60903	2PCT_50yr	30333.00	14.70	43.62		44.86	0.000198	8.95	3602.77	417.89	0.38
D100-00-00_0008	60903	1PCT_100yr	31831.00	14.70	46.52		47.41	0.000122	7.72	5158.96	3298.61	0.31
D100-00-00_0008	60903	0.2PCT_500yr	36226.00	14.70	50.14		50.80	0.000078	6.89	7330.04	12756.44	0.25
D100-00-00_0008	60444	10PCT_10yr	28200.00	13.07	41.32		42.61	0.000246	9.11	3095.61	207.97	0.42
D100-00-00_0008	60444	2PCT_50yr	30333.00	13.07	43.63		44.73	0.000190	8.40	3711.57	670.06	0.37
D100-00-00_0008	60444	1PCT_100yr	31831.00	13.07	46.54		47.32	0.000111	7.20	5649.03	3818.44	0.29
D100-00-00_0008	60444	0.2PCT_500yr	36226.00	13.07	50.16		50.74	0.000070	6.41	8393.04	12622.82	0.24
D100-00-00_0008	60180	10PCT_10yr	28200.00	13.07	41.28	32.19	42.52	0.000234	8.94	3155.92	210.31	0.41
D100-00-00_0008	60180	2PCT_50yr	30333.00	13.07	43.60	32.80	44.66	0.000187	8.27	3666.28	296.53	0.37

HEC-RAS Plan: RevEx River: D100-00-00 Reach: D100-00-00_0008 (Continued)

Reach	River Sta	Profile	Q Total	Min Ch El	W.S. Elev	Crit W.S.	E.G. Elev	E.G. Slope	Vel Chnl	Flow Area	Top Width	Froude # Chl
			(cfs)	(ft)	(ft)	(ft)	(ft)	(ft/ft)	(ft/s)	(sq ft)	(ft)	
D100-00-00_0008	60180	1PCT_100yr	31831.00	13.07	46.50	33.23	47.29	0.000121	7.16	5027.00	3460.80	0.30
D100-00-00_0008	60180	0.2PCT_500yr	36226.00	13.07	50.16	34.37	50.71	0.000072	6.25	8036.46	13096.94	0.24
D100-00-00_0008	60133		Bridge									
D100-00-00_0008	60087	10PCT_10yr	28200.00	13.07	40.96		42.30	0.000259	9.29	3036.89	206.20	0.43
D100-00-00_0008	60087	2PCT_50yr	30333.00	13.07	43.08		44.25	0.000215	8.67	3497.55	229.07	0.39
D100-00-00_0008	60087	1PCT_100yr	31831.00	13.07	45.65		46.56	0.000147	7.69	4456.17	1561.01	0.33
D100-00-00_0008	60087	0.2PCT_500yr	36226.00	13.07	50.02		50.60	0.000075	6.41	7965.95	13148.31	0.24
D100-00-00_0008	59882	10PCT_10yr	28200.00	13.07	40.63		42.18	0.000282	9.98	2824.95	180.70	0.45
D100-00-00_0008	59882	2PCT_50yr	30333.00	13.07	42.78		44.14	0.000244	9.37	3236.58	205.35	0.42
D100-00-00_0008	59882	1PCT_100yr	31831.00	13.07	45.41		46.48	0.000175	8.31	4446.54	1906.52	0.36
D100-00-00_0008	59882	0.2PCT_500yr	36226.00	13.07	49.72		50.52	0.000100	7.30	7561.26	11814.38	0.28
D100-00-00_0008	59575	10PCT_10yr	28200.00	13.07	40.55	32.19	42.09	0.000283	9.97	2829.63	182.48	0.45
D100-00-00_0008	59575	2PCT_50yr	30333.00	13.07	42.71	32.83	44.07	0.000232	9.36	3240.01	198.28	0.41
D100-00-00_0008	59575	1PCT_100yr	31831.00	13.07	45.34	33.29	46.42	0.000173	8.37	3964.75	1443.19	0.36
D100-00-00_0008	59575	0.2PCT_500yr	36226.00	13.07	49.62	34.49	50.47	0.000103	7.49	6582.88	12586.93	0.29
D100-00-00_0008	59546		Bridge									
D100-00-00_0008	59517	10PCT_10yr	28200.00	13.07	40.21		41.82	0.000303	10.17	2772.32	183.07	0.46
D100-00-00_0008	59517	2PCT_50yr	30333.00	13.07	42.45		43.85	0.000247	9.47	3201.78	202.29	0.42
D100-00-00_0008	59517	1PCT_100yr	31831.00	13.07	44.85		46.00	0.000175	8.61	3773.85	799.95	0.36
D100-00-00_0008	59517	0.2PCT_500yr	36226.00	13.07	48.60		49.60	0.000117	8.02	5608.89	11230.28	0.30
D100-00-00_0008	59253	10PCT_10yr	28200.00	13.07	40.05		41.72	0.000311	10.36	2722.34	177.56	0.47
D100-00-00_0008	59253	2PCT_50yr	30333.00	13.07	42.32		43.77	0.000246	9.65	3144.40	195.57	0.42
D100-00-00_0008	59253	1PCT_100yr	31831.00	13.07	44.73		45.94	0.000173	8.82	3756.82	1201.39	0.36
D100-00-00_0008	59253	0.2PCT_500yr	36226.00	13.07	48.53		49.56	0.000117	8.19	6268.71	11257.32	0.30
D100-00-00_0008	58740	10PCT_10yr	28200.00	13.07	39.88		41.56	0.000317	10.41	2709.36	178.45	0.47
D100-00-00_0008	58740	2PCT_50yr	30333.00	13.07	42.19		43.64	0.000247	9.67	3202.57	283.15	0.42
D100-00-00_0008	58740	1PCT_100yr	31831.00	13.07	44.66		45.84	0.000178	8.76	4124.52	726.48	0.36
D100-00-00_0008	58740	0.2PCT_500yr	36226.00	13.07	48.52		49.47	0.000117	7.95	7821.74	12193.14	0.30
D100-00-00_0008	58411	10PCT_10yr	28200.00	12.74	39.85		41.42	0.000296	10.05	2805.34	185.92	0.46
D100-00-00_0008	58411	2PCT_50yr	30333.00	12.74	42.18		43.54	0.000220	9.34	3385.69	324.36	0.40
D100-00-00_0008	58411	1PCT_100yr	31831.00	12.74	44.65		45.77	0.000152	8.51	4681.32	1011.69	0.34
D100-00-00_0008	58411	0.2PCT_500yr	36226.00	12.74	48.52		49.42	0.000100	7.77	9223.91	12128.59	0.28
D100-00-00_0008	58219	10PCT_10yr	28200.00	12.74	39.62	31.95	41.33	0.000319	10.47	2694.46	176.42	0.47
D100-00-00_0008	58219	2PCT_50yr	30333.00	12.74	42.00	32.59	43.46	0.000244	9.69	3157.64	278.26	0.42
D100-00-00_0008	58219	1PCT_100yr	31831.00	12.74	44.52	33.02	45.71	0.000173	8.78	4175.53	798.01	0.36
D100-00-00_0008	58219	0.2PCT_500yr	36226.00	12.74	48.41	34.22	49.38	0.000112	8.03	8196.69	12478.23	0.30
D100-00-00_0008	58182		Bridge									
D100-00-00_0008	58107	10PCT_10yr	28200.00	12.74	39.17		40.98	0.000346	10.79	2614.61	174.02	0.49
D100-00-00_0008	58107	2PCT_50yr	30333.00	12.74	41.67		43.19	0.000259	9.89	3068.70	194.91	0.43
D100-00-00_0008	58107	1PCT_100yr	31831.00	12.74	43.82		45.12	0.000195	9.15	3696.62	376.69	0.38
D100-00-00_0008	58107	0.2PCT_500yr	36226.00	12.74	47.42		48.53	0.000137	8.52	6542.64	9414.30	0.33
D100-00-00_0008	57958	10PCT_10yr	28200.00	12.74	39.07		40.91	0.000359	10.89	2589.82	174.93	0.50
D100-00-00_0008	57958	2PCT_50yr	30333.00	12.74	41.63		43.15	0.000278	9.91	3061.57	197.22	0.44
D100-00-00_0008	57958	1PCT_100yr	31831.00	12.74	43.80		45.07	0.000215	9.06	3598.59	357.82	0.39
D100-00-00_0008	57958	0.2PCT_500yr	36226.00	12.74	47.43		48.48	0.000153	8.26	6034.01	10543.09	0.34
D100-00-00_0008	57245	10PCT_10yr	28200.00	11.89	39.02		40.61	0.000291	10.10	2793.27	180.55	0.45
D100-00-00_0008	57245	2PCT_50yr	30333.00	11.89	41.59		42.92	0.000218	9.27	3273.65	193.95	0.40
D100-00-00_0008	57245	1PCT_100yr	31831.00	11.89	43.75		44.90	0.000172	8.59	3754.73	407.01	0.36
D100-00-00_0008	57245	0.2PCT_500yr	36226.00	11.89	47.36		48.37	0.000123	8.06	5351.93	8046.13	0.31
D100-00-00_0008	56478	10PCT_10yr	28200.00	10.79	38.98		40.33	0.000251	9.32	3025.39	198.71	0.42
D100-00-00_0008	56478	2PCT_50yr	30333.00	10.79	41.58		42.70	0.000193	8.50	3609.16	320.85	0.37
D100-00-00_0008	56478	1PCT_100yr	31831.00	10.79	43.78		44.72	0.000141	7.80	4571.84	970.54	0.33
D100-00-00_0008	56478	0.2PCT_500yr	36226.00	10.79	47.43		48.22	0.000094	7.22	7571.13	9510.39	0.27
D100-00-00_0008	56318	10PCT_10yr	28200.00	10.79	38.75	30.10	40.24	0.000269	9.81	2873.36	182.51	0.44
D100-00-00_0008	56318	2PCT_50yr	30333.00	10.79	41.38	30.74	42.63	0.000209	8.98	3378.33	203.80	0.39
D100-00-00_0008	56318	1PCT_100yr	31831.00	10.79	43.61	31.18	44.66	0.000174	8.23	4136.22	930.40	0.36
D100-00-00_0008	56318	0.2PCT_500yr	36226.00	10.79	47.38	32.37	48.20	0.000112	7.36	7924.67	9105.39	0.29
D100-00-00_0008	56267		Bridge									
D100-00-00_0008	56211	10PCT_10yr	28200.00	10.79	38.43		39.93	0.000286	9.84	2864.82	190.60	0.45
D100-00-00_0008	56211	2PCT_50yr	30333.00	10.79	41.15		42.38	0.000201	8.91	3460.08	239.36	0.38
D100-00-00_0008	56211	1PCT_100yr	31831.00	10.79	43.27		44.34	0.000154	8.28	4048.83	520.95	0.34
D100-00-00_0008	56211	0.2PCT_500yr	36226.00	10.79	46.65		47.59	0.000110	7.84	6760.41	8211.58	0.30

HEC-RAS Plan: RevEx River: D100-00-00 Reach: D100-00-00_0008 (Continued)

Reach	River Sta	Profile	Q Total	Min Ch El	W.S. Elev	Crit W.S.	E.G. Elev	E.G. Slope	Vel Chnl	Flow Area	Top Width	Froude # Chl
			(cfs)	(ft)	(ft)	(ft)	(ft)	(ft/ft)	(ft/s)	(sq ft)	(ft)	
D100-00-00_0008	56011	10PCT_10yr	28200.00	10.79	38.39		39.85	0.000284	9.72	2902.24	196.48	0.45
D100-00-00_0008	56011	2PCT_50yr	30333.00	10.79	41.13		42.32	0.000208	8.73	3475.89	242.40	0.39
D100-00-00_0008	56011	1PCT_100yr	31831.00	10.79	43.28		44.28	0.000152	8.03	4488.34	1048.18	0.34
D100-00-00_0008	56011	0.2PCT_500yr	36226.00	10.79	46.68		47.52	0.000104	7.45	8000.08	8495.06	0.29
D100-00-00_0008	55360	10PCT_10yr	28200.00	10.79	38.15		39.66	0.000295	9.87	2855.80	194.45	0.45
D100-00-00_0008	55360	2PCT_50yr	30333.00	10.79	40.97		42.18	0.000215	8.83	3437.76	222.67	0.39
D100-00-00_0008	55360	1PCT_100yr	31831.00	10.79	43.17		44.17	0.000160	8.06	4570.87	1934.94	0.34
D100-00-00_0008	55360	0.2PCT_500yr	36226.00	10.79	46.61		47.45	0.000107	7.44	7545.83	7433.38	0.29
D100-00-00_0008	54524	10PCT_10yr	28200.00	9.46	37.77		39.39	0.000312	10.24	2754.52	244.21	0.47
D100-00-00_0008	54524	2PCT_50yr	30333.00	9.46	40.69		41.99	0.000219	9.14	3317.50	890.44	0.40
D100-00-00_0008	54524	1PCT_100yr	31831.00	9.46	42.93		44.03	0.000169	8.41	3879.20	1657.59	0.35
D100-00-00_0008	54524	0.2PCT_500yr	36226.00	9.46	46.38		47.34	0.000119	7.91	5809.84	7525.07	0.30
D100-00-00_0008	54310	10PCT_10yr	28200.00	9.46	37.67	29.86	39.32	0.000317	10.30	2736.60	183.17	0.47
D100-00-00_0008	54310	2PCT_50yr	30333.00	9.46	40.63	30.51	41.94	0.000221	9.18	3305.54	685.47	0.40
D100-00-00_0008	54310	1PCT_100yr	31831.00	9.46	42.89	30.94	43.99	0.000170	8.43	3887.41	1645.42	0.35
D100-00-00_0008	54310	0.2PCT_500yr	36226.00	9.46	46.36	32.16	47.31	0.000119	7.90	6108.50	7058.18	0.30
D100-00-00_0008	54244		Bridge									
D100-00-00_0008	54178	10PCT_10yr	28200.00	9.46	37.09		38.88	0.000352	10.71	2632.29	179.70	0.49
D100-00-00_0008	54178	2PCT_50yr	30333.00	9.46	40.00		41.41	0.000245	9.54	3180.29	459.68	0.42
D100-00-00_0008	54178	1PCT_100yr	31831.00	9.46	41.92		43.15	0.000198	8.92	3587.64	1312.35	0.38
D100-00-00_0008	54178	0.2PCT_500yr	36226.00	9.46	44.77		45.91	0.000157	8.62	4968.64	4340.73	0.35
D100-00-00_0008	53943	10PCT_10yr	28200.00	9.46	36.97		38.79	0.000360	10.80	2655.44	250.79	0.50
D100-00-00_0008	53943	2PCT_50yr	30333.00	9.46	39.95		41.35	0.000245	9.53	3485.31	523.84	0.42
D100-00-00_0008	53943	1PCT_100yr	31831.00	9.46	41.89		43.09	0.000195	8.83	4492.99	1651.70	0.38
D100-00-00_0008	53943	0.2PCT_500yr	36226.00	9.46	44.78		45.83	0.000148	8.37	6800.58	5655.91	0.34
D100-00-00_0008	53426	10PCT_10yr	28200.00	9.46	36.71		38.59	0.000378	11.00	2563.27	177.36	0.51
D100-00-00_0008	53426	2PCT_50yr	30333.00	9.46	39.76		41.22	0.000256	9.68	3132.97	435.36	0.43
D100-00-00_0008	53426	1PCT_100yr	31831.00	9.46	41.72		42.98	0.000204	9.00	3931.20	1709.60	0.38
D100-00-00_0008	53426	0.2PCT_500yr	36226.00	9.46	44.67		45.75	0.000153	8.47	7009.60	4713.31	0.34
D100-00-00_0008	52853	10PCT_10yr	28200.00	8.48	36.68		38.31	0.000323	10.24	2754.75	189.00	0.47
D100-00-00_0008	52853	2PCT_50yr	30333.00	8.48	39.76		41.02	0.000216	9.02	3362.33	301.40	0.39
D100-00-00_0008	52853	1PCT_100yr	31831.00	8.48	41.73		42.83	0.000167	8.40	4336.82	1554.96	0.35
D100-00-00_0008	52853	0.2PCT_500yr	36226.00	8.48	44.68		45.64	0.000123	7.97	7836.59	4146.31	0.31
D100-00-00_0008	52659	10PCT_10yr	28200.00	8.48	36.59	29.11	38.24	0.000328	10.30	2738.24	188.48	0.48
D100-00-00_0008	52659	2PCT_50yr	30333.00	8.48	39.70	29.75	40.98	0.000216	9.06	3353.92	252.48	0.39
D100-00-00_0008	52659	1PCT_100yr	31831.00	8.48	41.70	30.19	42.79	0.000169	8.40	4761.15	1465.03	0.35
D100-00-00_0008	52659	0.2PCT_500yr	36226.00	8.48	44.67	31.42	45.60	0.000123	7.87	8380.97	4236.74	0.31
D100-00-00_0008	52603		Bridge									
D100-00-00_0008	52555	10PCT_10yr	28200.00	8.48	36.31		38.03	0.000346	10.50	2685.38	186.83	0.49
D100-00-00_0008	52555	2PCT_50yr	30333.00	8.48	39.39		40.72	0.000229	9.23	3312.19	312.88	0.40
D100-00-00_0008	52555	1PCT_100yr	31831.00	8.48	41.12		42.29	0.000187	8.70	4305.71	1231.39	0.37
D100-00-00_0008	52555	0.2PCT_500yr	36226.00	8.48	43.88		44.90	0.000145	8.24	7437.55	3867.22	0.33
D100-00-00_0008	52372	10PCT_10yr	28200.00	8.48	36.22		37.96	0.000352	10.57	2668.50	186.24	0.49
D100-00-00_0008	52372	2PCT_50yr	30333.00	8.48	39.35		40.67	0.000233	9.25	3307.61	333.49	0.41
D100-00-00_0008	52372	1PCT_100yr	31831.00	8.48	41.09		42.25	0.000192	8.69	4282.89	1444.55	0.37
D100-00-00_0008	52372	0.2PCT_500yr	36226.00	8.48	43.85		44.88	0.000156	8.22	6778.93	4504.84	0.34
D100-00-00_0008	51466	10PCT_10yr	30041.00	7.65	35.86		37.64	0.000343	10.71	2804.52	188.26	0.49
D100-00-00_0008	51466	2PCT_50yr	33720.00	7.65	38.92		40.43	0.000255	9.88	3538.25	428.36	0.43
D100-00-00_0008	51466	1PCT_100yr	35633.00	7.65	40.72		42.05	0.000206	9.32	5077.39	1937.12	0.39
D100-00-00_0008	51466	0.2PCT_500yr	39606.00	7.65	43.69		44.74	0.000138	8.46	9307.89	4562.33	0.33
D100-00-00_0008	50814	10PCT_10yr	30041.00	4.91	36.05		37.30	0.000222	9.00	3480.27	343.48	0.40
D100-00-00_0008	50814	2PCT_50yr	33720.00	4.91	39.12		40.15	0.000184	8.21	5791.06	1236.29	0.36
D100-00-00_0008	50814	1PCT_100yr	35633.00	4.91	40.95		41.80	0.000142	7.56	8254.86	1612.44	0.32
D100-00-00_0008	50814	0.2PCT_500yr	39606.00	4.91	43.90		44.54	0.000094	6.77	13650.73	4989.76	0.27
D100-00-00_0008	50583	10PCT_10yr	30041.00	4.91	35.87	26.09	37.22	0.000236	9.33	3220.67	200.70	0.41
D100-00-00_0008	50583	2PCT_50yr	33720.00	4.91	38.89	27.18	40.06	0.000183	8.71	4498.68	1030.15	0.37
D100-00-00_0008	50583	1PCT_100yr	35633.00	4.91	40.69	27.71	41.71	0.000144	8.19	6703.53	1420.60	0.33
D100-00-00_0008	50583	0.2PCT_500yr	39606.00	4.91	43.67	28.76	44.48	0.000099	7.46	12104.12	3963.57	0.28
D100-00-00_0008	50574		Bridge									
D100-00-00_0008	50565	10PCT_10yr	30041.00	4.91	35.68		37.10	0.000255	9.56	3142.07	199.07	0.42
D100-00-00_0008	50565	2PCT_50yr	33720.00	4.91	38.74		39.96	0.000198	8.88	4337.39	911.90	0.38
D100-00-00_0008	50565	1PCT_100yr	35633.00	4.91	40.39		41.47	0.000175	8.39	6275.79	1342.03	0.36
D100-00-00_0008	50565	0.2PCT_500yr	39606.00	4.91	43.42		44.23	0.000114	7.48	11732.33	3416.13	0.30

HEC-RAS Plan: RevEx River: D100-00-00 Reach: D100-00-00_0008 (Continued)

Reach	River Sta	Profile	Q Total	Min Ch El	W.S. Elev	Crit W.S.	E.G. Elev	E.G. Slope	Vel Chnl	Flow Area	Top Width	Froude # Chl
			(cfs)	(ft)	(ft)	(ft)	(ft)	(ft/ft)	(ft/s)	(sq ft)	(ft)	
D100-00-00_0008	50345	10PCT_10yr	30041.00	9.03	35.51		37.01	0.000277	9.84	3052.36	201.02	0.45
D100-00-00_0008	50345	2PCT_50yr	33720.00	9.03	38.62		39.90	0.000201	9.08	4069.22	815.06	0.39
D100-00-00_0008	50345	1PCT_100yr	35633.00	9.03	40.26		41.41	0.000162	8.66	5920.65	1650.11	0.35
D100-00-00_0008	50345	0.2PCT_500yr	39606.00	9.03	43.30		44.18	0.000108	7.81	12276.58	3475.80	0.29
D100-00-00_0008	49222	10PCT_10yr	30041.00	4.91	35.31		36.68	0.000252	9.39	3198.36	207.89	0.42
D100-00-00_0008	49222	2PCT_50yr	33720.00	4.91	38.49		39.65	0.000184	8.65	4072.49	551.11	0.37
D100-00-00_0008	49222	1PCT_100yr	35633.00	4.91	40.15		41.20	0.000153	8.27	5503.72	1215.32	0.34
D100-00-00_0008	49222	0.2PCT_500yr	39606.00	4.91	43.21		44.05	0.000106	7.56	10797.38	3980.89	0.29
D100-00-00_0008	48436	10PCT_10yr	30041.00	3.48	35.30		36.43	0.000193	8.52	3533.92	236.31	0.37
D100-00-00_0008	48436	2PCT_50yr	33720.00	3.48	38.49		39.46	0.000156	7.88	4664.23	687.03	0.34
D100-00-00_0008	48436	1PCT_100yr	35633.00	3.48	40.17		41.03	0.000132	7.49	6275.78	2029.84	0.31
D100-00-00_0008	48436	0.2PCT_500yr	39606.00	3.48	43.25		43.93	0.000091	6.76	11340.37	5165.34	0.27
D100-00-00_0008	48182	10PCT_10yr	30041.00	3.48	35.14	24.55	36.35	0.000206	8.85	3392.90	205.90	0.38
D100-00-00_0008	48182	2PCT_50yr	33720.00	3.48	38.35	25.59	39.39	0.000155	8.20	4725.69	727.08	0.34
D100-00-00_0008	48182	1PCT_100yr	35633.00	3.48	40.05	26.10	40.98	0.000126	7.81	6746.58	1802.65	0.31
D100-00-00_0008	48182	0.2PCT_500yr	39606.00	3.48	43.14	27.12	43.88	0.000087	7.15	11415.61	4627.81	0.26
D100-00-00_0008	48156		Bridge									
D100-00-00_0008	48130	10PCT_10yr	30041.00	3.48	34.94		36.17	0.000214	8.91	3370.65	208.29	0.39
D100-00-00_0008	48130	2PCT_50yr	33720.00	3.48	38.20		39.24	0.000167	8.20	4614.70	929.29	0.35
D100-00-00_0008	48130	1PCT_100yr	35633.00	3.48	39.94		40.85	0.000137	7.73	6746.17	1695.03	0.32
D100-00-00_0008	48130	0.2PCT_500yr	39606.00	3.48	43.00		43.72	0.000092	7.03	11113.70	4366.66	0.27
D100-00-00_0008	47910	10PCT_10yr	30041.00	3.48	34.85		36.12	0.000214	9.03	3327.63	201.78	0.39
D100-00-00_0008	47910	2PCT_50yr	33720.00	3.48	38.11		39.19	0.000169	8.36	4113.02	598.41	0.35
D100-00-00_0008	47910	1PCT_100yr	35633.00	3.48	39.80		40.80	0.000137	8.01	5324.66	1540.82	0.32
D100-00-00_0008	47910	0.2PCT_500yr	39606.00	3.48	42.82		43.66	0.000099	7.49	8599.78	3751.29	0.28
D100-00-00_0008	47648	10PCT_10yr	30041.00	3.48	34.66	24.53	36.03	0.000214	9.39	3200.93	180.54	0.39
D100-00-00_0008	47648	2PCT_50yr	33720.00	3.48	37.89	25.50	39.11	0.000169	8.85	3843.85	321.71	0.35
D100-00-00_0008	47648	1PCT_100yr	35633.00	3.48	39.58	26.00	40.71	0.000160	8.55	4859.61	1951.09	0.34
D100-00-00_0008	47648	0.2PCT_500yr	39606.00	3.48	42.65	26.95	43.60	0.000116	7.94	7905.58	3918.49	0.30
D100-00-00_0008	47623		Bridge									
D100-00-00_0008	47599	10PCT_10yr	30041.00	3.48	34.37		35.78	0.000224	9.54	3148.23	179.23	0.40
D100-00-00_0008	47599	2PCT_50yr	33720.00	3.48	37.57		38.83	0.000176	9.00	3753.02	233.46	0.36
D100-00-00_0008	47599	1PCT_100yr	35633.00	3.48	39.10		40.30	0.000155	8.80	4426.14	1489.17	0.34
D100-00-00_0008	47599	0.2PCT_500yr	39606.00	3.48	41.93		43.01	0.000120	8.41	7158.48	3088.90	0.31
D100-00-00_0008	47458	10PCT_10yr	30041.00	3.48	34.41		35.68	0.000223	9.05	3318.15	207.32	0.40
D100-00-00_0008	47458	2PCT_50yr	33720.00	3.48	37.63		38.71	0.000181	8.33	4350.39	657.69	0.36
D100-00-00_0008	47458	1PCT_100yr	35633.00	3.48	39.19		40.17	0.000152	7.98	5517.70	1567.47	0.34
D100-00-00_0008	47458	0.2PCT_500yr	39606.00	3.48	42.04		42.87	0.000108	7.44	8329.51	3249.89	0.29
D100-00-00_0008	47268	10PCT_10yr	30892.00	3.26	34.34		35.64	0.000233	9.11	3389.34	262.52	0.41
D100-00-00_0008	47268	2PCT_50yr	34791.00	3.26	37.58		38.67	0.000174	8.39	4456.68	1013.74	0.36
D100-00-00_0008	47268	1PCT_100yr	36807.00	3.26	39.13		40.13	0.000144	8.09	5548.40	1787.10	0.33
D100-00-00_0008	47268	0.2PCT_500yr	41557.00	3.26	41.92		42.84	0.000111	7.78	7821.04	4118.08	0.30
D100-00-00_0008	46808	10PCT_10yr	30892.00	2.00	34.46		35.45	0.000173	7.97	3876.38	369.39	0.35
D100-00-00_0008	46808	2PCT_50yr	34791.00	2.00	37.69		38.53	0.000138	7.33	4823.21	1286.08	0.32
D100-00-00_0008	46808	1PCT_100yr	36807.00	2.00	39.23		40.00	0.000118	7.08	5476.67	1535.17	0.30
D100-00-00_0008	46808	0.2PCT_500yr	41557.00	2.00	42.01		42.74	0.000093	6.83	6857.36	3717.72	0.27
D100-00-00_0008	46603	10PCT_10yr	30892.00	2.00	34.45	23.11	35.40	0.000159	7.83	3963.60	665.65	0.34
D100-00-00_0008	46603	2PCT_50yr	34791.00	2.00	37.66	24.15	38.50	0.000111	7.36	4914.21	1358.59	0.29
D100-00-00_0008	46603	1PCT_100yr	36807.00	2.00	39.17	24.66	39.97	0.000097	7.22	5450.57	1651.51	0.28
D100-00-00_0008	46603	0.2PCT_500yr	41557.00	2.00	41.90	25.79	42.69	0.000081	7.19	6478.06	3934.09	0.26
D100-00-00_0008	46575		Bridge									
D100-00-00_0008	46536	10PCT_10yr	30892.00	2.00	34.21		35.28	0.000156	8.30	3830.17	1228.36	0.34
D100-00-00_0008	46536	2PCT_50yr	34791.00	2.00	37.42		38.39	0.000114	7.91	4947.96	1521.35	0.30
D100-00-00_0008	46536	1PCT_100yr	36807.00	2.00	38.93		39.87	0.000101	7.79	5482.96	1559.96	0.29
D100-00-00_0008	46536	0.2PCT_500yr	41557.00	2.00	41.66		42.59	0.000088	7.82	6446.24	4141.81	0.27
D100-00-00_0008	46472	10PCT_10yr	30892.00	2.00	34.23	23.09	35.24	0.000152	8.07	3939.40	4174.32	0.34
D100-00-00_0008	46472	2PCT_50yr	34791.00	2.00	37.45	24.10	38.35	0.000110	7.66	5036.05	4369.47	0.29
D100-00-00_0008	46472	1PCT_100yr	36807.00	2.00	38.96	24.60	39.83	0.000097	7.54	5557.60	4599.92	0.28
D100-00-00_0008	46472	0.2PCT_500yr	41557.00	2.00	41.68	25.75	42.55	0.000083	7.55	6496.92	5160.59	0.26
D100-00-00_0008	46328		Bridge									
D100-00-00_0008	46185	10PCT_10yr	30892.00	2.00	33.79		34.89	0.000183	8.40	3676.37	2181.11	0.36
D100-00-00_0008	46185	2PCT_50yr	34791.00	2.00	36.59		37.59	0.000155	8.02	4336.49	3243.19	0.34
D100-00-00_0008	46185	1PCT_100yr	36807.00	2.00	37.94		38.90	0.000147	7.86	4685.27	3459.43	0.33

HEC-RAS Plan: RevEx River: D100-00-00 Reach: D100-00-00_0008 (Continued)

Reach	River Sta	Profile	Q Total	Min Ch El	W.S. Elev	Crit W.S.	E.G. Elev	E.G. Slope	Vel Chnl	Flow Area	Top Width	Froude # Chl
			(cfs)	(ft)	(ft)	(ft)	(ft)	(ft/ft)	(ft/s)	(sq ft)	(ft)	
D100-00-00_0008	46185	0.2PCT_500yr	41557.00	2.00	40.35		41.29	0.000128	7.77	5362.61	4080.75	0.31
D100-00-00_0008	46126	10PCT_10yr	30892.00	2.00	33.77	23.07	34.88	0.000181	8.43	3663.13	409.47	0.36
D100-00-00_0008	46126	2PCT_50yr	34791.00	2.00	36.56	24.10	37.58	0.000150	8.10	4294.38	693.45	0.33
D100-00-00_0008	46126	1PCT_100yr	36807.00	2.00	37.90	24.60	38.88	0.000139	7.97	4616.62	979.84	0.32
D100-00-00_0008	46126	0.2PCT_500yr	41557.00	2.00	40.28	25.75	41.27	0.000127	7.96	5222.03	2050.85	0.31
D100-00-00_0008	46079		Bridge									
D100-00-00_0008	46039	10PCT_10yr	30892.00	2.00	33.60		34.73	0.000187	8.52	3624.92	246.90	0.37
D100-00-00_0008	46039	2PCT_50yr	34791.00	2.00	36.40		37.44	0.000153	8.17	4258.70	507.20	0.34
D100-00-00_0008	46039	1PCT_100yr	36807.00	2.00	37.75		38.76	0.000141	8.03	4581.60	1079.81	0.33
D100-00-00_0008	46039	0.2PCT_500yr	41557.00	2.00	40.15		41.14	0.000130	8.01	5186.23	2075.52	0.32
D100-00-00_0008	46008	10PCT_10yr	30892.00	2.00	33.59		34.72	0.000187	8.53	3622.95	217.61	0.37
D100-00-00_0008	46008	2PCT_50yr	34791.00	2.00	36.40		37.44	0.000153	8.17	4256.95	651.19	0.34
D100-00-00_0008	46008	1PCT_100yr	36807.00	2.00	37.75		38.75	0.000142	8.04	4579.91	953.02	0.33
D100-00-00_0008	46008	0.2PCT_500yr	41557.00	2.00	40.14		41.14	0.000130	8.02	5184.58	2159.57	0.32
D100-00-00_0008	44835	10PCT_10yr	30892.00	1.47	33.17		34.47	0.000214	9.13	3385.08	201.90	0.39
D100-00-00_0008	44835	2PCT_50yr	34791.00	1.47	36.05		37.23	0.000176	8.71	3993.49	313.96	0.36
D100-00-00_0008	44835	1PCT_100yr	36807.00	1.47	37.43		38.56	0.000157	8.55	4409.09	1306.47	0.34
D100-00-00_0008	44835	0.2PCT_500yr	41557.00	1.47	39.85		40.97	0.000133	8.52	5699.83	1987.80	0.32
D100-00-00_0008	44044	10PCT_10yr	30892.00	0.89	32.98		34.30	0.000213	9.22	3350.79	243.70	0.39
D100-00-00_0008	44044	2PCT_50yr	34791.00	0.89	35.88		37.09	0.000175	8.83	3941.09	746.98	0.36
D100-00-00_0008	44044	1PCT_100yr	36807.00	0.89	37.26		38.43	0.000167	8.67	4247.51	1019.70	0.35
D100-00-00_0008	44044	0.2PCT_500yr	41557.00	0.89	39.71		40.86	0.000150	8.62	4861.93	1908.70	0.34
D100-00-00_0008	43888	10PCT_10yr	30892.00	0.81	33.06		34.22	0.000193	8.64	3577.22	274.06	0.37
D100-00-00_0008	43888	2PCT_50yr	34791.00	0.81	35.96		37.02	0.000149	8.24	4236.31	1236.29	0.34
D100-00-00_0008	43888	1PCT_100yr	36807.00	0.81	37.34		38.36	0.000132	8.11	4586.01	1446.88	0.32
D100-00-00_0008	43888	0.2PCT_500yr	41557.00	0.81	39.77		40.80	0.000115	8.16	5344.84	2025.95	0.30
D100-00-00_0008	43729	10PCT_10yr	30892.00	0.81	33.02	22.17	34.18	0.000195	8.66	3567.23	565.50	0.38
D100-00-00_0008	43729	2PCT_50yr	34791.00	0.81	35.94	23.28	36.99	0.000153	8.22	4467.76	799.01	0.34
D100-00-00_0008	43729	1PCT_100yr	36807.00	0.81	37.33	23.82	38.34	0.000134	8.06	4944.48	1155.62	0.32
D100-00-00_0008	43729	0.2PCT_500yr	41557.00	0.81	39.77	25.04	40.77	0.000115	8.06	5885.99	1885.09	0.30
D100-00-00_0008	43706		Bridge									
D100-00-00_0008	43684	10PCT_10yr	30892.00	0.81	32.82		34.01	0.000202	8.76	3525.76	374.03	0.38
D100-00-00_0008	43684	2PCT_50yr	34791.00	0.81	35.37		36.49	0.000169	8.48	4241.49	754.19	0.35
D100-00-00_0008	43684	1PCT_100yr	36807.00	0.81	36.57		37.67	0.000151	8.39	4696.26	861.48	0.34
D100-00-00_0008	43684	0.2PCT_500yr	41557.00	0.81	38.90		39.99	0.000130	8.40	5625.81	1590.24	0.32
D100-00-00_0008	43489	10PCT_10yr	30892.00	0.81	32.77		33.97	0.000203	8.79	3515.61	215.00	0.38
D100-00-00_0008	43489	2PCT_50yr	34791.00	0.81	35.33		36.45	0.000174	8.50	4285.86	685.90	0.36
D100-00-00_0008	43489	1PCT_100yr	36807.00	0.81	36.55		37.63	0.000156	8.38	4797.69	835.04	0.34
D100-00-00_0008	43489	0.2PCT_500yr	41557.00	0.81	38.88		39.95	0.000132	8.35	5880.65	1672.28	0.32
D100-00-00_0008	42650	10PCT_10yr	32102.00	0.57	32.48		33.79	0.000214	9.15	3507.52	209.09	0.39
D100-00-00_0008	42650	2PCT_50yr	36320.00	0.57	35.05		36.29	0.000188	8.92	4069.88	228.94	0.37
D100-00-00_0008	42650	1PCT_100yr	38484.00	0.57	36.27		37.48	0.000175	8.84	4355.41	345.24	0.36
D100-00-00_0008	42650	0.2PCT_500yr	44397.00	0.57	38.54		39.81	0.000163	9.06	5136.95	1551.02	0.36
D100-00-00_0008	41240	10PCT_10yr	32102.00	0.49	32.25		33.47	0.000198	8.87	3618.89	414.39	0.38
D100-00-00_0008	41240	2PCT_50yr	36320.00	0.49	34.85		36.01	0.000172	8.65	4203.40	1332.41	0.36
D100-00-00_0008	41240	1PCT_100yr	38484.00	0.49	36.08		37.22	0.000162	8.56	4612.12	1845.44	0.35
D100-00-00_0008	41240	0.2PCT_500yr	44397.00	0.49	38.38		39.56	0.000148	8.74	5657.32	2647.95	0.34
D100-00-00_0008	40038	10PCT_10yr	32102.00	-1.58	32.11		33.21	0.000175	8.44	3852.62	373.69	0.36
D100-00-00_0008	40038	2PCT_50yr	36320.00	-1.58	34.75		35.78	0.000149	8.16	5215.43	1464.45	0.33
D100-00-00_0008	40038	1PCT_100yr	38484.00	-1.58	36.01		37.00	0.000132	8.06	5976.47	1504.81	0.32
D100-00-00_0008	40038	0.2PCT_500yr	44397.00	-1.58	38.33		39.36	0.000119	8.21	7420.74	2259.36	0.31
D100-00-00_0008	39300	10PCT_10yr	32102.00	-1.96	31.99		33.08	0.000175	8.38	3871.50	281.83	0.36
D100-00-00_0008	39300	2PCT_50yr	36320.00	-1.96	34.64		35.67	0.000149	8.13	4790.19	475.32	0.33
D100-00-00_0008	39300	1PCT_100yr	38484.00	-1.96	35.91		36.91	0.000133	8.03	5434.63	643.00	0.32
D100-00-00_0008	39300	0.2PCT_500yr	44397.00	-1.96	38.23		39.27	0.000120	8.22	6678.62	1238.45	0.31
D100-00-00_0008	38191	10PCT_10yr	32102.00	-2.59	31.96		32.84	0.000143	7.53	4268.30	280.59	0.32
D100-00-00_0008	38191	2PCT_50yr	36320.00	-2.59	34.64		35.47	0.000113	7.31	5178.11	365.05	0.29
D100-00-00_0008	38191	1PCT_100yr	38484.00	-2.59	35.91		36.72	0.000103	7.26	5679.69	510.49	0.28
D100-00-00_0008	38191	0.2PCT_500yr	44397.00	-2.59	38.24		39.10	0.000094	7.47	7003.32	1029.56	0.28
D100-00-00_0008	37914	10PCT_10yr	32102.00	-2.59	31.91	19.37	32.80	0.000147	7.56	4248.85	257.32	0.33
D100-00-00_0008	37914	2PCT_50yr	36320.00	-2.59	34.60	20.59	35.43	0.000127	7.30	4972.65	474.55	0.31
D100-00-00_0008	37914	1PCT_100yr	38484.00	-2.59	35.88	21.16	36.68	0.000120	7.20	5356.45	830.55	0.30
D100-00-00_0008	37914	0.2PCT_500yr	44397.00	-2.59	38.22	22.53	39.05	0.000107	7.31	6360.57	1764.55	0.29

HEC-RAS Plan: RevEx River: D100-00-00 Reach: D100-00-00_0008 (Continued)

Reach	River Sta	Profile	Q Total	Min Ch El	W.S. Elev	Crit W.S.	E.G. Elev	E.G. Slope	Vel Chnl	Flow Area	Top Width	Froude # Chl
			(cfs)	(ft)	(ft)	(ft)	(ft)	(ft/ft)	(ft/s)	(sq ft)	(ft)	
D100-00-00_0008	37867		Bridge									
D100-00-00_0008	37795	10PCT_10yr	32102.00	-2.59	31.64		32.55	0.000151	7.67	4184.48	251.87	0.33
D100-00-00_0008	37795	2PCT_50yr	36320.00	-2.59	34.39		35.24	0.000127	7.40	4910.05	274.61	0.31
D100-00-00_0008	37795	1PCT_100yr	38484.00	-2.59	35.67		36.50	0.000117	7.31	5270.21	405.60	0.30
D100-00-00_0008	37795	0.2PCT_500yr	44397.00	-2.59	37.86		38.73	0.000111	7.51	6256.24	1092.04	0.29
D100-00-00_0008	36304	10PCT_10yr	32912.00	-4.12	31.30		32.31	0.000147	8.04	4389.68	343.53	0.33
D100-00-00_0008	36304	2PCT_50yr	37400.00	-4.12	34.07		35.02	0.000121	7.87	5618.55	524.42	0.31
D100-00-00_0008	36304	1PCT_100yr	39577.00	-4.12	35.37		36.30	0.000110	7.79	6319.85	666.10	0.29
D100-00-00_0008	36304	0.2PCT_500yr	45556.00	-4.12	37.54		38.54	0.000105	8.10	7593.46	1362.69	0.29
D100-00-00_0008	35047	10PCT_10yr	32912.00	-4.76	31.08		32.11	0.000150	8.17	4239.54	644.92	0.33
D100-00-00_0008	35047	2PCT_50yr	37400.00	-4.76	33.88		34.86	0.000127	7.98	5616.83	1065.04	0.31
D100-00-00_0008	35047	1PCT_100yr	39577.00	-4.76	35.21		36.16	0.000116	7.88	6624.55	1650.15	0.30
D100-00-00_0008	35047	0.2PCT_500yr	45556.00	-4.76	37.41		38.40	0.000111	8.07	8474.89	2844.02	0.30
D100-00-00_0008	33975	10PCT_10yr	32912.00	-3.48	31.00		31.93	0.000132	7.79	5323.31	464.51	0.32
D100-00-00_0008	33975	2PCT_50yr	37400.00	-3.48	33.83		34.70	0.000114	7.59	6815.64	1130.82	0.30
D100-00-00_0008	33975	1PCT_100yr	39577.00	-3.48	35.17		36.01	0.000103	7.47	7722.59	1434.81	0.28
D100-00-00_0008	33975	0.2PCT_500yr	45556.00	-3.48	37.38		38.25	0.000096	7.69	9377.58	2990.49	0.28
D100-00-00_0008	33053	10PCT_10yr	32912.00	-6.53	30.99		31.78	0.000110	7.16	4860.95	392.61	0.29
D100-00-00_0008	33053	2PCT_50yr	37400.00	-6.53	33.81		34.58	0.000089	7.04	6397.78	953.04	0.27
D100-00-00_0008	33053	1PCT_100yr	39577.00	-6.53	35.15		35.90	0.000080	6.98	7306.33	1129.60	0.26
D100-00-00_0008	33053	0.2PCT_500yr	45556.00	-6.53	37.35		38.15	0.000077	7.25	8805.05	2807.84	0.25
D100-00-00_0008	32783	10PCT_10yr	32912.00	-6.53	31.02	15.21	31.69	0.000104	6.53	5045.92	371.20	0.28
D100-00-00_0008	32783	2PCT_50yr	37400.00	-6.53	33.87	16.69	34.48	0.000081	6.30	6965.54	1061.40	0.25
D100-00-00_0008	32783	1PCT_100yr	39577.00	-6.53	35.21	17.33	35.80	0.000072	6.20	7987.19	1233.76	0.24
D100-00-00_0008	32783	0.2PCT_500yr	45556.00	-6.53	37.42	18.88	38.04	0.000067	6.39	9676.12	3490.15	0.23
D100-00-00_0008	32718		Bridge									
D100-00-00_0008	32654	10PCT_10yr	32912.00	-6.53	30.31		31.26	0.000133	7.82	4446.03	293.32	0.31
D100-00-00_0008	32654	2PCT_50yr	37400.00	-6.53	32.77		33.72	0.000117	7.85	5404.63	632.07	0.30
D100-00-00_0008	32654	1PCT_100yr	39577.00	-6.53	34.03		34.97	0.000107	7.80	6420.06	996.98	0.29
D100-00-00_0008	32654	0.2PCT_500yr	45556.00	-6.53	36.53		37.48	0.000096	7.93	8675.75	2174.51	0.28
D100-00-00_0008	32444	10PCT_10yr	32912.00	-3.14	30.43		31.04	0.000414	6.27	5246.91	257.71	0.25
D100-00-00_0008	32444	2PCT_50yr	37400.00	-3.14	32.90		33.52	0.000396	6.33	5978.72	447.92	0.24
D100-00-00_0008	32444	1PCT_100yr	39577.00	-3.14	34.16		34.77	0.000375	6.30	6924.41	931.91	0.24
D100-00-00_0008	32444	0.2PCT_500yr	45556.00	-3.14	36.67		37.28	0.000331	6.36	9329.55	1881.36	0.23
D100-00-00_0008	31614	10PCT_10yr	32912.00	-3.14	30.08		30.69	0.000436	6.31	6062.23	628.90	0.25
D100-00-00_0008	31614	2PCT_50yr	37400.00	-3.14	32.61		33.19	0.000363	6.24	8098.34	995.75	0.23
D100-00-00_0008	31614	1PCT_100yr	39577.00	-3.14	33.91		34.47	0.000326	6.14	9520.76	1225.25	0.22
D100-00-00_0008	31614	0.2PCT_500yr	45556.00	-3.14	36.47		37.00	0.000281	6.10	13235.38	2555.83	0.21
D100-00-00_0008	31444	10PCT_10yr	32912.00	-2.12	30.11		30.59	0.000311	5.60	6104.78	438.64	0.21
D100-00-00_0008	31444	2PCT_50yr	37400.00	-2.12	32.62		33.11	0.000271	5.64	7907.64	1129.80	0.20
D100-00-00_0008	31444	1PCT_100yr	39577.00	-2.12	33.92		34.39	0.000247	5.58	9544.28	1329.84	0.20
D100-00-00_0008	31444	0.2PCT_500yr	45556.00	-2.12	36.48		36.94	0.000219	5.61	13496.76	2810.72	0.19
D100-00-00_0008	31142	10PCT_10yr	32912.00	-2.12	30.02	13.50	30.48	0.000336	5.47	6016.26	312.91	0.22
D100-00-00_0008	31142	2PCT_50yr	37400.00	-2.12	32.55	14.47	33.01	0.000310	5.46	7058.74	746.59	0.21
D100-00-00_0008	31142	1PCT_100yr	39577.00	-2.12	33.85	14.91	34.30	0.000290	5.40	8281.53	1114.49	0.21
D100-00-00_0008	31142	0.2PCT_500yr	45556.00	-2.12	36.42	16.06	36.86	0.000253	5.39	12271.85	2959.20	0.20
D100-00-00_0008	31085		Bridge									
D100-00-00_0008	31029	10PCT_10yr	32912.00	-2.12	29.72		30.16	0.000332	5.30	6215.31	337.09	0.22
D100-00-00_0008	31029	2PCT_50yr	37400.00	-2.12	32.45		32.87	0.000288	5.21	7727.69	991.19	0.21
D100-00-00_0008	31029	1PCT_100yr	39577.00	-2.12	33.66		34.06	0.000267	5.15	9223.16	1535.25	0.20
D100-00-00_0008	31029	0.2PCT_500yr	45556.00	-2.12	36.14		36.53	0.000238	5.12	13671.67	2799.11	0.19
D100-00-00_0008	30935	10PCT_10yr	32912.00	-2.12	29.63		30.11	0.000351	5.59	6302.39	555.78	0.23
D100-00-00_0008	30935	2PCT_50yr	37400.00	-2.12	32.38		32.83	0.000297	5.45	8609.77	1197.94	0.21
D100-00-00_0008	30935	1PCT_100yr	39577.00	-2.12	33.59		34.03	0.000273	5.38	10331.98	1557.86	0.20
D100-00-00_0008	30935	0.2PCT_500yr	45556.00	-2.12	36.09		36.50	0.000233	5.34	14768.74	3005.59	0.19
D100-00-00_0008	30831	10PCT_10yr	32912.00	-2.12	29.56	13.19	30.07	0.000368	5.82	7564.71	776.89	0.23
D100-00-00_0008	30831	2PCT_50yr	37400.00	-2.12	32.34	14.24	32.79	0.000315	5.62	10090.70	1211.74	0.22
D100-00-00_0008	30831	1PCT_100yr	39577.00	-2.12	33.55	14.73	34.00	0.000308	5.57	11846.22	1598.20	0.21
D100-00-00_0008	30831	0.2PCT_500yr	45556.00	-2.12	36.06	16.03	36.48	0.000258	5.48	16381.35	2762.48	0.20
D100-00-00_0008	30825		Bridge									
D100-00-00_0008	30820	10PCT_10yr	32912.00	-2.12	29.48		30.00	0.000416	5.95	7645.84	796.94	0.24
D100-00-00_0008	30820	2PCT_50yr	37400.00	-2.12	32.21		32.68	0.000350	5.72	10148.48	1168.16	0.22
D100-00-00_0008	30820	1PCT_100yr	39577.00	-2.12	33.48		33.93	0.000331	5.65	11953.80	1587.26	0.22

HEC-RAS Plan: RevEx River: D100-00-00 Reach: D100-00-00_0008 (Continued)

Reach	River Sta	Profile	Q Total	Min Ch El	W.S. Elev	Crit W.S.	E.G. Elev	E.G. Slope	Vel Chnl	Flow Area	Top Width	Froude # Chl
			(cfs)	(ft)	(ft)	(ft)	(ft)	(ft/ft)	(ft/s)	(sq ft)	(ft)	
D100-00-00_0008	30820	0.2PCT_500yr	45556.00	-2.12	35.98		36.40	0.000275	5.54	16403.44	2643.67	0.20
D100-00-00_0008	30499	10PCT_10yr	32912.00	-2.12	29.34		29.87	0.000426	6.01	7534.04	787.43	0.24
D100-00-00_0008	30499	2PCT_50yr	37400.00	-2.12	32.10		32.57	0.000356	5.75	10020.77	1091.16	0.23
D100-00-00_0008	30499	1PCT_100yr	39577.00	-2.12	33.37		33.83	0.000338	5.69	11783.52	1562.13	0.22
D100-00-00_0008	30499	0.2PCT_500yr	45556.00	-2.12	35.91		36.32	0.000274	5.52	16328.67	2507.19	0.20
D100-00-00_0008	29990	10PCT_10yr	32912.00	-5.55	29.22		29.66	0.000307	5.47	7603.33	611.62	0.21
D100-00-00_0008	29990	2PCT_50yr	37400.00	-5.55	31.98		32.40	0.000274	5.33	9640.99	828.19	0.20
D100-00-00_0008	29990	1PCT_100yr	39577.00	-5.55	33.26		33.67	0.000250	5.29	10782.22	1006.54	0.19
D100-00-00_0008	29990	0.2PCT_500yr	45556.00	-5.55	35.77		36.20	0.000232	5.45	14564.59	2218.02	0.19
D100-00-00_0008	29616	10PCT_10yr	32912.00	-5.55	29.10		29.55	0.000302	5.36	6176.38	379.01	0.21
D100-00-00_0008	29616	2PCT_50yr	37400.00	-5.55	31.86		32.30	0.000269	5.32	7589.92	840.48	0.20
D100-00-00_0008	29616	1PCT_100yr	39577.00	-5.55	33.14		33.57	0.000248	5.28	8635.58	1235.72	0.19
D100-00-00_0008	29616	0.2PCT_500yr	45556.00	-5.55	35.68		36.11	0.000222	5.36	11970.04	2527.71	0.19
D100-00-00_0008	29258	10PCT_10yr	32912.00	-6.59	29.08	8.71	29.38	0.000241	4.45	7399.14	411.94	0.19
D100-00-00_0008	29258	2PCT_50yr	37400.00	-6.59	31.85	9.75	32.14	0.000202	4.35	9364.32	1028.36	0.17
D100-00-00_0008	29258	1PCT_100yr	39577.00	-6.59	33.14	10.23	33.42	0.000186	4.28	10861.38	1290.60	0.17
D100-00-00_0008	29258	0.2PCT_500yr	45556.00	-6.59	35.69	11.49	35.96	0.000164	4.24	15583.52	2669.26	0.16
D100-00-00_0008	29243		Bridge									
D100-00-00_0008	29236	10PCT_10yr	32912.00	1.60	28.65		29.25	0.000374	6.28	5585.99	465.20	0.24
D100-00-00_0008	29236	2PCT_50yr	37400.00	1.60	31.43		32.02	0.000313	6.23	7922.71	1565.98	0.22
D100-00-00_0008	29236	1PCT_100yr	39577.00	1.60	32.76		33.32	0.000282	6.13	9653.96	1869.60	0.21
D100-00-00_0008	29236	0.2PCT_500yr	45556.00	1.60	35.32		35.86	0.000248	6.13	13693.04	2701.29	0.20
D100-00-00_0008	28978	10PCT_10yr	32912.00	-12.60	28.74		29.01	0.000245	4.38	11979.22	1469.21	0.18
D100-00-00_0008	28978	2PCT_50yr	37400.00	-12.60	31.55		31.78	0.000194	4.07	16524.14	2025.48	0.17
D100-00-00_0008	28978	1PCT_100yr	39577.00	-12.60	32.88		33.08	0.000176	3.92	19199.62	2239.49	0.16
D100-00-00_0008	28978	0.2PCT_500yr	45556.00	-12.60	35.46		35.63	0.000147	3.72	24966.66	2552.14	0.15
D100-00-00_0008	28931	10PCT_10yr	32912.00	-12.60	28.51	7.85	28.95	0.000276	5.32	7005.09	629.03	0.20
D100-00-00_0008	28931	2PCT_50yr	37400.00	-12.60	31.29	9.11	31.71	0.000231	5.28	9217.35	993.27	0.19
D100-00-00_0008	28931	1PCT_100yr	39577.00	-12.60	32.60	9.89	33.01	0.000212	5.23	10633.92	1141.32	0.18
D100-00-00_0008	28931	0.2PCT_500yr	45556.00	-12.60	35.14	11.58	35.55	0.000192	5.31	13871.38	1361.12	0.18
D100-00-00_0008	28897		Bridge									
D100-00-00_0008	28864	10PCT_10yr	32912.00	-12.60	28.43		28.89	0.000276	5.45	6346.54	335.97	0.20
D100-00-00_0008	28864	2PCT_50yr	37400.00	-12.60	31.19		31.65	0.000255	5.47	7600.78	673.81	0.20
D100-00-00_0008	28864	1PCT_100yr	39577.00	-12.60	32.49		32.95	0.000236	5.45	8645.12	917.32	0.19
D100-00-00_0008	28864	0.2PCT_500yr	45556.00	-12.60	35.00		35.46	0.000219	5.59	11380.66	1295.89	0.19
D100-00-00_0008	28685	10PCT_10yr	32912.00	-12.60	28.36	7.93	28.83	0.000295	5.54	5936.45	266.56	0.21
D100-00-00_0008	28685	2PCT_50yr	37400.00	-12.60	31.11	9.31	31.59	0.000273	5.59	6685.59	277.94	0.20
D100-00-00_0008	28685	1PCT_100yr	39577.00	-12.60	32.40	9.90	32.89	0.000263	5.61	7049.17	283.24	0.20
D100-00-00_0008	28685	0.2PCT_500yr	45556.00	-12.60	34.87	11.47	35.40	0.000274	5.87	7763.35	300.50	0.20
D100-00-00_0008	28640		Bridge									
D100-00-00_0008	28622	10PCT_10yr	32912.00	-12.60	28.19		28.73	0.000428	5.92	5559.34	314.06	0.24
D100-00-00_0008	28622	2PCT_50yr	37400.00	-12.60	30.98		31.49	0.000383	5.76	6881.50	609.53	0.23
D100-00-00_0008	28622	1PCT_100yr	39577.00	-12.60	32.29		32.79	0.000353	5.67	7734.41	724.58	0.22
D100-00-00_0008	28622	0.2PCT_500yr	45556.00	-12.60	34.78		35.27	0.000332	5.67	9790.76	1278.34	0.22
D100-00-00_0008	28252	10PCT_10yr	32912.00	-12.60	28.12		28.55	0.000279	5.29	6538.13	452.85	0.20
D100-00-00_0008	28252	2PCT_50yr	37400.00	-12.60	30.91		31.34	0.000235	5.27	8060.89	703.16	0.19
D100-00-00_0008	28252	1PCT_100yr	39577.00	-12.60	32.23		32.65	0.000217	5.25	9096.44	873.92	0.18
D100-00-00_0008	28252	0.2PCT_500yr	45556.00	-12.60	34.72		35.15	0.000201	5.38	11841.46	1429.76	0.18
D100-00-00_0008	27788	10PCT_10yr	33478.00	-12.60	27.86		28.39	0.000361	5.87	5702.78	276.79	0.23
D100-00-00_0008	27788	2PCT_50yr	38159.00	-12.60	30.67		31.20	0.000331	5.84	6956.66	716.44	0.22
D100-00-00_0008	27788	1PCT_100yr	40344.00	-12.60	32.01		32.52	0.000312	5.76	8414.28	1577.20	0.21
D100-00-00_0008	27788	0.2PCT_500yr	46368.00	-12.60	34.55		35.03	0.000282	5.73	11724.14	1991.16	0.21
D100-00-00_0008	26715	10PCT_10yr	33478.00	-12.69	27.41		27.99	0.000381	6.15	5656.82	402.59	0.23
D100-00-00_0008	26715	2PCT_50yr	38159.00	-12.69	30.27		30.85	0.000320	6.13	7186.95	799.34	0.22
D100-00-00_0008	26715	1PCT_100yr	40344.00	-12.69	31.63		32.19	0.000293	6.08	8185.96	1556.91	0.21
D100-00-00_0008	26715	0.2PCT_500yr	46368.00	-12.69	34.16		34.73	0.000270	6.21	10133.85	2648.00	0.21
D100-00-00_0008	25614	10PCT_10yr	33478.00	-10.37	26.96		27.56	0.000407	6.22	5800.66	535.18	0.24
D100-00-00_0008	25614	2PCT_50yr	38159.00	-10.37	29.92		30.49	0.000328	6.09	7613.17	681.18	0.22
D100-00-00_0008	25614	1PCT_100yr	40344.00	-10.37	31.32		31.86	0.000297	6.02	8604.30	773.76	0.21
D100-00-00_0008	25614	0.2PCT_500yr	46368.00	-10.37	33.87		34.42	0.000269	6.12	10644.56	1599.62	0.21
D100-00-00_0008	25321	10PCT_10yr	33478.00	-10.37	26.83	8.56	27.43	0.000415	6.26	5730.51	530.92	0.24
D100-00-00_0008	25321	2PCT_50yr	38159.00	-10.37	29.81	10.04	30.39	0.000334	6.13	7541.65	676.82	0.22
D100-00-00_0008	25321	1PCT_100yr	40344.00	-10.37	31.22	10.68	31.77	0.000301	6.04	8532.09	763.82	0.21

HEC-RAS Plan: RevEx River: D100-00-00 Reach: D100-00-00_0008 (Continued)

Reach	River Sta	Profile	Q Total	Min Ch El	W.S. Elev	Crit W.S.	E.G. Elev	E.G. Slope	Vel Chnl	Flow Area	Top Width	Froude # Chl
			(cfs)	(ft)	(ft)	(ft)	(ft)	(ft/ft)	(ft/s)	(sq ft)	(ft)	
D100-00-00_0008	25321	0.2PCT_500yr	46368.00	-10.37	33.79	12.65	34.34	0.000272	6.14	10576.08	1590.69	0.21
D100-00-00_0008	25316		Bridge									
D100-00-00_0008	25311	10PCT_10yr	33478.00	-10.37	26.62		27.25	0.000428	6.33	5623.59	523.86	0.25
D100-00-00_0008	25311	2PCT_50yr	38159.00	-10.37	29.70		30.28	0.000340	6.16	7466.34	672.22	0.23
D100-00-00_0008	25311	1PCT_100yr	40344.00	-10.37	31.15		31.70	0.000304	6.06	8477.46	735.02	0.22
D100-00-00_0008	25311	0.2PCT_500yr	46368.00	-10.37	33.77		34.33	0.000273	6.14	10557.94	1582.90	0.21
D100-00-00_0008	24997	10PCT_10yr	33478.00	-11.77	26.66		27.01	0.000245	4.77	7339.65	540.59	0.19
D100-00-00_0008	24997	2PCT_50yr	38159.00	-11.77	29.75		30.08	0.000203	4.64	9352.64	740.06	0.18
D100-00-00_0008	24997	1PCT_100yr	40344.00	-11.77	31.20		31.51	0.000181	4.57	10503.47	881.38	0.17
D100-00-00_0008	24997	0.2PCT_500yr	46368.00	-11.77	33.83		34.15	0.000161	4.63	12961.57	1522.09	0.16
D100-00-00_0008	24726	10PCT_10yr	33478.00	-11.77	26.36	8.84	26.88	0.000357	5.82	6120.76	391.30	0.23
D100-00-00_0008	24726	2PCT_50yr	38159.00	-11.77	29.46	9.99	29.96	0.000284	5.71	8051.64	835.32	0.21
D100-00-00_0008	24726	1PCT_100yr	40344.00	-11.77	30.93	10.50	31.41	0.000253	5.61	9305.72	919.14	0.20
D100-00-00_0008	24726	0.2PCT_500yr	46368.00	-11.77	33.58	11.82	34.05	0.000226	5.67	11822.28	1509.90	0.19
D100-00-00_0008	24697		Bridge									
D100-00-00_0008	24668	10PCT_10yr	33478.00	-11.77	26.23		26.75	0.000381	5.79	6000.21	442.05	0.23
D100-00-00_0008	24668	2PCT_50yr	38159.00	-11.77	29.22		29.71	0.000300	5.66	7564.46	714.27	0.21
D100-00-00_0008	24668	1PCT_100yr	40344.00	-11.77	30.65		31.12	0.000269	5.58	8759.62	1036.19	0.20
D100-00-00_0008	24668	0.2PCT_500yr	46368.00	-11.77	33.42		33.88	0.000232	5.59	11539.94	1406.78	0.19
D100-00-00_0008	24312	10PCT_10yr	33478.00	-11.77	26.05		26.60	0.000374	5.98	5663.50	325.07	0.23
D100-00-00_0008	24312	2PCT_50yr	38159.00	-11.77	29.05		29.59	0.000306	5.92	6902.51	657.35	0.22
D100-00-00_0008	24312	1PCT_100yr	40344.00	-11.77	30.48		31.01	0.000278	5.87	7819.79	1091.54	0.21
D100-00-00_0008	24312	0.2PCT_500yr	46368.00	-11.77	33.24		33.77	0.000247	5.93	10434.49	1885.15	0.20
D100-00-00_0008	24046	10PCT_10yr	33478.00	-11.77	25.89		26.49	0.000389	6.28	6119.38	580.93	0.24
D100-00-00_0008	24046	2PCT_50yr	38159.00	-11.77	28.94		29.51	0.000312	6.15	8293.54	837.74	0.22
D100-00-00_0008	24046	1PCT_100yr	40344.00	-11.77	30.40		30.93	0.000279	6.04	9525.95	902.48	0.21
D100-00-00_0008	24046	0.2PCT_500yr	46368.00	-11.77	33.18		33.71	0.000246	6.06	11909.45	1994.27	0.20
D100-00-00_0008	23789	10PCT_10yr	33478.00	-7.29	25.74		26.39	0.000419	6.48	5872.88	501.30	0.25
D100-00-00_0008	23789	2PCT_50yr	38159.00	-7.29	28.82		29.42	0.000367	6.29	7740.92	692.21	0.24
D100-00-00_0008	23789	1PCT_100yr	40344.00	-7.29	30.29		30.85	0.000323	6.15	8788.10	881.47	0.22
D100-00-00_0008	23789	0.2PCT_500yr	46368.00	-7.29	33.09		33.64	0.000278	6.15	10808.85	1666.91	0.21
D100-00-00_0008	23527	10PCT_10yr	33478.00	-7.29	25.61	9.52	26.27	0.000468	6.49	5328.24	553.84	0.26
D100-00-00_0008	23527	2PCT_50yr	38159.00	-7.29	28.73	10.59	29.32	0.000361	6.22	7928.99	1384.43	0.23
D100-00-00_0008	23527	1PCT_100yr	40344.00	-7.29	30.22	11.07	30.76	0.000312	6.05	9415.47	1602.09	0.22
D100-00-00_0008	23527	0.2PCT_500yr	46368.00	-7.29	33.04	12.34	33.55	0.000262	5.97	12240.09	2365.71	0.20
D100-00-00_0008	23488		Bridge									
D100-00-00_0008	23449	10PCT_10yr	33478.00	-7.29	25.41		26.10	0.000448	6.66	5135.08	456.27	0.26
D100-00-00_0008	23449	2PCT_50yr	38159.00	-7.29	28.33		28.98	0.000364	6.52	7676.66	1429.38	0.23
D100-00-00_0008	23449	1PCT_100yr	40344.00	-7.29	29.84		30.44	0.000318	6.34	9217.05	1637.50	0.22
D100-00-00_0008	23449	0.2PCT_500yr	46368.00	-7.29	32.80		33.35	0.000265	6.24	12253.79	2239.20	0.21
D100-00-00_0008	22782	10PCT_10yr	33478.00	-13.33	25.15		25.78	0.000420	6.34	5423.68	347.84	0.25
D100-00-00_0008	22782	2PCT_50yr	38159.00	-13.33	28.11		28.72	0.000344	6.27	6597.06	824.49	0.23
D100-00-00_0008	22782	1PCT_100yr	40344.00	-13.33	29.64		30.22	0.000308	6.19	7675.46	1977.51	0.22
D100-00-00_0008	22782	0.2PCT_500yr	46368.00	-13.33	32.59		33.17	0.000267	6.20	9999.51	2742.99	0.21
D100-00-00_0008	22550	10PCT_10yr	33478.00	-11.02	25.07	8.43	25.65	0.000485	6.10	5485.07	323.01	0.26
D100-00-00_0008	22550	2PCT_50yr	38159.00	-11.02	28.06	9.58	28.61	0.000368	5.92	6734.15	988.40	0.23
D100-00-00_0008	22550	1PCT_100yr	40344.00	-11.02	29.60	10.10	30.11	0.000319	5.78	7831.18	1204.39	0.22
D100-00-00_0008	22550	0.2PCT_500yr	46368.00	-11.02	32.57	11.57	33.07	0.000264	5.72	10334.23	2315.74	0.20
D100-00-00_0008	22470		Bridge									
D100-00-00_0008	22390	10PCT_10yr	33478.00	-11.02	24.87		25.46	0.000501	6.18	5419.61	318.53	0.26
D100-00-00_0008	22390	2PCT_50yr	38159.00	-11.02	27.81		28.37	0.000385	6.00	6501.23	689.74	0.24
D100-00-00_0008	22390	1PCT_100yr	40344.00	-11.02	29.23		29.77	0.000339	5.90	7447.96	1070.87	0.22
D100-00-00_0008	22390	0.2PCT_500yr	46368.00	-11.02	32.04		32.57	0.000286	5.88	9792.86	2168.64	0.21
D100-00-00_0008	21953	10PCT_10yr	35602.00	-11.40	24.33		25.15	0.000572	7.29	4885.56	249.88	0.29
D100-00-00_0008	21953	2PCT_50yr	41293.00	-11.40	27.25		28.09	0.000520	7.36	5715.03	590.96	0.28
D100-00-00_0008	21953	1PCT_100yr	43864.00	-11.40	28.67		29.50	0.000480	7.33	6175.97	860.80	0.27
D100-00-00_0008	21953	0.2PCT_500yr	50878.00	-11.40	31.43		32.31	0.000440	7.55	7412.97	1792.90	0.26
D100-00-00_0008	21626	10PCT_10yr	35602.00	-11.40	24.22		24.94	0.000537	6.81	5230.65	286.29	0.28
D100-00-00_0008	21626	2PCT_50yr	41293.00	-11.40	27.17		27.89	0.000445	6.81	6362.76	1176.01	0.26
D100-00-00_0008	21626	1PCT_100yr	43864.00	-11.40	28.62		29.32	0.000401	6.75	7224.18	1459.39	0.25
D100-00-00_0008	21626	0.2PCT_500yr	50878.00	-11.40	31.41		32.13	0.000358	6.88	9260.12	2127.98	0.24
D100-00-00_0008	21379	10PCT_10yr	35602.00	-22.87	24.03	3.13	24.80	0.000478	7.03	5083.89	344.58	0.26

HEC-RAS Plan: RevEx River: D100-00-00 Reach: D100-00-00_0008 (Continued)

Reach	River Sta	Profile	Q Total	Min Ch El	W.S. Elev	Crit W.S.	E.G. Elev	E.G. Slope	Vel Chnl	Flow Area	Top Width	Froude # Chl
			(cfs)	(ft)	(ft)	(ft)	(ft)	(ft/ft)	(ft/s)	(sq ft)	(ft)	
D100-00-00_0008	21379	2PCT_50yr	41293.00	-22.87	26.98	5.04	27.77	0.000441	7.13	6678.63	1146.73	0.25
D100-00-00_0008	21379	1PCT_100yr	43864.00	-22.87	28.45	5.84	29.21	0.000400	7.06	7785.88	1213.54	0.24
D100-00-00_0008	21379	0.2PCT_500yr	50878.00	-22.87	31.27	7.78	32.03	0.000361	7.18	9912.35	1899.55	0.24
D100-00-00_0008	21331		Bridge									
D100-00-00_0008	21277	10PCT_10yr	35602.00	-22.87	23.42		24.23	0.000500	7.20	4961.00	234.88	0.27
D100-00-00_0008	21277	2PCT_50yr	41293.00	-22.87	25.97		26.84	0.000492	7.47	5842.28	709.94	0.27
D100-00-00_0008	21277	1PCT_100yr	43864.00	-22.87	27.29		28.16	0.000461	7.49	6604.25	941.17	0.26
D100-00-00_0008	21277	0.2PCT_500yr	50878.00	-22.87	30.15		31.04	0.000417	7.64	8573.23	1294.32	0.25
D100-00-00_0008	21124	10PCT_10yr	35602.00	-22.87	23.43		24.08	0.000420	6.48	5561.53	300.34	0.25
D100-00-00_0008	21124	2PCT_50yr	41293.00	-22.87	25.99		26.69	0.000386	6.70	6631.99	562.68	0.24
D100-00-00_0008	21124	1PCT_100yr	43864.00	-22.87	27.32		28.01	0.000361	6.71	7389.52	582.60	0.23
D100-00-00_0008	21124	0.2PCT_500yr	50878.00	-22.87	30.18		30.90	0.000330	6.88	9130.24	715.32	0.23
D100-00-00_0008	20678	10PCT_10yr	35602.00	-14.56	23.14		23.87	0.000528	6.82	5265.63	326.52	0.27
D100-00-00_0008	20678	2PCT_50yr	41293.00	-14.56	25.74		26.49	0.000474	6.98	6217.42	444.43	0.26
D100-00-00_0008	20678	1PCT_100yr	43864.00	-14.56	27.08		27.83	0.000438	6.97	6732.38	575.18	0.25
D100-00-00_0008	20678	0.2PCT_500yr	50878.00	-14.56	29.94		30.73	0.000398	7.17	7868.25	765.56	0.24
D100-00-00_0008	20369	10PCT_10yr	35602.00	-13.60	22.86		23.69	0.000564	7.29	4970.49	369.06	0.29
D100-00-00_0008	20369	2PCT_50yr	41293.00	-13.60	25.46		26.33	0.000505	7.47	5715.68	537.96	0.28
D100-00-00_0008	20369	1PCT_100yr	43864.00	-13.60	26.81		27.67	0.000469	7.48	6119.40	648.41	0.27
D100-00-00_0008	20369	0.2PCT_500yr	50878.00	-13.60	29.67		30.59	0.000432	7.73	7017.32	820.93	0.26
D100-00-00_0008	19984	10PCT_10yr	35602.00	-13.60	22.73	7.50	23.37	0.000604	6.40	5559.80	355.08	0.29
D100-00-00_0008	19984	2PCT_50yr	41293.00	-13.60	25.39	9.09	26.01	0.000514	6.32	6534.60	377.22	0.27
D100-00-00_0008	19984	1PCT_100yr	43864.00	-13.60	26.76	9.78	27.36	0.000464	6.21	7059.51	386.81	0.26
D100-00-00_0008	19984	0.2PCT_500yr	50878.00	-13.60	29.67	11.54	30.27	0.000395	6.19	8263.07	1374.10	0.24
D100-00-00_0008	19830		Bridge									
D100-00-00_0008	19676	10PCT_10yr	35602.00	-13.60	21.71		22.38	0.000647	6.55	5436.01	449.73	0.29
D100-00-00_0008	19676	2PCT_50yr	41293.00	-13.60	24.37		25.02	0.000529	6.46	6390.66	554.87	0.27
D100-00-00_0008	19676	1PCT_100yr	43864.00	-13.60	25.63		26.27	0.000488	6.40	6853.64	578.11	0.26
D100-00-00_0008	19676	0.2PCT_500yr	50878.00	-13.60	28.33		28.98	0.000430	6.45	7908.63	833.34	0.25
D100-00-00_0008	19298	10PCT_10yr	35602.00	-13.60	21.13		22.04	0.000817	7.62	4670.00	286.78	0.33
D100-00-00_0008	19298	2PCT_50yr	41293.00	-13.60	23.85		24.73	0.000701	7.50	5646.08	587.77	0.31
D100-00-00_0008	19298	1PCT_100yr	43864.00	-13.60	25.15		25.99	0.000622	7.41	6376.92	732.53	0.30
D100-00-00_0008	19298	0.2PCT_500yr	50878.00	-13.60	27.91		28.74	0.000518	7.39	8053.89	971.78	0.28
D100-00-00_0008	18545	10PCT_10yr	35602.00	-15.41	20.72		21.47	0.000595	6.92	5141.10	283.78	0.29
D100-00-00_0008	18545	2PCT_50yr	41293.00	-15.41	23.48		24.22	0.000553	6.91	6028.39	373.03	0.28
D100-00-00_0008	18545	1PCT_100yr	43864.00	-15.41	24.81		25.54	0.000502	6.85	6600.74	525.07	0.27
D100-00-00_0008	18545	0.2PCT_500yr	50878.00	-15.41	27.63		28.36	0.000426	6.88	8590.54	974.22	0.25
D100-00-00_0008	17780	10PCT_10yr	35602.00	-17.97	20.46		21.08	0.000358	6.48	7593.97	675.13	0.23
D100-00-00_0008	17780	2PCT_50yr	41293.00	-17.97	23.25		23.87	0.000322	6.57	9600.33	768.22	0.22
D100-00-00_0008	17780	1PCT_100yr	43864.00	-17.97	24.61		25.21	0.000300	6.55	10704.80	923.81	0.22
D100-00-00_0008	17780	0.2PCT_500yr	50878.00	-17.97	27.46		28.07	0.000274	6.67	13208.48	1077.63	0.21
D100-00-00_0008	16169	10PCT_10yr	35602.00	-14.46	19.55		20.35	0.000562	7.22	5549.14	551.24	0.28
D100-00-00_0008	16169	2PCT_50yr	41293.00	-14.46	22.44		23.23	0.000468	7.22	6817.60	622.95	0.27
D100-00-00_0008	16169	1PCT_100yr	43864.00	-14.46	23.85		24.62	0.000427	7.17	7446.43	666.70	0.26
D100-00-00_0008	16169	0.2PCT_500yr	50878.00	-14.46	26.73		27.52	0.000385	7.34	8761.29	739.10	0.25
D100-00-00_0008	15153	10PCT_10yr	35602.00	-17.85	18.97		19.73	0.000646	7.00	5275.19	498.10	0.30
D100-00-00_0008	15153	2PCT_50yr	41293.00	-17.85	22.00		22.71	0.000512	6.79	6882.17	581.70	0.27
D100-00-00_0008	15153	1PCT_100yr	43864.00	-17.85	23.48		24.15	0.000446	6.65	7868.77	713.14	0.26
D100-00-00_0008	15153	0.2PCT_500yr	50878.00	-17.85	26.44		27.10	0.000375	6.65	10260.47	974.18	0.24
D100-00-00_0008	14911	10PCT_10yr	35602.00	-17.85	18.48	3.39	19.49	0.000732	8.03	4431.35	222.87	0.32
D100-00-00_0008	14911	2PCT_50yr	41293.00	-17.85	21.47	4.88	22.48	0.000675	8.05	5143.62	267.10	0.31
D100-00-00_0008	14911	1PCT_100yr	43864.00	-17.85	22.94	5.53	23.93	0.000608	7.98	5647.60	437.99	0.30
D100-00-00_0008	14911	0.2PCT_500yr	50878.00	-17.85	25.90	7.18	26.89	0.000526	8.06	7948.54	1111.28	0.28
D100-00-00_0008	14870		Bridge									
D100-00-00_0008	14793	10PCT_10yr	35602.00	-17.85	18.12		19.01	0.000685	7.57	4703.70	251.49	0.31
D100-00-00_0008	14793	2PCT_50yr	41293.00	-17.85	20.69		21.60	0.000656	7.67	5414.02	342.97	0.30
D100-00-00_0008	14793	1PCT_100yr	43864.00	-17.85	21.92		22.83	0.000603	7.66	5900.85	440.46	0.30
D100-00-00_0008	14793	0.2PCT_500yr	50878.00	-17.85	24.70		25.63	0.000524	7.76	7905.45	1061.20	0.28
D100-00-00_0008	14560	10PCT_10yr	35602.00	-17.85	18.08		18.78	0.000460	6.80	6598.45	642.66	0.26
D100-00-00_0008	14560	2PCT_50yr	41293.00	-17.85	20.68		21.37	0.000399	6.84	8494.13	854.62	0.25
D100-00-00_0008	14560	1PCT_100yr	43864.00	-17.85	21.93		22.61	0.000369	6.81	9654.36	978.27	0.24
D100-00-00_0008	14560	0.2PCT_500yr	50878.00	-17.85	24.74		25.40	0.000326	6.87	12588.82	1100.08	0.23
D100-00-00_0008	14058	10PCT_10yr	35602.00	-17.51	17.68		18.51	0.000578	7.51	6048.63	675.54	0.29

HEC-RAS Plan: RevEx River: D100-00-00 Reach: D100-00-00_0008 (Continued)

Reach	River Sta	Profile	Q Total	Min Ch El	W.S. Elev	Crit W.S.	E.G. Elev	E.G. Slope	Vel Chnl	Flow Area	Top Width	Froude # Chl
			(cfs)	(ft)	(ft)	(ft)	(ft)	(ft/ft)	(ft/s)	(sq ft)	(ft)	
D100-00-00_0008	14058	2PCT_50yr	41293.00	-17.51	20.31		21.13	0.000501	7.53	8053.66	817.66	0.27
D100-00-00_0008	14058	1PCT_100yr	43864.00	-17.51	21.59		22.39	0.000460	7.47	9121.21	848.44	0.26
D100-00-00_0008	14058	0.2PCT_500yr	50878.00	-17.51	24.42		25.21	0.000407	7.55	11637.62	985.94	0.25
D100-00-00_0008	13527	10PCT_10yr	35602.00	-18.03	17.33		18.19	0.000609	7.54	5491.69	469.81	0.30
D100-00-00_0008	13527	2PCT_50yr	41293.00	-18.03	19.99		20.86	0.000526	7.60	6893.05	582.11	0.28
D100-00-00_0008	13527	1PCT_100yr	43864.00	-18.03	21.28		22.13	0.000486	7.57	7676.87	634.20	0.27
D100-00-00_0008	13527	0.2PCT_500yr	50878.00	-18.03	24.11		24.98	0.000432	7.69	9697.13	793.11	0.26
D100-00-00_0008	12161	10PCT_10yr	37545.00	-15.55	16.63		17.34	0.000570	7.32	9020.43	845.06	0.29
D100-00-00_0008	12161	2PCT_50yr	44124.00	-15.55	19.45		20.12	0.000469	7.24	11493.94	920.14	0.26
D100-00-00_0008	12161	1PCT_100yr	47258.00	-15.55	20.78		21.45	0.000436	7.25	12771.48	992.60	0.26
D100-00-00_0008	12161	0.2PCT_500yr	55389.00	-15.55	23.67		24.36	0.000397	7.45	16063.78	1349.97	0.25
D100-00-00_0008	11228	10PCT_10yr	37545.00	-14.96	16.09		16.76	0.000593	6.77	7677.90	841.73	0.29
D100-00-00_0008	11228	2PCT_50yr	44124.00	-14.96	19.04		19.65	0.000448	6.54	10254.94	985.25	0.26
D100-00-00_0008	11228	1PCT_100yr	47258.00	-14.96	20.43		21.01	0.000396	6.43	11561.78	1017.88	0.24
D100-00-00_0008	11228	0.2PCT_500yr	55389.00	-14.96	23.41		23.96	0.000331	6.40	14518.85	1291.32	0.23
D100-00-00_0008	10615	10PCT_10yr	37545.00	-17.98	15.53		16.36	0.000678	7.31	5138.78	379.52	0.31
D100-00-00_0008	10615	2PCT_50yr	44124.00	-17.98	18.49		19.32	0.000556	7.33	6357.51	730.75	0.28
D100-00-00_0008	10615	1PCT_100yr	47258.00	-17.98	19.88		20.71	0.000509	7.33	7056.05	818.69	0.28
D100-00-00_0008	10615	0.2PCT_500yr	55389.00	-17.98	22.84		23.69	0.000448	7.48	8579.84	1016.80	0.26
D100-00-00_0008	10377	10PCT_10yr	37545.00	-17.98	15.25	-0.17	16.17	0.000673	7.72	4867.42	256.40	0.31
D100-00-00_0008	10377	2PCT_50yr	44124.00	-17.98	18.19	1.42	19.15	0.000579	7.86	5892.41	564.82	0.29
D100-00-00_0008	10377	1PCT_100yr	47258.00	-17.98	19.59	2.07	20.55	0.000539	7.89	6521.51	682.50	0.28
D100-00-00_0008	10377	0.2PCT_500yr	55389.00	-17.98	22.52	3.71	23.53	0.000491	8.14	7846.66	795.49	0.28
D100-00-00_0008	10347		Bridge									
D100-00-00_0008	10318	10PCT_10yr	37545.00	-17.98	15.05		16.00	0.000671	7.78	4847.54	273.33	0.31
D100-00-00_0008	10318	2PCT_50yr	44124.00	-17.98	17.72		18.70	0.000660	7.99	5870.06	609.89	0.31
D100-00-00_0008	10318	1PCT_100yr	47258.00	-17.98	18.96		19.95	0.000619	8.04	6420.35	680.06	0.30
D100-00-00_0008	10318	0.2PCT_500yr	55389.00	-17.98	22.03		23.04	0.000539	8.18	7779.23	878.38	0.29
D100-00-00_0008	10097	10PCT_10yr	37545.00	-17.98	14.98		15.78	0.000640	7.21	5237.02	458.38	0.30
D100-00-00_0008	10097	2PCT_50yr	44124.00	-17.98	17.66		18.50	0.000556	7.36	6171.01	799.42	0.29
D100-00-00_0008	10097	1PCT_100yr	47258.00	-17.98	18.90		19.76	0.000522	7.42	6661.91	832.11	0.28
D100-00-00_0008	10097	0.2PCT_500yr	55389.00	-17.98	21.98		22.87	0.000457	7.58	7871.93	954.87	0.27
D100-00-00_0008	9432	10PCT_10yr	37545.00	-24.77	14.62		15.39	0.000531	7.03	5343.43	310.10	0.27
D100-00-00_0008	9432	2PCT_50yr	44124.00	-24.77	17.31		18.13	0.000523	7.26	6079.19	361.44	0.28
D100-00-00_0008	9432	1PCT_100yr	47258.00	-24.77	18.57		19.41	0.000516	7.34	6450.75	392.38	0.27
D100-00-00_0008	9432	0.2PCT_500yr	55389.00	-24.77	21.68		22.55	0.000491	7.49	7685.07	917.84	0.27
D100-00-00_0008	9098	10PCT_10yr	37545.00	-18.78	14.51		15.20	0.000438	6.67	5632.37	260.89	0.25
D100-00-00_0008	9098	2PCT_50yr	44124.00	-18.78	17.20		17.95	0.000443	6.94	6356.64	279.47	0.26
D100-00-00_0008	9098	1PCT_100yr	47258.00	-18.78	18.46		19.23	0.000448	7.04	6750.84	431.82	0.26
D100-00-00_0008	9098	0.2PCT_500yr	55389.00	-18.78	21.58		22.37	0.000458	7.14	8635.19	773.10	0.26
D100-00-00_0008	8826	10PCT_10yr	37545.00	-18.78	14.36	-2.38	15.07	0.000446	6.78	5706.23	400.98	0.25
D100-00-00_0008	8826	2PCT_50yr	44124.00	-18.78	17.07	-0.94	17.82	0.000455	7.02	6985.70	553.24	0.26
D100-00-00_0008	8826	1PCT_100yr	47258.00	-18.78	18.34	-0.31	19.10	0.000456	7.07	7734.01	627.76	0.26
D100-00-00_0008	8826	0.2PCT_500yr	55389.00	-18.78	21.47	1.22	22.23	0.000418	7.11	10189.66	1000.25	0.25
D100-00-00_0008	8794		Bridge									
D100-00-00_0008	8762	10PCT_10yr	37545.00	-18.78	14.21		14.88	0.000426	6.66	6884.79	611.28	0.25
D100-00-00_0008	8762	2PCT_50yr	44124.00	-18.78	16.83		17.52	0.000425	6.82	8612.04	706.72	0.25
D100-00-00_0008	8762	1PCT_100yr	47258.00	-18.78	18.02		18.71	0.000425	6.86	9482.86	753.31	0.25
D100-00-00_0008	8762	0.2PCT_500yr	55389.00	-18.78	20.98		21.67	0.000382	6.91	11969.37	1025.34	0.24
D100-00-00_0008	8452	10PCT_10yr	37545.00	-18.78	14.24		14.63	0.000311	5.15	10967.69	1294.07	0.21
D100-00-00_0008	8452	2PCT_50yr	44124.00	-18.78	16.90		17.25	0.000262	5.05	14633.68	1437.16	0.20
D100-00-00_0008	8452	1PCT_100yr	47258.00	-18.78	18.10		18.44	0.000246	4.99	16374.35	1488.68	0.19
D100-00-00_0008	8452	0.2PCT_500yr	55389.00	-18.78	21.09		21.40	0.000199	4.88	20875.52	1581.69	0.18
D100-00-00_0008	7918	10PCT_10yr	37545.00	-18.78	13.67		14.39	0.000455	6.83	5771.99	330.86	0.26
D100-00-00_0008	7918	2PCT_50yr	44124.00	-18.78	16.25		17.03	0.000438	7.12	6777.60	463.66	0.26
D100-00-00_0008	7918	1PCT_100yr	47258.00	-18.78	17.42		18.22	0.000425	7.24	7332.63	488.99	0.26
D100-00-00_0008	7918	0.2PCT_500yr	55389.00	-18.78	20.35		21.20	0.000393	7.50	9288.75	885.73	0.25
D100-00-00_0008	6676	10PCT_10yr	37545.00	-21.19	13.06		13.80	0.000491	6.90	5438.83	262.24	0.27
D100-00-00_0008	6676	2PCT_50yr	44124.00	-21.19	15.64		16.44	0.000505	7.18	6143.85	285.40	0.27
D100-00-00_0008	6676	1PCT_100yr	47258.00	-21.19	16.82		17.64	0.000515	7.29	6486.42	299.61	0.28
D100-00-00_0008	6676	0.2PCT_500yr	55389.00	-21.19	19.77		20.63	0.000533	7.45	7570.62	681.67	0.28
D100-00-00_0008	6087	10PCT_10yr	37545.00	-21.47	12.70		13.50	0.000542	7.15	5252.98	259.12	0.28
D100-00-00_0008	6087	2PCT_50yr	44124.00	-21.47	15.27		16.13	0.000552	7.42	5947.67	281.32	0.28
D100-00-00_0008	6087	1PCT_100yr	47258.00	-21.47	16.44		17.32	0.000560	7.52	6283.35	294.80	0.29

HEC-RAS Plan: RevEx River: D100-00-00 Reach: D100-00-00_0008 (Continued)

Reach	River Sta	Profile	Q Total	Min Ch El	W.S. Elev	Crit W.S.	E.G. Elev	E.G. Slope	Vel Chnl	Flow Area	Top Width	Froude # Chl
			(cfs)	(ft)	(ft)	(ft)	(ft)	(ft/ft)	(ft/s)	(sq ft)	(ft)	
D100-00-00_0008	6087	0.2PCT_500yr	55389.00	-21.47	19.38		20.30	0.000581	7.68	7263.04	512.77	0.29
D100-00-00_0008	5859	10PCT_10yr	37545.00	-21.47	12.60	-2.92	13.35	0.000525	6.97	5647.85	614.26	0.28
D100-00-00_0008	5859	2PCT_50yr	44124.00	-21.47	15.19	-1.41	15.98	0.000475	7.19	6767.82	734.94	0.27
D100-00-00_0008	5859	1PCT_100yr	47258.00	-21.47	16.36	-0.73	17.17	0.000457	7.29	7313.31	930.23	0.26
D100-00-00_0008	5859	0.2PCT_500yr	55389.00	-21.47	19.30	0.83	20.15	0.000413	7.50	8837.25	1417.95	0.26
D100-00-00_0008	5845		Bridge									
D100-00-00_0008	5832	10PCT_10yr	37545.00	-21.47	12.35		13.21	0.000466	7.47	5517.93	574.00	0.27
D100-00-00_0008	5832	2PCT_50yr	44124.00	-21.47	14.86		15.81	0.000455	7.89	6519.85	857.28	0.27
D100-00-00_0008	5832	1PCT_100yr	47258.00	-21.47	15.99		16.98	0.000450	8.07	7024.82	883.82	0.27
D100-00-00_0008	5832	0.2PCT_500yr	55389.00	-21.47	18.74		19.82	0.000439	8.48	8318.25	1245.81	0.27
D100-00-00_0008	5654	10PCT_10yr	37545.00	-21.47	12.28		13.10	0.000558	7.26	5173.60	360.20	0.28
D100-00-00_0008	5654	2PCT_50yr	44124.00	-21.47	14.80		15.69	0.000573	7.56	5835.35	411.38	0.29
D100-00-00_0008	5654	1PCT_100yr	47258.00	-21.47	15.94		16.85	0.000587	7.68	6155.11	438.33	0.29
D100-00-00_0008	5654	0.2PCT_500yr	55389.00	-21.47	18.71		19.68	0.000588	7.91	7195.25	898.46	0.30
D100-00-00_0008	4111	10PCT_10yr	37545.00	-21.35	11.77		12.35	0.000357	6.24	8099.78	887.95	0.23
D100-00-00_0008	4111	2PCT_50yr	44124.00	-21.35	14.34		14.94	0.000335	6.41	9962.99	1128.92	0.22
D100-00-00_0008	4111	1PCT_100yr	47258.00	-21.35	15.50		16.10	0.000323	6.48	10835.15	1215.11	0.22
D100-00-00_0008	4111	0.2PCT_500yr	55389.00	-21.35	18.33		18.95	0.000299	6.67	13084.51	1412.06	0.22
D100-00-00_0008	3429	10PCT_10yr	37545.00	-19.62	11.48		12.09	0.000401	6.25	6147.35	345.05	0.24
D100-00-00_0008	3429	2PCT_50yr	44124.00	-19.62	14.03		14.69	0.000378	6.53	7120.78	415.94	0.24
D100-00-00_0008	3429	1PCT_100yr	47258.00	-19.62	15.18		15.86	0.000368	6.65	7617.78	478.26	0.24
D100-00-00_0008	3429	0.2PCT_500yr	55389.00	-19.62	17.98		18.72	0.000348	6.95	9204.40	1054.47	0.23
D100-00-00_0008	2574	10PCT_10yr	37545.00	-19.41	10.95		11.70	0.000477	6.93	5418.78	437.87	0.26
D100-00-00_0008	2574	2PCT_50yr	44124.00	-19.41	13.48		14.29	0.000533	7.24	6102.36	797.86	0.28
D100-00-00_0008	2574	1PCT_100yr	47258.00	-19.41	14.64		15.48	0.000517	7.34	6450.69	1328.71	0.28
D100-00-00_0008	2574	0.2PCT_500yr	55389.00	-19.41	17.45		18.35	0.000487	7.62	7307.79	1982.32	0.27
D100-00-00_0008	2185	10PCT_10yr	37545.00	-19.41	10.86		11.45	0.000549	6.18	6070.63	383.80	0.27
D100-00-00_0008	2185	2PCT_50yr	44124.00	-19.41	13.42		14.02	0.000526	6.20	7112.86	530.21	0.27
D100-00-00_0008	2185	1PCT_100yr	47258.00	-19.41	14.61		15.20	0.000512	6.18	7649.07	1007.74	0.27
D100-00-00_0008	2185	0.2PCT_500yr	55389.00	-19.41	17.49		18.08	0.000427	6.16	9071.04	1930.93	0.25
D100-00-00_0008	1888	10PCT_10yr	37545.00	-19.76	10.55	-4.82	11.26	0.000552	6.74	5568.91	307.98	0.28
D100-00-00_0008	1888	2PCT_50yr	44124.00	-19.76	13.08	-3.40	13.82	0.000528	6.92	6372.21	327.62	0.28
D100-00-00_0008	1888	1PCT_100yr	47258.00	-19.76	14.24	-2.76	15.00	0.000514	6.99	6758.11	493.21	0.27
D100-00-00_0008	1888	0.2PCT_500yr	55389.00	-19.76	17.09	-1.09	17.88	0.000478	7.16	7738.95	1241.44	0.27
D100-00-00_0008	1871		Bridge									
D100-00-00_0008	1855	10PCT_10yr	37545.00	-19.76	10.26		11.12	0.000522	7.46	5148.90	308.92	0.27
D100-00-00_0008	1855	2PCT_50yr	44124.00	-19.76	12.71		13.67	0.000531	7.88	5940.09	334.51	0.28
D100-00-00_0008	1855	1PCT_100yr	47258.00	-19.76	13.84		14.84	0.000530	8.05	6324.58	343.28	0.28
D100-00-00_0008	1855	0.2PCT_500yr	55389.00	-19.76	16.62		17.71	0.000527	8.43	7313.22	1139.57	0.28
D100-00-00_0008	1410	10PCT_10yr	37545.00	-19.76	9.99	-4.80	10.88	0.000543	7.56	4980.65	240.59	0.28
D100-00-00_0008	1410	2PCT_50yr	44124.00	-19.76	12.42	-3.39	13.42	0.000536	8.02	5620.27	327.67	0.28
D100-00-00_0008	1410	1PCT_100yr	47258.00	-19.76	13.55	-2.76	14.59	0.000529	8.21	6068.85	673.84	0.28
D100-00-00_0008	1410	0.2PCT_500yr	55389.00	-19.76	16.33	-1.24	17.46	0.000510	8.61	7507.23	1575.30	0.28
D100-00-00_0008	1367		Bridge									
D100-00-00_0008	1324	10PCT_10yr	37545.00	-19.76	9.62		10.54	0.000571	7.68	4954.50	300.68	0.29
D100-00-00_0008	1324	2PCT_50yr	44124.00	-19.76	12.07		13.08	0.000573	8.10	5726.53	347.47	0.29
D100-00-00_0008	1324	1PCT_100yr	47258.00	-19.76	13.21		14.26	0.000574	8.27	6111.43	405.17	0.29
D100-00-00_0008	1324	0.2PCT_500yr	55389.00	-19.76	16.01		17.15	0.000575	8.62	7202.43	1365.09	0.30
D100-00-00_0008	760	10PCT_10yr	37545.00	-19.76	9.25	-4.80	10.20	0.000601	7.81	4847.48	272.92	0.29
D100-00-00_0008	760	2PCT_50yr	44124.00	-19.76	11.69	-3.39	12.74	0.000600	8.24	5603.26	330.89	0.30
D100-00-00_0008	760	1PCT_100yr	47258.00	-19.76	12.83	-2.76	13.92	0.000600	8.40	5981.93	377.15	0.30
D100-00-00_0008	760	0.2PCT_500yr	55389.00	-19.76	15.63	-1.24	16.81	0.000600	8.76	6986.61	1320.53	0.30

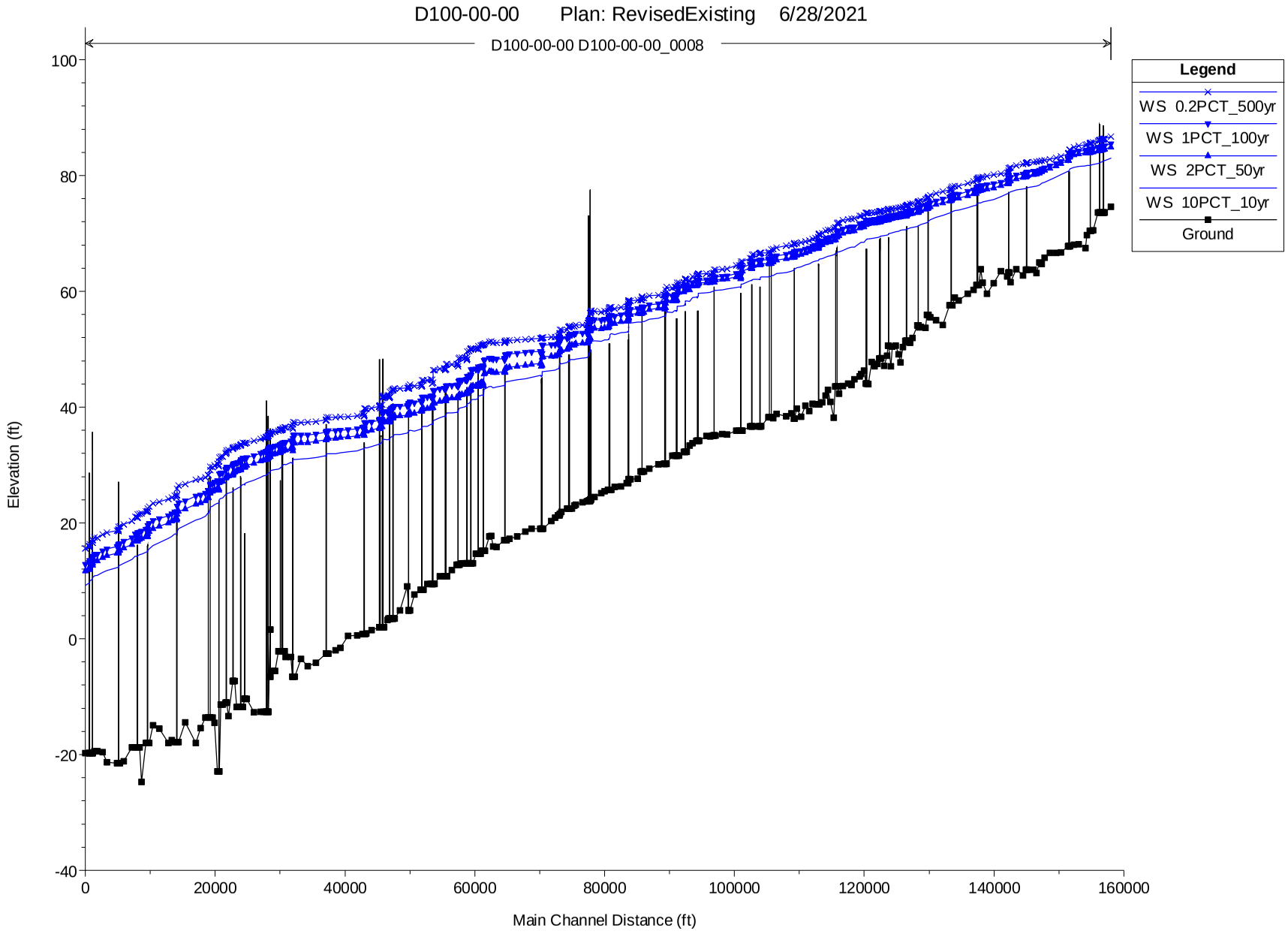
D100-00-00 Plan: RevisedExisting 6/28/2021
D100-00-00 D100-00-00_0008
Legend
WS 0.2PCT_500yr
WS 1PCT_100yr
WS 2PCT_50yr
WS 10PCT_10yr
Ground
Elevation (ft)
Main Channel Distance (ft)
100
80
60
40
20
0
-20
-40
0
20000
40000
60000
80000
100000
120000
140000
160000

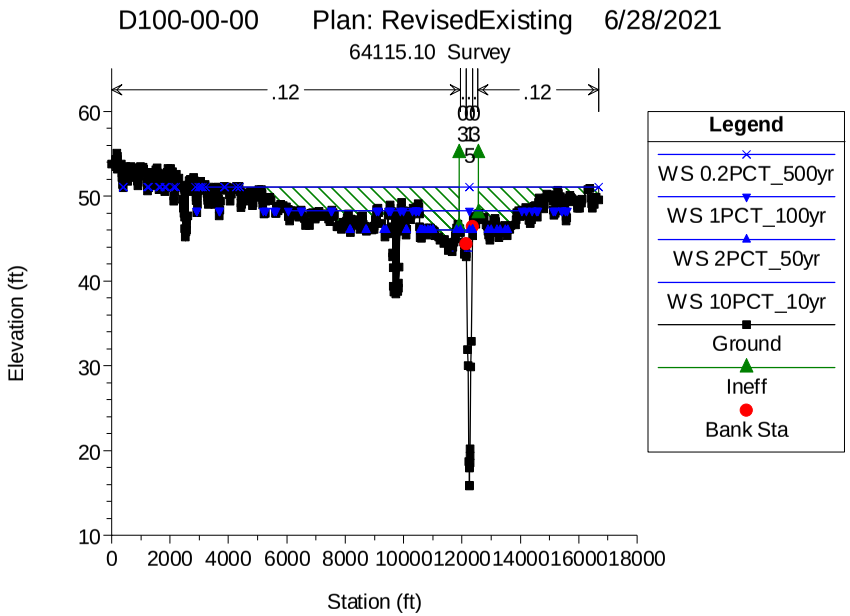
D100-00-00 Plan: RevisedExisting 6/28/2021
64115.10 Survey
.12
.12
Legend
WS 0.2PCT_500yr
WS 1PCT_100yr
WS 2PCT_50yr
WS 10PCT_10yr
Ground
Ineff
Bank Sta
Elevation (ft)
Station (ft)
10
20
30
40
50
60
0
2000
4000
6000
8000
10000
12000
14000
16000
18000

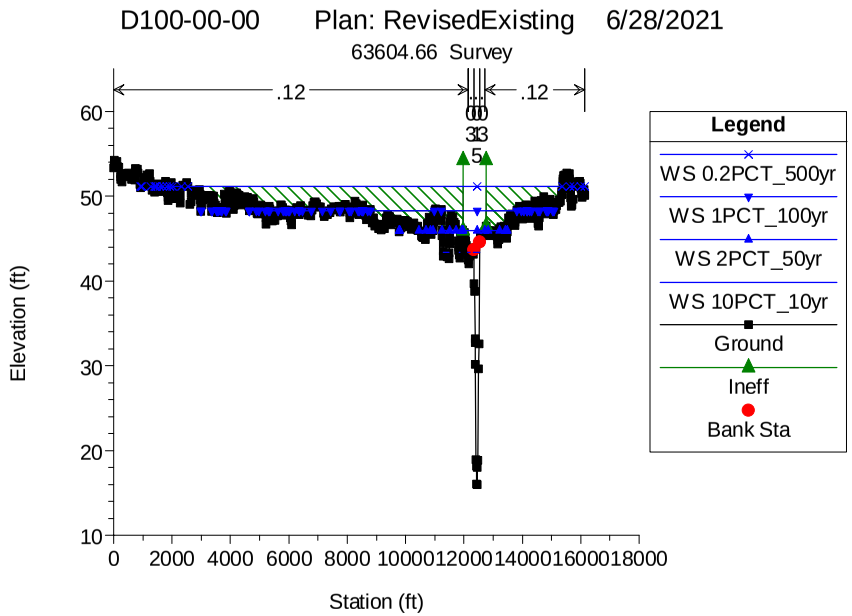
D100-00-00 Plan: RevisedExisting 6/28/2021
63604.66 Survey
.12
.12
Legend
WS 0.2PCT_500yr
WS 1PCT_100yr
WS 2PCT_50yr
WS 10PCT_10yr
Ground
Ineff
Bank Sta
Elevation (ft)
Station (ft)
10
20
30
40
50
60
0
2000
4000
6000
8000
10000
12000
14000
16000
18000

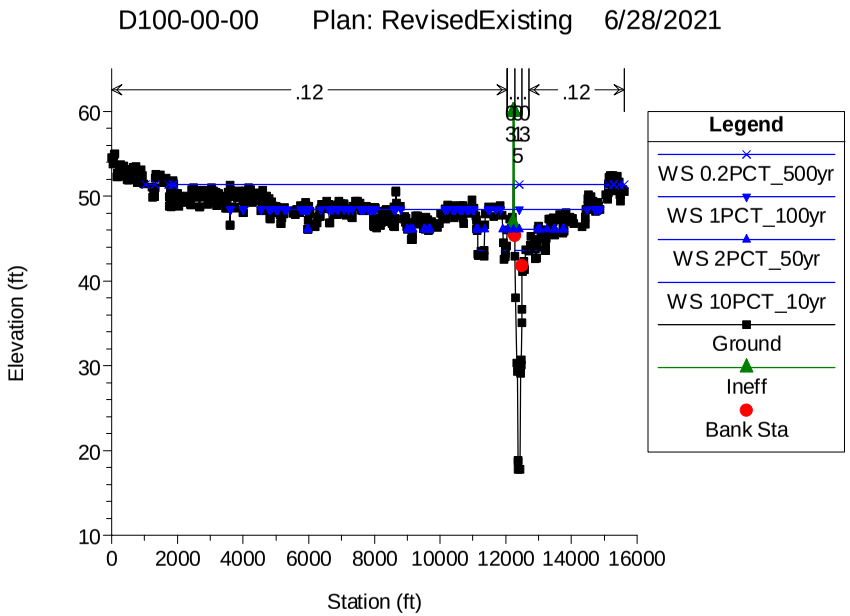
D100-00-00 Plan: RevisedExisting 6/28/2021
.12
.12
Legend
WS 0.2PCT_500yr
WS 1PCT_100yr
WS 2PCT_50yr
WS 10PCT_10yr
Ground
Ineff
Bank Sta
Elevation (ft)
Station (ft)
10
20
30
40
50
60
0
2000
4000
6000
8000
10000
12000
14000
16000

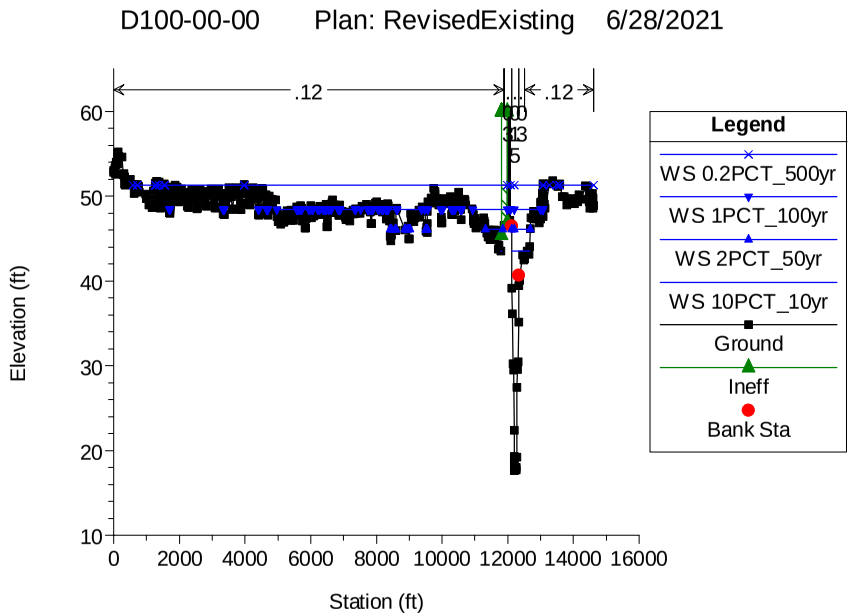
D100-00-00 Plan: RevisedExisting 6/28/2021
.12
.12
Legend
WS 0.2PCT_500yr
WS 1PCT_100yr
WS 2PCT_50yr
WS 10PCT_10yr
Ground
Ineff
Bank Sta
Elevation (ft)
Station (ft)
10
20
30
40
50
60
0
2000
4000
6000
8000
10000
12000
14000
16000

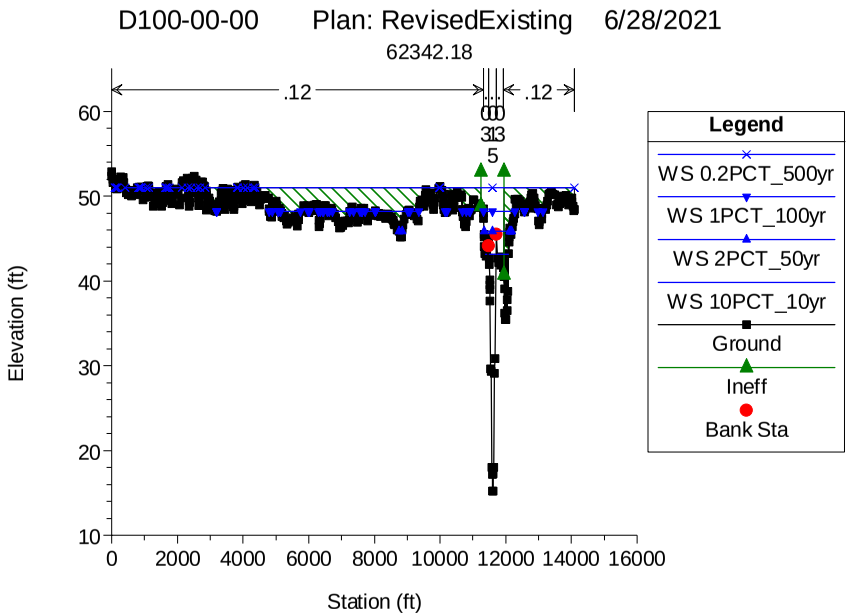
D100-00-00 Plan: RevisedExisting 6/28/2021
62342.18
.12
.12
Elevation (ft)
Station (ft)
Legend
WS 0.2PCT_500yr
WS 1PCT_100yr
WS 2PCT_50yr
WS 10PCT_10yr
Ground
Ineff
Bank Sta

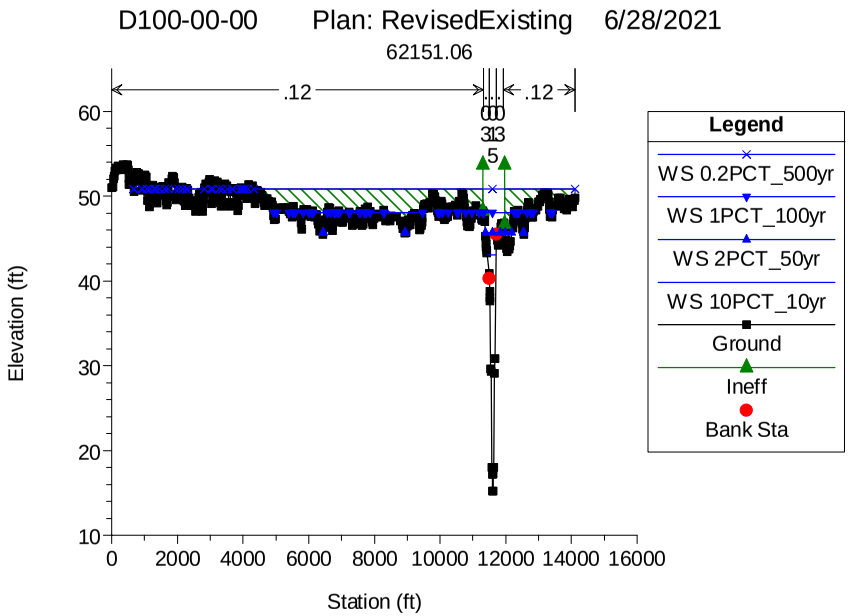
D100-00-00 Plan: RevisedExisting 6/28/2021
62151.06
.12
.12
Elevation (ft)
Station (ft)
Legend
WS 0.2PCT_500yr
WS 1PCT_100yr
WS 2PCT_50yr
WS 10PCT_10yr
Ground
Ineff
Bank Sta

HEC-RAS Plan: Prop River: D100-00-00 Reach: D100-00-00_0008

Reach	River Sta	Profile	Q Total	Min Ch El	W.S. Elev	Crit W.S.	E.G. Elev	E.G. Slope	Vel Chnl	Flow Area	Top Width	Froude # Chl
			(cfs)	(ft)	(ft)	(ft)	(ft)	(ft/ft)	(ft/s)	(sq ft)	(ft)	
D100-00-00_0008	158788	10PCT_10yr	779.00	74.62	83.00		83.10	0.000570	2.57	303.29	71.55	0.22
D100-00-00_0008	158788	2PCT_50yr	1152.00	74.62	84.88		84.98	0.000415	2.56	449.15	83.80	0.20
D100-00-00_0008	158788	1PCT_100yr	1343.00	74.62	85.45		85.57	0.000422	2.69	498.47	87.44	0.20
D100-00-00_0008	158788	0.2PCT_500yr	1871.00	74.62	86.71		86.85	0.000461	3.05	613.37	95.38	0.21
D100-00-00_0008	157812	10PCT_10yr	779.00	73.62	82.58		82.65	0.000366	2.12	366.75	83.12	0.18
D100-00-00_0008	157812	2PCT_50yr	1152.00	73.62	84.58		84.65	0.000259	2.11	546.94	96.87	0.16
D100-00-00_0008	157812	1PCT_100yr	1343.00	73.62	85.15		85.23	0.000267	2.23	603.23	100.81	0.16
D100-00-00_0008	157812	0.2PCT_500yr	1871.00	73.62	86.38		86.48	0.000302	2.56	731.93	108.92	0.17
D100-00-00_0008	157685	10PCT_10yr	779.00	73.62	82.53	78.75	82.60	0.000377	2.15	362.66	82.79	0.18
D100-00-00_0008	157685	2PCT_50yr	1152.00	73.62	84.55	79.35	84.62	0.000263	2.12	543.62	96.64	0.16
D100-00-00_0008	157685	1PCT_100yr	1343.00	73.62	85.12	79.63	85.20	0.000272	2.24	599.65	100.56	0.16
D100-00-00_0008	157685	0.2PCT_500yr	1871.00	73.62	86.34	80.27	86.44	0.000308	2.57	727.52	108.73	0.18
D100-00-00_0008	157635		Bridge									
D100-00-00_0008	157586	10PCT_10yr	779.00	73.62	82.47		82.55	0.000393	2.18	357.70	82.37	0.18
D100-00-00_0008	157586	2PCT_50yr	1152.00	73.62	84.51		84.58	0.000269	2.14	539.39	96.34	0.16
D100-00-00_0008	157586	1PCT_100yr	1343.00	73.62	85.07		85.15	0.000278	2.26	595.04	100.24	0.16
D100-00-00_0008	157586	0.2PCT_500yr	1871.00	73.62	86.29		86.39	0.000316	2.59	721.67	108.87	0.18
D100-00-00_0008	157460	10PCT_10yr	779.00	73.62	82.42		82.50	0.000406	2.20	353.37	82.01	0.19
D100-00-00_0008	157460	2PCT_50yr	1152.00	73.62	84.47		84.54	0.000274	2.15	535.99	96.09	0.16
D100-00-00_0008	157460	1PCT_100yr	1343.00	73.62	85.04		85.12	0.000283	2.27	591.38	99.99	0.16
D100-00-00_0008	157460	0.2PCT_500yr	1871.00	73.62	86.24		86.35	0.000320	2.61	717.11	108.12	0.18
D100-00-00_0008	157290	10PCT_10yr	779.00	73.62	82.35		82.43	0.000420	2.25	346.76	80.07	0.19
D100-00-00_0008	157290	2PCT_50yr	1152.00	73.62	84.42		84.50	0.000281	2.19	526.12	93.28	0.16
D100-00-00_0008	157290	1PCT_100yr	1343.00	73.62	84.98		85.07	0.000291	2.32	579.65	96.99	0.17
D100-00-00_0008	157290	0.2PCT_500yr	1871.00	73.62	86.18		86.29	0.000334	2.67	700.63	104.89	0.18
D100-00-00_0008	157089	10PCT_10yr	779.00	73.62	82.26	78.75	82.34	0.000454	2.29	339.90	80.88	0.20
D100-00-00_0008	157089	2PCT_50yr	1152.00	73.62	84.36	79.35	84.44	0.000289	2.19	525.69	95.36	0.16
D100-00-00_0008	157089	1PCT_100yr	1343.00	73.62	84.92	79.64	85.01	0.000298	2.31	580.28	99.22	0.17
D100-00-00_0008	157089	0.2PCT_500yr	1871.00	73.62	86.12	80.27	86.23	0.000339	2.66	703.30	107.44	0.18
D100-00-00_0008	157029		Bridge									
D100-00-00_0008	156970	10PCT_10yr	779.00	73.62	82.16		82.25	0.000484	2.34	332.35	80.23	0.20
D100-00-00_0008	156970	2PCT_50yr	1152.00	73.62	84.30		84.38	0.000298	2.22	519.89	94.94	0.17
D100-00-00_0008	156970	1PCT_100yr	1343.00	73.62	84.86		84.95	0.000307	2.34	573.97	98.78	0.17
D100-00-00_0008	156970	0.2PCT_500yr	1871.00	73.62	86.04		86.15	0.000350	2.69	695.29	106.93	0.19
D100-00-00_0008	156774	10PCT_10yr	779.00	73.62	82.06		82.15	0.000521	2.40	324.03	79.52	0.21
D100-00-00_0008	156774	2PCT_50yr	1152.00	73.62	84.24		84.32	0.000308	2.24	514.06	94.51	0.17
D100-00-00_0008	156774	1PCT_100yr	1343.00	73.62	84.80		84.88	0.000317	2.37	567.72	98.34	0.17
D100-00-00_0008	156774	0.2PCT_500yr	1871.00	73.62	85.97		86.08	0.000361	2.72	687.54	106.43	0.19
D100-00-00_0008	156015	10PCT_10yr	1018.00	70.50	81.88		81.93	0.000178	1.83	556.28	91.73	0.13
D100-00-00_0008	156015	2PCT_50yr	1507.00	70.50	84.10		84.16	0.000158	1.94	776.20	107.47	0.13
D100-00-00_0008	156015	1PCT_100yr	1757.00	70.50	84.64		84.71	0.000179	2.10	835.76	122.49	0.14
D100-00-00_0008	156015	0.2PCT_500yr	2444.00	70.50	85.76		85.86	0.000239	2.52	968.47	202.38	0.16
D100-00-00_0008	155693	10PCT_10yr	1018.00	70.47	81.82		81.88	0.000189	1.94	524.96	81.58	0.13
D100-00-00_0008	155693	2PCT_50yr	1507.00	70.47	84.03		84.10	0.000177	2.09	719.83	94.99	0.13
D100-00-00_0008	155693	1PCT_100yr	1757.00	70.47	84.57		84.65	0.000201	2.28	771.33	98.83	0.14
D100-00-00_0008	155693	0.2PCT_500yr	2444.00	70.47	85.66		85.78	0.000273	2.77	883.90	528.55	0.17
D100-00-00_0008	155602	10PCT_10yr	1018.00	70.47	81.80	75.37	81.86	0.000190	1.94	523.51	81.48	0.14
D100-00-00_0008	155602	2PCT_50yr	1507.00	70.47	84.02	76.17	84.09	0.000178	2.10	718.25	94.87	0.13
D100-00-00_0008	155602	1PCT_100yr	1757.00	70.47	84.55	76.54	84.63	0.000202	2.28	769.46	311.44	0.14
D100-00-00_0008	155602	0.2PCT_500yr	2444.00	70.47	85.63	77.42	85.75	0.000276	2.77	881.11	818.65	0.17
D100-00-00_0008	155578		Bridge									
D100-00-00_0008	155557	10PCT_10yr	1018.00	70.47	81.77		81.83	0.000193	1.95	521.43	81.34	0.14
D100-00-00_0008	155557	2PCT_50yr	1507.00	70.47	84.00		84.07	0.000179	2.10	716.48	94.73	0.13
D100-00-00_0008	155557	1PCT_100yr	1757.00	70.47	84.50		84.58	0.000206	2.30	764.89	177.52	0.15
D100-00-00_0008	155557	0.2PCT_500yr	2444.00	70.47	85.52		85.64	0.000286	2.81	868.48	965.15	0.17
D100-00-00_0008	155467	10PCT_10yr	1018.00	70.47	81.76		81.82	0.000194	1.96	520.00	81.24	0.14
D100-00-00_0008	155467	2PCT_50yr	1507.00	70.47	83.98		84.05	0.000180	2.11	714.93	94.61	0.14
D100-00-00_0008	155467	1PCT_100yr	1757.00	70.47	84.48		84.56	0.000207	2.30	763.03	184.92	0.15
D100-00-00_0008	155467	0.2PCT_500yr	2444.00	70.47	85.49		85.61	0.000288	2.82	865.68	308.76	0.17
D100-00-00_0008	155083	10PCT_10yr	1018.00	69.68	81.71		81.75	0.000136	1.66	612.86	95.98	0.12
D100-00-00_0008	155083	2PCT_50yr	1507.00	69.68	83.94		83.99	0.000130	1.77	850.15	147.83	0.12
D100-00-00_0008	155083	1PCT_100yr	1757.00	69.68	84.43		84.49	0.000147	1.93	909.17	400.48	0.12
D100-00-00_0008	155083	0.2PCT_500yr	2444.00	69.68	85.43		85.51	0.000193	2.37	1054.45	988.43	0.14

HEC-RAS Plan: Prop River: D100-00-00 Reach: D100-00-00_0008 (Continued)

Reach	River Sta	Profile	Q Total	Min Ch El	W.S. Elev	Crit W.S.	E.G. Elev	E.G. Slope	Vel Chnl	Flow Area	Top Width	Froude # Chl
			(cfs)	(ft)	(ft)	(ft)	(ft)	(ft/ft)	(ft/s)	(sq ft)	(ft)	
D100-00-00_0008	154854	10PCT_10yr	1533.00	67.44	81.64		81.71	0.000206	2.13	720.93	107.56	0.14
D100-00-00_0008	154854	2PCT_50yr	2277.00	67.44	83.86		83.94	0.000206	2.33	1012.62	443.81	0.15
D100-00-00_0008	154854	1PCT_100yr	2659.00	67.44	84.34		84.44	0.000239	2.55	1097.29	752.19	0.16
D100-00-00_0008	154854	0.2PCT_500yr	3684.00	67.44	85.29		85.45	0.000334	3.13	1287.81	2426.17	0.19
D100-00-00_0008	153809	10PCT_10yr	1533.00	68.16	81.54		81.57	0.000076	1.49	1029.66	127.82	0.09
D100-00-00_0008	153809	2PCT_50yr	2277.00	68.16	83.76		83.81	0.000078	1.74	1387.08	1975.01	0.09
D100-00-00_0008	153809	1PCT_100yr	2659.00	68.16	84.22		84.28	0.000091	1.94	1519.73	2243.81	0.10
D100-00-00_0008	153809	0.2PCT_500yr	3684.00	68.16	85.13		85.22	0.000130	2.44	1839.86	3152.87	0.13
D100-00-00_0008	153068	10PCT_10yr	2439.00	68.05	81.39		81.47	0.000200	2.35	1038.06	128.93	0.15
D100-00-00_0008	153068	2PCT_50yr	3636.00	68.05	83.59		83.70	0.000225	2.64	1675.04	1965.39	0.16
D100-00-00_0008	153068	1PCT_100yr	4250.00	68.05	84.03		84.15	0.000264	2.88	1988.74	2781.98	0.17
D100-00-00_0008	153068	0.2PCT_500yr	5865.00	68.05	84.88		85.05	0.000340	3.43	2657.19	3386.67	0.20
D100-00-00_0008	152474	10PCT_10yr	2439.00	67.80	81.14		81.29	0.000463	3.17	768.39	236.25	0.22
D100-00-00_0008	152474	2PCT_50yr	3636.00	67.80	83.32		83.50	0.000520	3.41	1197.82	1890.12	0.23
D100-00-00_0008	152474	1PCT_100yr	4250.00	67.80	83.70		83.92	0.000613	3.74	1326.75	2233.99	0.25
D100-00-00_0008	152474	0.2PCT_500yr	5865.00	67.80	84.42		84.73	0.000825	4.59	1703.14	3036.90	0.30
D100-00-00_0008	152382	10PCT_10yr	2439.00	67.80	81.09	75.04	81.25	0.000472	3.20	763.11	371.55	0.22
D100-00-00_0008	152382	2PCT_50yr	3636.00	67.80	83.30	76.29	83.44	0.000384	3.17	1967.32	2462.93	0.20
D100-00-00_0008	152382	1PCT_100yr	4250.00	67.80	83.69	76.83	83.84	0.000399	3.35	2461.43	2669.05	0.21
D100-00-00_0008	152382	0.2PCT_500yr	5865.00	67.80	84.44	78.05	84.61	0.000447	3.76	3477.63	2938.84	0.22
D100-00-00_0008	152299		Bridge									
D100-00-00_0008	152189	10PCT_10yr	2439.00	67.80	80.75		80.93	0.000543	3.37	724.47	163.60	0.23
D100-00-00_0008	152189	2PCT_50yr	3636.00	67.80	82.62		82.82	0.000500	3.68	1395.74	1714.07	0.23
D100-00-00_0008	152189	1PCT_100yr	4250.00	67.80	82.93		83.17	0.000570	4.04	1682.11	2198.68	0.25
D100-00-00_0008	152189	0.2PCT_500yr	5865.00	67.80	83.85		84.10	0.000588	4.40	2858.21	3353.74	0.26
D100-00-00_0008	152131	10PCT_10yr	2439.00	67.80	80.72		80.89	0.000551	3.38	720.79	132.32	0.24
D100-00-00_0008	152131	2PCT_50yr	3636.00	67.80	82.57		82.78	0.000533	3.78	1202.89	1011.33	0.24
D100-00-00_0008	152131	1PCT_100yr	4250.00	67.80	82.86		83.12	0.000627	4.20	1426.25	1521.42	0.26
D100-00-00_0008	152131	0.2PCT_500yr	5865.00	67.80	83.74		84.04	0.000690	4.72	2486.69	2968.58	0.28
D100-00-00_0008	151046	10PCT_10yr	2832.00	66.74	80.18		80.36	0.000450	3.36	853.10	181.13	0.22
D100-00-00_0008	151046	2PCT_50yr	4199.00	66.74	82.09		82.26	0.000423	3.45	2207.88	2493.04	0.21
D100-00-00_0008	151046	1PCT_100yr	4529.00	66.74	82.40		82.55	0.000407	3.43	2655.49	3000.36	0.21
D100-00-00_0008	151046	0.2PCT_500yr	5807.00	66.74	83.35		83.48	0.000347	3.39	4522.59	4640.42	0.20
D100-00-00_0008	150303	10PCT_10yr	2832.00	66.66	79.76		79.98	0.000564	3.77	752.03	99.22	0.24
D100-00-00_0008	150303	2PCT_50yr	4199.00	66.66	81.69		81.91	0.000503	3.96	2217.95	2506.82	0.23
D100-00-00_0008	150303	1PCT_100yr	4529.00	66.66	82.04		82.23	0.000443	3.79	2909.15	3016.00	0.22
D100-00-00_0008	150303	0.2PCT_500yr	5807.00	66.66	83.11		83.22	0.000302	3.35	5264.42	4194.76	0.19
D100-00-00_0008	149340	10PCT_10yr	2832.00	66.67	79.25		79.44	0.000541	3.46	819.44	121.93	0.24
D100-00-00_0008	149340	2PCT_50yr	4199.00	66.67	81.23		81.42	0.000491	3.65	1850.27	1445.27	0.23
D100-00-00_0008	149340	1PCT_100yr	4529.00	66.67	81.63		81.81	0.000430	3.53	2447.11	1852.33	0.22
D100-00-00_0008	149340	0.2PCT_500yr	5807.00	66.67	82.83		82.94	0.000286	3.15	4829.46	4333.37	0.18
D100-00-00_0008	148557	10PCT_10yr	2832.00	65.79	78.84		79.03	0.000512	3.49	815.20	152.65	0.23
D100-00-00_0008	148557	2PCT_50yr	4199.00	65.79	80.89		81.08	0.000416	3.63	2015.37	1663.64	0.21
D100-00-00_0008	148557	1PCT_100yr	4529.00	65.79	81.34		81.51	0.000375	3.57	2852.95	2795.27	0.21
D100-00-00_0008	148557	0.2PCT_500yr	5807.00	65.79	82.69		82.77	0.000208	2.90	6323.44	4577.35	0.16
D100-00-00_0008	148121	10PCT_10yr	2832.00	64.70	78.64		78.82	0.000429	3.44	838.94	162.52	0.21
D100-00-00_0008	148121	2PCT_50yr	4199.00	64.70	80.70		80.90	0.000382	3.77	1873.22	1094.87	0.21
D100-00-00_0008	148121	1PCT_100yr	4529.00	64.70	81.17		81.35	0.000345	3.69	2502.51	1973.85	0.20
D100-00-00_0008	148121	0.2PCT_500yr	5807.00	64.70	82.58		82.68	0.000211	3.14	6095.92	3517.28	0.16
D100-00-00_0008	147722	10PCT_10yr	2832.00	64.95	78.35		78.60	0.000678	3.99	709.23	98.35	0.26
D100-00-00_0008	147722	2PCT_50yr	4199.00	64.95	80.42		80.71	0.000623	4.36	1374.77	1111.85	0.26
D100-00-00_0008	147722	1PCT_100yr	4529.00	64.95	80.93		81.18	0.000545	4.21	2027.16	1798.03	0.24
D100-00-00_0008	147722	0.2PCT_500yr	5807.00	64.95	82.47		82.58	0.000278	3.34	5760.85	3901.00	0.18
D100-00-00_0008	147287	10PCT_10yr	2832.00	63.18	78.15		78.34	0.000457	3.51	807.04	100.65	0.22
D100-00-00_0008	147287	2PCT_50yr	4199.00	63.18	80.22		80.45	0.000496	3.95	1566.06	2493.95	0.23
D100-00-00_0008	147287	1PCT_100yr	4529.00	63.18	80.76		80.95	0.000408	3.72	2435.94	2966.04	0.21
D100-00-00_0008	147287	0.2PCT_500yr	5807.00	63.18	82.37		82.46	0.000209	2.96	5605.15	3239.98	0.16
D100-00-00_0008	146862	10PCT_10yr	2832.00	63.71	78.12		78.20	0.000160	2.31	1225.64	374.54	0.13
D100-00-00_0008	146862	2PCT_50yr	4199.00	63.71	80.20		80.30	0.000162	2.60	2677.56	2808.97	0.14
D100-00-00_0008	146862	1PCT_100yr	4529.00	63.71	80.74		80.83	0.000143	2.52	3583.51	3107.35	0.13
D100-00-00_0008	146862	0.2PCT_500yr	5807.00	63.71	82.34		82.40	0.000098	2.28	6647.87	3488.66	0.11
D100-00-00_0008	145942	10PCT_10yr	2832.00	63.70	77.89		78.02	0.000262	2.82	1003.64	221.61	0.17
D100-00-00_0008	145942	2PCT_50yr	4199.00	63.70	79.99		80.12	0.000238	3.00	2543.84	2662.59	0.17
D100-00-00_0008	145942	1PCT_100yr	4529.00	63.70	80.56		80.67	0.000202	2.87	3285.01	3155.54	0.15
D100-00-00_0008	145942	0.2PCT_500yr	5807.00	63.70	82.22		82.29	0.000128	2.51	5901.41	3433.27	0.13

HEC-RAS Plan: Prop River: D100-00-00 Reach: D100-00-00_0008 (Continued)

Reach	River Sta	Profile	Q Total	Min Ch El	W.S. Elev	Crit W.S.	E.G. Elev	E.G. Slope	Vel Chnl	Flow Area	Top Width	Froude # Chl
			(cfs)	(ft)	(ft)	(ft)	(ft)	(ft/ft)	(ft/s)	(sq ft)	(ft)	
D100-00-00_0008	145831	10PCT_10yr	2832.00	63.70	77.86	69.52	77.98	0.000285	2.81	1069.44	1581.29	0.17
D100-00-00_0008	145831	2PCT_50yr	4199.00	63.70	79.98	70.81	80.07	0.000247	2.61	3257.63	3204.75	0.16
D100-00-00_0008	145831	1PCT_100yr	4529.00	63.70	80.56	71.07	80.63	0.000191	2.41	4081.35	3252.56	0.15
D100-00-00_0008	145831	0.2PCT_500yr	5807.00	63.70	82.22	72.06	82.27	0.000113	2.09	6461.06	3402.76	0.12
D100-00-00_0008	145781		Bridge									
D100-00-00_0008	145732	10PCT_10yr	2832.00	63.70	77.81		77.93	0.000267	2.84	1033.55	396.94	0.17
D100-00-00_0008	145732	2PCT_50yr	4199.00	63.70	79.84		79.96	0.000242	3.00	2656.38	3126.85	0.17
D100-00-00_0008	145732	1PCT_100yr	4529.00	63.70	80.43		80.53	0.000198	2.82	3410.96	3315.19	0.15
D100-00-00_0008	145732	0.2PCT_500yr	5807.00	63.70	82.13		82.20	0.000129	2.51	5570.16	3421.55	0.13
D100-00-00_0008	145620	10PCT_10yr	2832.00	63.70	77.78		77.90	0.000268	2.85	1054.65	1106.24	0.17
D100-00-00_0008	145620	2PCT_50yr	4199.00	63.70	79.77		79.92	0.000282	3.22	1826.84	2865.50	0.18
D100-00-00_0008	145620	1PCT_100yr	4529.00	63.70	80.35		80.50	0.000255	3.18	2201.42	3023.35	0.17
D100-00-00_0008	145620	0.2PCT_500yr	5807.00	63.70	82.04		82.16	0.000199	3.10	3658.38	3443.89	0.16
D100-00-00_0008	145210	10PCT_10yr	2832.00	62.73	77.71		77.80	0.000198	2.29	1234.24	757.11	0.14
D100-00-00_0008	145210	2PCT_50yr	4199.00	62.73	79.70		79.81	0.000206	2.68	1735.83	3327.27	0.15
D100-00-00_0008	145210	1PCT_100yr	4529.00	62.73	80.29		80.40	0.000191	2.68	2019.99	3504.49	0.15
D100-00-00_0008	145210	0.2PCT_500yr	5807.00	62.73	81.97		82.09	0.000169	2.80	2841.43	3545.58	0.14
D100-00-00_0008	144189	10PCT_10yr	2832.00	63.79	77.49		77.59	0.000199	2.50	1157.63	446.60	0.15
D100-00-00_0008	144189	2PCT_50yr	4199.00	63.79	79.46		79.59	0.000218	2.99	1555.62	1962.68	0.16
D100-00-00_0008	144189	1PCT_100yr	4529.00	63.79	80.05		80.19	0.000211	3.05	1704.83	2521.08	0.16
D100-00-00_0008	144189	0.2PCT_500yr	5807.00	63.79	81.73		81.89	0.000204	3.30	2248.18	2877.09	0.16
D100-00-00_0008	143314	10PCT_10yr	2832.00	61.60	77.14		77.32	0.000512	3.38	838.90	584.12	0.23
D100-00-00_0008	143314	2PCT_50yr	4199.00	61.60	79.08		79.31	0.000498	3.88	1170.46	3029.69	0.23
D100-00-00_0008	143314	1PCT_100yr	4529.00	61.60	79.68		79.92	0.000458	3.89	1308.32	3172.88	0.22
D100-00-00_0008	143314	0.2PCT_500yr	5807.00	61.60	81.38		81.64	0.000415	4.14	1716.62	3224.40	0.22
D100-00-00_0008	143131	10PCT_10yr	2832.00	63.24	77.06		77.22	0.000490	3.25	871.99	438.89	0.22
D100-00-00_0008	143131	2PCT_50yr	4199.00	63.24	79.01		79.21	0.000476	3.65	1269.15	3007.13	0.23
D100-00-00_0008	143131	1PCT_100yr	4529.00	63.24	79.62		79.83	0.000426	3.63	1444.06	3322.74	0.22
D100-00-00_0008	143131	0.2PCT_500yr	5807.00	63.24	81.34		81.55	0.000366	3.79	1931.99	3376.88	0.21
D100-00-00_0008	142998	10PCT_10yr	2832.00	63.24	76.98	70.01	77.16	0.000465	3.34	856.51	919.36	0.22
D100-00-00_0008	142998	2PCT_50yr	4199.00	63.24	78.92	71.38	79.14	0.000519	3.79	1211.71	3225.17	0.24
D100-00-00_0008	142998	1PCT_100yr	4529.00	63.24	79.54	71.68	79.76	0.000465	3.77	1356.18	3398.04	0.23
D100-00-00_0008	142998	0.2PCT_500yr	5807.00	63.24	81.26	72.75	81.49	0.000404	3.96	1751.76	3468.03	0.22
D100-00-00_0008	142979		Bridge									
D100-00-00_0008	142960	10PCT_10yr	2832.00	63.24	76.93		77.11	0.000460	3.38	838.32	1030.51	0.22
D100-00-00_0008	142960	2PCT_50yr	4199.00	63.24	78.64		78.90	0.000576	4.02	1046.66	3019.07	0.25
D100-00-00_0008	142960	1PCT_100yr	4529.00	63.24	79.19		79.45	0.000559	4.05	1140.01	3277.07	0.25
D100-00-00_0008	142960	0.2PCT_500yr	5807.00	63.24	80.57		80.87	0.000544	4.43	1451.31	3423.00	0.25
D100-00-00_0008	142768	10PCT_10yr	2832.00	62.59	76.85		77.02	0.000442	3.22	887.44	622.82	0.21
D100-00-00_0008	142768	2PCT_50yr	4199.00	62.59	78.56		78.78	0.000467	3.80	1317.00	2954.22	0.23
D100-00-00_0008	142768	1PCT_100yr	4529.00	62.59	79.12		79.34	0.000430	3.80	1539.19	3347.44	0.22
D100-00-00_0008	142768	0.2PCT_500yr	5807.00	62.59	80.51		80.75	0.000411	4.07	2096.51	3724.48	0.22
D100-00-00_0008	141778	10PCT_10yr	2821.00	63.46	76.35		76.53	0.000540	3.37	838.74	742.92	0.23
D100-00-00_0008	141778	2PCT_50yr	3821.00	63.46	78.23		78.36	0.000357	3.06	2640.30	3473.94	0.19
D100-00-00_0008	141778	1PCT_100yr	4171.00	63.46	78.86		78.97	0.000286	2.88	3409.00	3760.24	0.18
D100-00-00_0008	141778	0.2PCT_500yr	5486.00	63.46	80.35		80.43	0.000213	2.77	5225.27	3849.68	0.16
D100-00-00_0008	140678	10PCT_10yr	2821.00	61.41	75.83		76.00	0.000436	3.25	871.45	586.86	0.21
D100-00-00_0008	140678	2PCT_50yr	3821.00	61.41	77.88		78.02	0.000291	3.07	2510.26	3203.80	0.18
D100-00-00_0008	140678	1PCT_100yr	4171.00	61.41	78.59		78.70	0.000236	2.91	3269.80	3381.84	0.16
D100-00-00_0008	140678	0.2PCT_500yr	5486.00	61.41	80.14		80.23	0.000191	2.89	4945.56	3665.60	0.15
D100-00-00_0008	139663	10PCT_10yr	2821.00	59.55	75.62		75.71	0.000175	2.34	1206.16	315.01	0.14
D100-00-00_0008	139663	2PCT_50yr	3821.00	59.55	77.69		77.79	0.000162	2.55	1732.72	2801.28	0.14
D100-00-00_0008	139663	1PCT_100yr	4171.00	59.55	78.41		78.51	0.000151	2.57	2230.74	3240.94	0.13
D100-00-00_0008	139663	0.2PCT_500yr	5486.00	59.55	79.95		80.06	0.000152	2.80	3375.85	3618.36	0.14
D100-00-00_0008	138994	10PCT_10yr	2821.00	61.47	75.43		75.56	0.000275	2.86	992.57	497.13	0.17
D100-00-00_0008	138994	2PCT_50yr	3821.00	61.47	77.51		77.66	0.000239	3.06	1524.85	6088.39	0.17
D100-00-00_0008	138994	1PCT_100yr	4171.00	61.47	78.24		78.38	0.000221	3.07	1813.45	6899.35	0.16
D100-00-00_0008	138994	0.2PCT_500yr	5486.00	61.47	79.77		79.93	0.000231	3.42	2462.17	7599.76	0.17
D100-00-00_0008	138693	10PCT_10yr	2821.00	63.82	75.30		75.45	0.000457	3.11	905.77	629.44	0.22
D100-00-00_0008	138693	2PCT_50yr	3821.00	63.82	77.43		77.57	0.000381	3.03	1372.55	6887.21	0.20
D100-00-00_0008	138693	1PCT_100yr	4171.00	63.82	78.17		78.30	0.000322	2.98	1573.57	7490.14	0.19
D100-00-00_0008	138693	0.2PCT_500yr	5486.00	63.82	79.70		79.85	0.000297	3.23	2032.03	7614.16	0.19
D100-00-00_0008	138375	10PCT_10yr	2821.00	61.10	75.25		75.34	0.000192	2.43	1159.64	1629.07	0.15

HEC-RAS Plan: Prop River: D100-00-00 Reach: D100-00-00_0008 (Continued)

Reach	River Sta	Profile	Q Total	Min Ch El	W.S. Elev	Crit W.S.	E.G. Elev	E.G. Slope	Vel Chnl	Flow Area	Top Width	Froude # Chl
			(cfs)	(ft)	(ft)	(ft)	(ft)	(ft/ft)	(ft/s)	(sq ft)	(ft)	
D100-00-00_0008	138375	2PCT_50yr	3821.00	61.10	77.37		77.48	0.000183	2.57	1610.58	6638.95	0.15
D100-00-00_0008	138375	1PCT_100yr	4171.00	61.10	78.12		78.22	0.000166	2.58	1858.91	7444.32	0.14
D100-00-00_0008	138375	0.2PCT_500yr	5486.00	61.10	79.65		79.77	0.000171	2.87	2368.78	7531.88	0.15
D100-00-00_0008	138243	10PCT_10yr	2821.00	61.10	75.22	66.42	75.32	0.000183	2.44	1154.75	1293.73	0.14
D100-00-00_0008	138243	2PCT_50yr	3821.00	61.10	77.34	67.30	77.45	0.000197	2.65	1441.64	6558.99	0.15
D100-00-00_0008	138243	1PCT_100yr	4171.00	61.10	78.08	67.57	78.19	0.000194	2.68	1557.57	6975.37	0.15
D100-00-00_0008	138243	0.2PCT_500yr	5486.00	61.10	79.60	68.52	79.74	0.000205	3.03	1985.81	7323.89	0.16
D100-00-00_0008	138189		Bridge									
D100-00-00_0008	138115	10PCT_10yr	2821.00	61.10	75.18		75.27	0.000186	2.45	1149.21	765.81	0.14
D100-00-00_0008	138115	2PCT_50yr	3821.00	61.10	77.24		77.35	0.000180	2.69	1437.62	5689.65	0.15
D100-00-00_0008	138115	1PCT_100yr	4171.00	61.10	77.95		78.07	0.000171	2.74	1608.00	6599.03	0.14
D100-00-00_0008	138115	0.2PCT_500yr	5486.00	61.10	79.34		79.49	0.000192	3.13	2114.71	7207.51	0.15
D100-00-00_0008	138012	10PCT_10yr	4910.00	61.10	74.87		75.17	0.000619	4.42	1110.03	232.02	0.26
D100-00-00_0008	138012	2PCT_50yr	6379.00	61.10	76.92		77.25	0.000626	4.61	1402.58	3486.61	0.27
D100-00-00_0008	138012	1PCT_100yr	6957.00	61.10	77.63		77.97	0.000633	4.64	1564.63	4257.27	0.27
D100-00-00_0008	138012	0.2PCT_500yr	8385.00	61.10	79.06		79.40	0.000566	4.74	2029.60	7021.61	0.26
D100-00-00_0008	137572	10PCT_10yr	4910.00	60.26	74.78		74.95	0.000303	3.30	1489.60	162.26	0.19
D100-00-00_0008	137572	2PCT_50yr	6379.00	60.26	76.84		77.03	0.000290	3.50	1843.59	3824.67	0.19
D100-00-00_0008	137572	1PCT_100yr	6957.00	60.26	77.55		77.75	0.000281	3.58	2015.93	3995.03	0.18
D100-00-00_0008	137572	0.2PCT_500yr	8385.00	60.26	78.98		79.20	0.000272	3.80	2413.49	4816.54	0.19
D100-00-00_0008	136680	10PCT_10yr	4910.00	59.59	74.47		74.66	0.000333	3.53	1392.43	138.42	0.20
D100-00-00_0008	136680	2PCT_50yr	6379.00	59.59	76.52		76.74	0.000343	3.77	1693.37	221.77	0.20
D100-00-00_0008	136680	1PCT_100yr	6957.00	59.59	77.23		77.46	0.000356	3.85	1807.40	514.22	0.21
D100-00-00_0008	136680	0.2PCT_500yr	8385.00	59.59	78.66		78.92	0.000351	4.08	2108.53	2280.15	0.21
D100-00-00_0008	135282	10PCT_10yr	5293.00	58.44	74.00		74.20	0.000330	3.58	1480.24	142.99	0.20
D100-00-00_0008	135282	2PCT_50yr	6527.00	58.44	76.09		76.29	0.000297	3.64	1791.91	575.19	0.19
D100-00-00_0008	135282	1PCT_100yr	7133.00	58.44	76.77		76.99	0.000318	3.75	1901.56	747.60	0.20
D100-00-00_0008	135282	0.2PCT_500yr	8564.00	58.44	78.19		78.44	0.000333	3.96	2360.58	5401.66	0.20
D100-00-00_0008	134682	10PCT_10yr	5293.00	58.88	73.96		74.03	0.000154	2.37	3473.78	2063.90	0.13
D100-00-00_0008	134682	2PCT_50yr	6527.00	58.88	76.08		76.14	0.000128	2.35	4562.17	3152.84	0.12
D100-00-00_0008	134682	1PCT_100yr	7133.00	58.88	76.77		76.83	0.000122	2.36	4964.38	4283.58	0.12
D100-00-00_0008	134682	0.2PCT_500yr	8564.00	58.88	78.21		78.28	0.000110	2.44	5835.21	4986.97	0.12
D100-00-00_0008	134321	10PCT_10yr	5293.00	57.63	73.78		73.94	0.000294	3.36	2157.15	2040.77	0.19
D100-00-00_0008	134321	2PCT_50yr	6527.00	57.63	75.95		76.07	0.000230	3.09	3235.57	2864.44	0.17
D100-00-00_0008	134321	1PCT_100yr	7133.00	57.63	76.64		76.77	0.000219	3.09	3653.08	3598.44	0.16
D100-00-00_0008	134321	0.2PCT_500yr	8564.00	57.63	78.11		78.22	0.000199	3.05	4541.40	4226.16	0.16
D100-00-00_0008	134169	10PCT_10yr	5293.00	57.63	73.67	64.58	73.88	0.000349	3.65	1449.46	142.06	0.20
D100-00-00_0008	134169	2PCT_50yr	6527.00	57.63	75.79	65.42	76.01	0.000322	3.69	1807.60	1229.04	0.20
D100-00-00_0008	134169	1PCT_100yr	7133.00	57.63	76.49	65.80	76.70	0.000318	3.74	2231.00	3128.63	0.20
D100-00-00_0008	134169	0.2PCT_500yr	8564.00	57.63	77.96	66.63	78.16	0.000294	3.73	3276.21	5700.75	0.19
D100-00-00_0008	134151		Bridge									
D100-00-00_0008	134134	10PCT_10yr	5293.00	57.63	73.62		73.83	0.000354	3.67	1441.77	141.72	0.20
D100-00-00_0008	134134	2PCT_50yr	6527.00	57.63	75.70		75.92	0.000333	3.71	1848.29	2775.44	0.20
D100-00-00_0008	134134	1PCT_100yr	7133.00	57.63	76.35		76.56	0.000338	3.78	2222.99	4323.69	0.20
D100-00-00_0008	134134	0.2PCT_500yr	8564.00	57.63	77.67		77.88	0.000313	3.82	3185.91	5970.70	0.20
D100-00-00_0008	133893	10PCT_10yr	5293.00	57.63	73.53		73.74	0.000363	3.70	1428.86	145.70	0.21
D100-00-00_0008	133893	2PCT_50yr	6527.00	57.63	75.62		75.84	0.000321	3.74	1839.02	2324.10	0.20
D100-00-00_0008	133893	1PCT_100yr	7133.00	57.63	76.26		76.48	0.000324	3.84	2062.41	4695.45	0.20
D100-00-00_0008	133893	0.2PCT_500yr	8564.00	57.63	77.55		77.80	0.000314	4.05	2701.63	5501.41	0.20
D100-00-00_0008	132822	10PCT_10yr	5293.00	54.21	73.12		73.33	0.000402	3.76	1747.56	772.43	0.21
D100-00-00_0008	132822	2PCT_50yr	6527.00	54.21	75.30		75.48	0.000320	3.60	2633.41	1421.93	0.19
D100-00-00_0008	132822	1PCT_100yr	7133.00	54.21	75.94		76.13	0.000315	3.65	2986.57	1865.80	0.19
D100-00-00_0008	132822	0.2PCT_500yr	8564.00	54.21	77.26		77.45	0.000299	3.73	4096.97	3439.05	0.19
D100-00-00_0008	131846	10PCT_10yr	5293.00	55.05	72.79		72.99	0.000309	3.58	1478.75	863.04	0.19
D100-00-00_0008	131846	2PCT_50yr	6527.00	55.05	74.98		75.19	0.000281	3.63	2017.89	2607.75	0.18
D100-00-00_0008	131846	1PCT_100yr	7133.00	55.05	75.62		75.83	0.000289	3.74	2272.22	3937.51	0.19
D100-00-00_0008	131846	0.2PCT_500yr	8564.00	55.05	76.92		77.15	0.000307	3.96	2998.87	5343.74	0.19
D100-00-00_0008	130903	10PCT_10yr	5293.00	55.51	72.36		72.61	0.000515	3.97	1337.08	162.78	0.24
D100-00-00_0008	130903	2PCT_50yr	6527.00	55.51	74.65		74.87	0.000398	3.82	1811.70	1685.30	0.21
D100-00-00_0008	130903	1PCT_100yr	7133.00	55.51	75.28		75.51	0.000391	3.88	2071.81	3858.12	0.21
D100-00-00_0008	130903	0.2PCT_500yr	8564.00	55.51	76.60		76.84	0.000365	4.00	2815.61	5679.82	0.21
D100-00-00_0008	130648	10PCT_10yr	5293.00	55.95	72.13	64.88	72.44	0.000652	4.48	1180.74	135.19	0.27
D100-00-00_0008	130648	2PCT_50yr	6527.00	55.95	74.45	65.81	74.74	0.000510	4.31	1525.28	3690.10	0.24
D100-00-00_0008	130648	1PCT_100yr	7133.00	55.95	75.08	66.22	75.38	0.000519	4.41	1682.93	4758.28	0.24

HEC-RAS Plan: Prop River: D100-00-00 Reach: D100-00-00_0008 (Continued)

Reach	River Sta	Profile	Q Total	Min Ch El	W.S. Elev	Crit W.S.	E.G. Elev	E.G. Slope	Vel Chnl	Flow Area	Top Width	Froude # Chl
			(cfs)	(ft)	(ft)	(ft)	(ft)	(ft/ft)	(ft/s)	(sq ft)	(ft)	
D100-00-00_0008	130648	0.2PCT_500yr	8564.00	55.95	76.38	67.10	76.70	0.000492	4.61	2253.74	6045.29	0.24
D100-00-00_0008	130611		Bridge									
D100-00-00_0008	130574	10PCT_10yr	5293.00	55.95	71.99		72.31	0.000681	4.56	1161.73	134.08	0.27
D100-00-00_0008	130574	2PCT_50yr	6527.00	55.95	74.34		74.63	0.000526	4.36	1498.06	2550.44	0.25
D100-00-00_0008	130574	1PCT_100yr	7133.00	55.95	74.96		75.27	0.000533	4.47	1600.28	5088.12	0.25
D100-00-00_0008	130574	0.2PCT_500yr	8564.00	55.95	76.11		76.46	0.000567	4.78	1997.18	6574.11	0.26
D100-00-00_0008	130416	10PCT_10yr	5293.00	55.95	71.87		72.20	0.000707	4.62	1145.43	153.82	0.28
D100-00-00_0008	130416	2PCT_50yr	6527.00	55.95	74.25		74.55	0.000539	4.40	1503.84	2103.22	0.25
D100-00-00_0008	130416	1PCT_100yr	7133.00	55.95	74.87		75.18	0.000543	4.50	1651.51	4353.06	0.25
D100-00-00_0008	130416	0.2PCT_500yr	8564.00	55.95	76.02		76.37	0.000537	4.79	2168.26	6871.40	0.25
D100-00-00_0008	130170	10PCT_10yr	5293.00	53.70	71.78		72.04	0.000462	4.04	1310.67	133.75	0.23
D100-00-00_0008	130170	2PCT_50yr	6527.00	53.70	74.18		74.42	0.000383	3.95	1682.21	2642.13	0.21
D100-00-00_0008	130170	1PCT_100yr	7133.00	53.70	74.80		75.05	0.000393	4.07	1840.47	4655.82	0.21
D100-00-00_0008	130170	0.2PCT_500yr	8564.00	53.70	75.94		76.24	0.000429	4.38	2277.55	6620.76	0.23
D100-00-00_0008	129484	10PCT_10yr	5293.00	53.89	71.51		71.73	0.000399	3.79	1397.52	213.24	0.21
D100-00-00_0008	129484	2PCT_50yr	6527.00	53.89	73.95		74.17	0.000327	3.70	1797.91	2432.06	0.20
D100-00-00_0008	129484	1PCT_100yr	7133.00	53.89	74.56		74.79	0.000346	3.82	1922.31	3863.18	0.20
D100-00-00_0008	129484	0.2PCT_500yr	8564.00	53.89	75.68		75.94	0.000400	4.14	2169.23	6544.94	0.22
D100-00-00_0008	129251	10PCT_10yr	5293.00	53.77	71.36		71.63	0.000505	4.15	1276.67	221.32	0.24
D100-00-00_0008	129251	2PCT_50yr	6527.00	53.77	73.83		74.08	0.000404	4.00	1648.90	2359.77	0.22
D100-00-00_0008	129251	1PCT_100yr	7133.00	53.77	74.43		74.70	0.000416	4.13	1765.86	3739.25	0.22
D100-00-00_0008	129251	0.2PCT_500yr	8564.00	53.77	75.53		75.84	0.000470	4.48	2014.15	5883.57	0.24
D100-00-00_0008	129094	10PCT_10yr	5293.00	54.09	71.35	60.93	71.52	0.000282	3.23	1638.68	304.46	0.18
D100-00-00_0008	129094	2PCT_50yr	6527.00	54.09	73.83	61.77	73.99	0.000208	3.14	2350.67	3524.96	0.16
D100-00-00_0008	129094	1PCT_100yr	7133.00	54.09	74.44	62.16	74.60	0.000207	3.24	2627.88	4511.69	0.16
D100-00-00_0008	129094	0.2PCT_500yr	8564.00	54.09	75.54	63.01	75.73	0.000219	3.52	3137.45	5886.31	0.17
D100-00-00_0008	129069		Bridge									
D100-00-00_0008	129053	10PCT_10yr	5293.00	54.09	71.29		71.45	0.000276	3.28	1616.04	231.78	0.18
D100-00-00_0008	129053	2PCT_50yr	6527.00	54.09	73.66		73.83	0.000228	3.23	2223.90	2740.70	0.17
D100-00-00_0008	129053	1PCT_100yr	7133.00	54.09	74.25		74.42	0.000229	3.34	2515.33	4241.90	0.17
D100-00-00_0008	129053	0.2PCT_500yr	8564.00	54.09	75.39		75.58	0.000237	3.61	3113.35	5949.49	0.17
D100-00-00_0008	128897	10PCT_10yr	5293.00	54.09	71.24		71.41	0.000279	3.29	1609.01	178.16	0.18
D100-00-00_0008	128897	2PCT_50yr	6527.00	54.09	73.62		73.79	0.000244	3.26	2028.93	2684.37	0.17
D100-00-00_0008	128897	1PCT_100yr	7133.00	54.09	74.21		74.39	0.000251	3.37	2304.17	4246.84	0.17
D100-00-00_0008	128897	0.2PCT_500yr	8564.00	54.09	75.35		75.55	0.000256	3.62	3004.55	6442.91	0.18
D100-00-00_0008	128159	10PCT_10yr	5293.00	51.96	71.04		71.20	0.000288	3.16	1673.32	192.25	0.18
D100-00-00_0008	128159	2PCT_50yr	6527.00	51.96	73.46		73.61	0.000231	3.05	2414.46	2871.15	0.16
D100-00-00_0008	128159	1PCT_100yr	7133.00	51.96	74.05		74.20	0.000229	3.14	2780.26	4800.89	0.16
D100-00-00_0008	128159	0.2PCT_500yr	8564.00	51.96	75.19		75.36	0.000227	3.33	3735.52	7029.76	0.17
D100-00-00_0008	127800	10PCT_10yr	5293.00	51.08	70.94		71.09	0.000287	3.18	1662.62	171.14	0.18
D100-00-00_0008	127800	2PCT_50yr	6527.00	51.08	73.38		73.52	0.000233	3.08	2248.56	2545.55	0.17
D100-00-00_0008	127800	1PCT_100yr	7133.00	51.08	73.96		74.12	0.000234	3.18	2509.03	3825.97	0.17
D100-00-00_0008	127800	0.2PCT_500yr	8564.00	51.08	75.10		75.27	0.000240	3.41	3354.77	7062.90	0.17
D100-00-00_0008	127441	10PCT_10yr	5293.00	51.20	70.80		70.98	0.000329	3.41	1553.71	158.47	0.19
D100-00-00_0008	127441	2PCT_50yr	6527.00	51.20	73.26		73.43	0.000276	3.29	2114.02	2063.32	0.18
D100-00-00_0008	127441	1PCT_100yr	7133.00	51.20	73.85		74.02	0.000284	3.39	2368.15	2833.30	0.18
D100-00-00_0008	127441	0.2PCT_500yr	8564.00	51.20	74.98		75.18	0.000284	3.61	3162.33	6810.67	0.18
D100-00-00_0008	127294	10PCT_10yr	5293.00	51.45	70.77	60.00	70.93	0.000247	3.24	1631.80	142.67	0.17
D100-00-00_0008	127294	2PCT_50yr	6527.00	51.45	73.23	60.84	73.39	0.000205	3.25	2234.17	1811.92	0.16
D100-00-00_0008	127294	1PCT_100yr	7133.00	51.45	73.81	61.21	73.99	0.000209	3.38	2542.47	2814.05	0.16
D100-00-00_0008	127294	0.2PCT_500yr	8564.00	51.45	74.94	62.03	75.14	0.000222	3.67	3268.96	6500.59	0.17
D100-00-00_0008	127264		Bridge									
D100-00-00_0008	127248	10PCT_10yr	5293.00	51.45	70.69		70.86	0.000252	3.27	1621.06	142.26	0.17
D100-00-00_0008	127248	2PCT_50yr	6527.00	51.45	73.05		73.22	0.000221	3.31	2057.86	1493.58	0.16
D100-00-00_0008	127248	1PCT_100yr	7133.00	51.45	73.56		73.75	0.000234	3.46	2300.08	2311.82	0.17
D100-00-00_0008	127248	0.2PCT_500yr	8564.00	51.45	74.73		74.94	0.000248	3.75	2976.17	5802.65	0.18
D100-00-00_0008	127097	10PCT_10yr	5293.00	51.45	70.65		70.82	0.000254	3.28	1615.46	142.04	0.17
D100-00-00_0008	127097	2PCT_50yr	6527.00	51.45	73.02		73.19	0.000223	3.32	2031.40	1559.77	0.16
D100-00-00_0008	127097	1PCT_100yr	7133.00	51.45	73.53		73.71	0.000237	3.48	2161.93	2653.42	0.17
D100-00-00_0008	127097	0.2PCT_500yr	8564.00	51.45	74.68		74.90	0.000257	3.81	2565.33	5618.78	0.18
D100-00-00_0008	126737	10PCT_10yr	5293.00	50.34	70.58		70.73	0.000215	3.07	1725.86	188.19	0.16
D100-00-00_0008	126737	2PCT_50yr	6527.00	50.34	72.96		73.10	0.000199	3.10	2201.92	1729.32	0.16
D100-00-00_0008	126737	1PCT_100yr	7133.00	50.34	73.46		73.62	0.000218	3.24	2380.84	2715.58	0.16

HEC-RAS Plan: Prop River: D100-00-00 Reach: D100-00-00_0008 (Continued)

Reach	River Sta	Profile	Q Total	Min Ch El	W.S. Elev	Crit W.S.	E.G. Elev	E.G. Slope	Vel Chnl	Flow Area	Top Width	Froude # Chl
			(cfs)	(ft)	(ft)	(ft)	(ft)	(ft/ft)	(ft/s)	(sq ft)	(ft)	
D100-00-00_0008	126737	0.2PCT_500yr	8564.00	50.34	74.61		74.80	0.000253	3.49	2900.24	5772.80	0.18
D100-00-00_0008	126365	10PCT_10yr	5293.00	47.73	70.51		70.64	0.000216	2.90	1827.67	183.43	0.16
D100-00-00_0008	126365	2PCT_50yr	6527.00	47.73	72.90		73.03	0.000173	2.87	2701.83	2482.26	0.14
D100-00-00_0008	126365	1PCT_100yr	7133.00	47.73	73.41		73.54	0.000178	2.99	3103.49	3895.38	0.15
D100-00-00_0008	126365	0.2PCT_500yr	8564.00	47.73	74.56		74.71	0.000178	3.16	4142.32	6273.74	0.15
D100-00-00_0008	126053	10PCT_10yr	5895.00	49.15	70.38		70.56	0.000279	3.40	1732.32	217.76	0.18
D100-00-00_0008	126053	2PCT_50yr	7420.00	49.15	72.78		72.96	0.000227	3.44	2522.48	2704.86	0.17
D100-00-00_0008	126053	1PCT_100yr	7904.00	49.15	73.29		73.48	0.000222	3.49	2777.72	4158.81	0.17
D100-00-00_0008	126053	0.2PCT_500yr	9259.00	49.15	74.44		74.64	0.000222	3.68	3483.88	7346.57	0.17
D100-00-00_0008	125607	10PCT_10yr	5895.00	50.64	70.27		70.44	0.000249	3.28	1799.88	997.58	0.17
D100-00-00_0008	125607	2PCT_50yr	7420.00	50.64	72.69		72.86	0.000222	3.35	2446.31	3741.45	0.16
D100-00-00_0008	125607	1PCT_100yr	7904.00	50.64	73.20		73.38	0.000220	3.40	2835.80	4868.59	0.16
D100-00-00_0008	125607	0.2PCT_500yr	9259.00	50.64	74.36		74.54	0.000217	3.53	3891.73	6935.60	0.17
D100-00-00_0008	125104	10PCT_10yr	5895.00	50.45	70.13		70.30	0.000291	3.36	1790.50	259.05	0.18
D100-00-00_0008	125104	2PCT_50yr	7420.00	50.45	72.58		72.74	0.000233	3.29	3084.04	4137.72	0.17
D100-00-00_0008	125104	1PCT_100yr	7904.00	50.45	73.10		73.26	0.000220	3.29	3621.89	5394.62	0.16
D100-00-00_0008	125104	0.2PCT_500yr	9259.00	50.45	74.27		74.43	0.000201	3.34	4825.26	6849.58	0.16
D100-00-00_0008	124835	10PCT_10yr	5895.00	47.02	70.06		70.23	0.000277	3.26	1856.85	456.61	0.18
D100-00-00_0008	124835	2PCT_50yr	7420.00	47.02	72.53		72.68	0.000210	3.18	3403.31	4148.18	0.16
D100-00-00_0008	124835	1PCT_100yr	7904.00	47.02	73.05		73.20	0.000198	3.17	3924.43	5241.85	0.15
D100-00-00_0008	124835	0.2PCT_500yr	9259.00	47.02	74.23		74.37	0.000183	3.23	5086.95	6951.33	0.15
D100-00-00_0008	124514	10PCT_10yr	5895.00	50.63	69.97	59.44	70.14	0.000263	3.29	1824.79	263.84	0.18
D100-00-00_0008	124514	2PCT_50yr	7420.00	50.63	72.46	60.36	72.61	0.000190	3.19	3411.84	3927.85	0.16
D100-00-00_0008	124514	1PCT_100yr	7904.00	50.63	72.99	60.63	73.14	0.000181	3.20	3930.19	4883.50	0.15
D100-00-00_0008	124514	0.2PCT_500yr	9259.00	50.63	74.17	61.36	74.31	0.000169	3.27	5083.35	6479.13	0.15
D100-00-00_0008	124481		Bridge									
D100-00-00_0008	124449	10PCT_10yr	5895.00	50.63	69.82		69.99	0.000273	3.33	1789.85	324.31	0.18
D100-00-00_0008	124449	2PCT_50yr	7420.00	50.63	72.36		72.51	0.000193	3.20	3648.27	3733.86	0.16
D100-00-00_0008	124449	1PCT_100yr	7904.00	50.63	72.92		73.06	0.000180	3.18	4196.26	4495.09	0.15
D100-00-00_0008	124449	0.2PCT_500yr	9259.00	50.63	74.09		74.23	0.000168	3.24	5346.38	6220.90	0.15
D100-00-00_0008	124253	10PCT_10yr	5895.00	48.85	69.72		69.92	0.000344	3.61	1634.26	306.57	0.20
D100-00-00_0008	124253	2PCT_50yr	7420.00	48.85	72.27		72.45	0.000277	3.47	2897.26	3860.33	0.18
D100-00-00_0008	124253	1PCT_100yr	7904.00	48.85	72.83		73.01	0.000257	3.45	3419.38	4509.96	0.18
D100-00-00_0008	124253	0.2PCT_500yr	9259.00	48.85	74.01		74.18	0.000231	3.48	4571.39	6288.68	0.17
D100-00-00_0008	123825	10PCT_10yr	5895.00	47.15	69.62		69.79	0.000259	3.31	1834.39	420.23	0.17
D100-00-00_0008	123825	2PCT_50yr	7420.00	47.15	72.19		72.34	0.000206	3.19	3507.02	3559.55	0.16
D100-00-00_0008	123825	1PCT_100yr	7904.00	47.15	72.76		72.91	0.000199	3.19	4054.08	4261.34	0.16
D100-00-00_0008	123825	0.2PCT_500yr	9259.00	47.15	73.94		74.09	0.000187	3.24	5345.65	6476.93	0.15
D100-00-00_0008	123390	10PCT_10yr	5895.00	48.47	69.53		69.68	0.000207	3.06	1953.25	340.17	0.16
D100-00-00_0008	123390	2PCT_50yr	7420.00	48.47	72.13		72.26	0.000166	2.98	3800.10	2883.99	0.14
D100-00-00_0008	123390	1PCT_100yr	7904.00	48.47	72.69		72.82	0.000162	2.99	4344.00	3568.82	0.14
D100-00-00_0008	123390	0.2PCT_500yr	9259.00	48.47	73.88		74.01	0.000156	3.06	5800.28	6145.25	0.14
D100-00-00_0008	123210	10PCT_10yr	5895.00	48.42	69.52	56.62	69.63	0.000143	2.61	2274.62	271.82	0.13
D100-00-00_0008	123210	2PCT_50yr	7420.00	48.42	72.12	57.59	72.22	0.000117	2.57	4284.63	4603.30	0.12
D100-00-00_0008	123210	1PCT_100yr	7904.00	48.42	72.69	57.87	72.78	0.000113	2.58	4949.80	6505.64	0.12
D100-00-00_0008	123210	0.2PCT_500yr	9259.00	48.42	73.87	58.61	73.97	0.000110	2.64	6507.23	7297.91	0.12
D100-00-00_0008	123156		Bridge									
D100-00-00_0008	123103	10PCT_10yr	5895.00	48.42	69.39		69.50	0.000147	2.60	2310.51	367.50	0.13
D100-00-00_0008	123103	2PCT_50yr	7420.00	48.42	71.95		72.04	0.000127	2.53	4554.58	4695.87	0.13
D100-00-00_0008	123103	1PCT_100yr	7904.00	48.42	72.53		72.62	0.000118	2.51	5365.85	5541.78	0.12
D100-00-00_0008	123103	0.2PCT_500yr	9259.00	48.42	73.76		73.84	0.000106	2.53	7097.08	7263.31	0.12
D100-00-00_0008	122816	10PCT_10yr	5895.00	47.48	69.29		69.43	0.000202	3.07	2213.25	847.18	0.16
D100-00-00_0008	122816	2PCT_50yr	7420.00	47.48	71.88		72.00	0.000146	2.86	4825.45	4312.90	0.14
D100-00-00_0008	122816	1PCT_100yr	7904.00	47.48	72.47		72.58	0.000137	2.83	5521.41	4716.13	0.13
D100-00-00_0008	122816	0.2PCT_500yr	9259.00	47.48	73.70		73.80	0.000131	2.88	7131.56	5851.54	0.13
D100-00-00_0008	122368	10PCT_10yr	5895.00	47.03	69.21		69.34	0.000180	2.90	2092.29	704.39	0.15
D100-00-00_0008	122368	2PCT_50yr	7420.00	47.03	71.82		71.93	0.000139	2.76	4676.21	4410.97	0.13
D100-00-00_0008	122368	1PCT_100yr	7904.00	47.03	72.41		72.52	0.000132	2.73	5400.77	5026.58	0.13
D100-00-00_0008	122368	0.2PCT_500yr	9259.00	47.03	73.65		73.75	0.000124	2.75	6951.42	6059.93	0.13
D100-00-00_0008	121866	10PCT_10yr	5895.00	47.79	69.12		69.25	0.000203	2.84	2174.07	894.56	0.15
D100-00-00_0008	121866	2PCT_50yr	7420.00	47.79	71.77		71.86	0.000131	2.52	5191.38	4012.76	0.13
D100-00-00_0008	121866	1PCT_100yr	7904.00	47.79	72.37		72.45	0.000115	2.43	6137.76	5260.75	0.12
D100-00-00_0008	121866	0.2PCT_500yr	9259.00	47.79	73.62		73.68	0.000094	2.35	8106.56	5967.92	0.11

HEC-RAS Plan: Prop River: D100-00-00 Reach: D100-00-00_0008 (Continued)

Reach	River Sta	Profile	Q Total	Min Ch El	W.S. Elev	Crit W.S.	E.G. Elev	E.G. Slope	Vel Chnl	Flow Area	Top Width	Froude # Chl
			(cfs)	(ft)	(ft)	(ft)	(ft)	(ft/ft)	(ft/s)	(sq ft)	(ft)	
D100-00-00_0008	121350	10PCT_10yr	5895.00	43.99	69.06		69.16	0.000132	2.55	2431.93	503.32	0.13
D100-00-00_0008	121350	2PCT_50yr	7420.00	43.99	71.71		71.80	0.000096	2.47	4933.14	4424.97	0.11
D100-00-00_0008	121350	1PCT_100yr	7904.00	43.99	72.31		72.39	0.000089	2.43	5818.43	4979.46	0.11
D100-00-00_0008	121350	0.2PCT_500yr	9259.00	43.99	73.56		73.64	0.000079	2.41	7746.07	6977.46	0.10
D100-00-00_0008	121134	10PCT_10yr	5895.00	44.06	69.05	55.80	69.11	0.000114	2.09	2950.95	693.37	0.12
D100-00-00_0008	121134	2PCT_50yr	7420.00	44.06	71.71	56.88	71.77	0.000075	1.97	5512.82	4462.58	0.10
D100-00-00_0008	121134	1PCT_100yr	7904.00	44.06	72.31	57.16	72.36	0.000068	1.94	6381.87	4826.98	0.09
D100-00-00_0008	121134	0.2PCT_500yr	9259.00	44.06	73.56	57.92	73.61	0.000061	1.94	8208.28	6572.77	0.09
D100-00-00_0008	121081		Bridge									
D100-00-00_0008	121028	10PCT_10yr	5895.00	44.06	68.91		68.98	0.000117	2.12	2943.80	729.10	0.12
D100-00-00_0008	121028	2PCT_50yr	7420.00	44.06	71.55		71.61	0.000078	2.02	5214.16	3923.41	0.10
D100-00-00_0008	121028	1PCT_100yr	7904.00	44.06	72.18		72.24	0.000071	1.99	6102.40	4684.28	0.10
D100-00-00_0008	121028	0.2PCT_500yr	9259.00	44.06	73.50		73.55	0.000062	1.98	8016.07	6302.33	0.09
D100-00-00_0008	120719	10PCT_10yr	7587.00	46.28	68.50		68.84	0.000337	4.66	1673.77	240.51	0.21
D100-00-00_0008	120719	2PCT_50yr	9751.00	46.28	71.13		71.48	0.000305	4.86	3313.44	3214.36	0.20
D100-00-00_0008	120719	1PCT_100yr	10609.00	46.28	71.77		72.11	0.000295	4.89	4171.90	4098.41	0.20
D100-00-00_0008	120719	0.2PCT_500yr	13002.00	46.28	73.13		73.44	0.000276	4.96	6171.60	5665.71	0.20
D100-00-00_0008	120293	10PCT_10yr	7587.00	45.69	68.44		68.67	0.000290	3.83	1980.63	156.11	0.19
D100-00-00_0008	120293	2PCT_50yr	9751.00	45.69	71.08		71.33	0.000268	4.01	3061.22	3597.01	0.18
D100-00-00_0008	120293	1PCT_100yr	10609.00	45.69	71.72		71.96	0.000258	4.05	3984.70	4318.89	0.18
D100-00-00_0008	120293	0.2PCT_500yr	13002.00	45.69	73.06		73.30	0.000244	4.16	5964.64	4898.38	0.18
D100-00-00_0008	120023	10PCT_10yr	7587.00	45.34	68.26		68.58	0.000318	4.54	1689.43	125.64	0.20
D100-00-00_0008	120023	2PCT_50yr	9751.00	45.34	70.97		71.25	0.000265	4.50	3986.52	3155.67	0.19
D100-00-00_0008	120023	1PCT_100yr	10609.00	45.34	71.62		71.89	0.000250	4.47	4920.59	4302.51	0.18
D100-00-00_0008	120023	0.2PCT_500yr	13002.00	45.34	72.99		73.23	0.000230	4.51	6930.39	4766.32	0.18
D100-00-00_0008	119209	10PCT_10yr	9266.00	44.84	67.65		68.20	0.000583	6.00	1570.37	103.77	0.27
D100-00-00_0008	119209	2PCT_50yr	12957.00	44.84	70.43		70.92	0.000517	6.04	4642.59	3575.67	0.26
D100-00-00_0008	119209	1PCT_100yr	14326.00	44.84	71.15		71.58	0.000471	5.93	5777.22	4275.51	0.25
D100-00-00_0008	119209	0.2PCT_500yr	18098.00	44.84	72.57		72.95	0.000424	5.93	8242.56	5009.55	0.24
D100-00-00_0008	118767	10PCT_10yr	9266.00	43.83	67.64		67.91	0.000371	4.17	2223.17	183.15	0.21
D100-00-00_0008	118767	2PCT_50yr	12957.00	43.83	70.41		70.68	0.000322	4.35	5225.29	4346.52	0.20
D100-00-00_0008	118767	1PCT_100yr	14326.00	43.83	71.12		71.37	0.000294	4.29	6677.38	4992.51	0.19
D100-00-00_0008	118767	0.2PCT_500yr	18098.00	43.83	72.54		72.76	0.000265	4.33	9573.22	6981.71	0.19
D100-00-00_0008	118269	10PCT_10yr	9266.00	44.04	67.44		67.73	0.000347	4.34	2176.27	314.33	0.21
D100-00-00_0008	118269	2PCT_50yr	12957.00	44.04	70.30		70.51	0.000274	4.05	7148.81	5486.79	0.19
D100-00-00_0008	118269	1PCT_100yr	14326.00	44.04	71.03		71.21	0.000240	3.91	8831.46	6108.02	0.18
D100-00-00_0008	118269	0.2PCT_500yr	18098.00	44.04	72.47		72.62	0.000207	3.86	12141.04	6588.19	0.17
D100-00-00_0008	117459	10PCT_10yr	9600.00	43.62	67.08		67.41	0.000456	4.62	2082.72	214.35	0.23
D100-00-00_0008	117459	2PCT_50yr	12957.00	43.62	70.02		70.27	0.000331	4.30	6042.22	4005.63	0.20
D100-00-00_0008	117459	1PCT_100yr	14326.00	43.62	70.79		71.01	0.000289	4.16	7826.50	4812.31	0.19
D100-00-00_0008	117459	0.2PCT_500yr	18098.00	43.62	72.28		72.45	0.000239	4.04	11315.36	6209.64	0.18
D100-00-00_0008	116858	10PCT_10yr	9600.00	42.29	66.79		67.14	0.000439	4.73	2030.82	154.78	0.23
D100-00-00_0008	116858	2PCT_50yr	12957.00	42.29	69.64		70.02	0.000481	5.01	3429.14	3624.26	0.24
D100-00-00_0008	116858	1PCT_100yr	14326.00	42.29	70.42		70.78	0.000444	5.01	4524.93	4692.92	0.24
D100-00-00_0008	116858	0.2PCT_500yr	18098.00	42.29	71.91		72.25	0.000409	5.14	6940.48	7120.07	0.23
D100-00-00_0008	116609	10PCT_10yr	9600.00	43.56	66.77	53.27	67.00	0.000259	3.87	2481.15	174.76	0.18
D100-00-00_0008	116609	2PCT_50yr	12957.00	43.56	69.60	54.91	69.87	0.000307	4.21	3909.75	6973.22	0.20
D100-00-00_0008	116609	1PCT_100yr	14326.00	43.56	70.37	55.52	70.64	0.000311	4.25	4975.31	8692.36	0.20
D100-00-00_0008	116609	0.2PCT_500yr	18098.00	43.56	71.86	57.06	72.13	0.000300	4.46	7090.02	9890.61	0.20
D100-00-00_0008	116459		Bridge									
D100-00-00_0008	116310	10PCT_10yr	9600.00	43.56	66.44		66.68	0.000278	3.95	2447.66	207.18	0.19
D100-00-00_0008	116310	2PCT_50yr	12957.00	43.56	68.95		69.24	0.000286	4.40	3849.56	4417.48	0.19
D100-00-00_0008	116310	1PCT_100yr	14326.00	43.56	69.66		69.96	0.000287	4.54	4718.04	6060.28	0.20
D100-00-00_0008	116310	0.2PCT_500yr	18098.00	43.56	71.07		71.41	0.000307	4.96	6462.42	7744.68	0.21
D100-00-00_0008	116033	10PCT_10yr	9600.00	38.16	66.31		66.59	0.000335	4.22	2277.92	176.01	0.20
D100-00-00_0008	116033	2PCT_50yr	12957.00	38.16	68.81		69.14	0.000375	4.65	3386.40	3025.86	0.22
D100-00-00_0008	116033	1PCT_100yr	14326.00	38.16	69.51		69.86	0.000380	4.83	3887.23	3755.58	0.22
D100-00-00_0008	116033	0.2PCT_500yr	18098.00	38.16	70.86		71.28	0.000424	5.41	4905.75	6469.77	0.24
D100-00-00_0008	115557	10PCT_10yr	9600.00	40.91	66.10		66.42	0.000358	4.50	2134.51	148.03	0.21
D100-00-00_0008	115557	2PCT_50yr	12957.00	40.91	68.56		68.95	0.000396	5.05	3356.51	3244.27	0.22
D100-00-00_0008	115557	1PCT_100yr	14326.00	40.91	69.26		69.67	0.000401	5.23	4035.78	5281.43	0.23
D100-00-00_0008	115557	0.2PCT_500yr	18098.00	40.91	70.60		71.07	0.000443	5.79	5434.54	7608.73	0.24
D100-00-00_0008	115199	10PCT_10yr	9600.00	42.95	66.03		66.26	0.000362	3.91	2457.29	303.52	0.21
D100-00-00_0008	115199	2PCT_50yr	12957.00	42.95	68.52		68.78	0.000338	4.17	4177.59	4030.64	0.20

HEC-RAS Plan: Prop River: D100-00-00 Reach: D100-00-00_0008 (Continued)

Reach	River Sta	Profile	Q Total	Min Ch El	W.S. Elev	Crit W.S.	E.G. Elev	E.G. Slope	Vel Chnl	Flow Area	Top Width	Froude # Chl
			(cfs)	(ft)	(ft)	(ft)	(ft)	(ft/ft)	(ft/s)	(sq ft)	(ft)	
D100-00-00_0008	115199	1PCT_100yr	14326.00	42.95	69.23		69.49	0.000331	4.24	5105.03	6163.63	0.20
D100-00-00_0008	115199	0.2PCT_500yr	18098.00	42.95	70.59		70.88	0.000337	4.57	6959.92	7787.97	0.21
D100-00-00_0008	114805	10PCT_10yr	9600.00	41.96	65.90		66.13	0.000328	3.83	2508.02	281.80	0.20
D100-00-00_0008	114805	2PCT_50yr	12957.00	41.96	68.39		68.64	0.000353	4.10	3816.01	4343.65	0.21
D100-00-00_0008	114805	1PCT_100yr	14326.00	41.96	69.09		69.36	0.000344	4.21	4570.72	6311.87	0.21
D100-00-00_0008	114805	0.2PCT_500yr	18098.00	41.96	70.43		70.74	0.000360	4.60	6022.21	8189.10	0.22
D100-00-00_0008	114251	10PCT_10yr	9600.00	40.87	65.63		65.92	0.000386	4.35	2205.20	231.61	0.21
D100-00-00_0008	114251	2PCT_50yr	12957.00	40.87	68.06		68.41	0.000457	4.81	3064.98	4240.01	0.24
D100-00-00_0008	114251	1PCT_100yr	14326.00	40.87	68.75		69.13	0.000458	4.99	3536.31	6401.25	0.24
D100-00-00_0008	114251	0.2PCT_500yr	18098.00	40.87	70.02		70.49	0.000515	5.61	4516.11	8622.93	0.26
D100-00-00_0008	113855	10PCT_10yr	9600.00	40.52	65.53		65.77	0.000309	3.90	2464.09	374.34	0.19
D100-00-00_0008	113855	2PCT_50yr	12957.00	40.52	67.96		68.24	0.000331	4.28	3611.64	4923.58	0.20
D100-00-00_0008	113855	1PCT_100yr	14326.00	40.52	68.65		68.95	0.000333	4.44	4182.48	6842.59	0.21
D100-00-00_0008	113855	0.2PCT_500yr	18098.00	40.52	69.92		70.28	0.000374	4.98	5258.18	8877.65	0.22
D100-00-00_0008	113759	10PCT_10yr	9600.00	40.52	65.50	52.16	65.74	0.000312	3.91	2464.55	327.53	0.19
D100-00-00_0008	113759	2PCT_50yr	12957.00	40.52	67.93	54.20	68.21	0.000332	4.28	3797.69	4295.31	0.20
D100-00-00_0008	113759	1PCT_100yr	14326.00	40.52	68.62	54.84	68.92	0.000334	4.44	4401.83	6660.34	0.21
D100-00-00_0008	113759	0.2PCT_500yr	18098.00	40.52	69.89	56.49	70.25	0.000378	4.99	5509.13	8630.95	0.22
D100-00-00_0008	113704		Bridge									
D100-00-00_0008	113654	10PCT_10yr	9600.00	40.52	65.32		65.57	0.000314	3.96	2423.52	460.98	0.20
D100-00-00_0008	113654	2PCT_50yr	12957.00	40.52	67.50		67.81	0.000341	4.52	3344.25	3684.50	0.21
D100-00-00_0008	113654	1PCT_100yr	14326.00	40.52	68.09		68.43	0.000357	4.75	3925.74	5728.75	0.21
D100-00-00_0008	113654	0.2PCT_500yr	18098.00	40.52	69.39		69.81	0.000404	5.33	5233.66	8054.29	0.23
D100-00-00_0008	113241	10PCT_10yr	9600.00	40.49	65.20		65.44	0.000280	3.95	2478.23	450.08	0.19
D100-00-00_0008	113241	2PCT_50yr	12957.00	40.49	67.36		67.67	0.000323	4.53	3381.52	3637.20	0.20
D100-00-00_0008	113241	1PCT_100yr	14326.00	40.49	67.93		68.28	0.000344	4.79	3766.55	4863.67	0.21
D100-00-00_0008	113241	0.2PCT_500yr	18098.00	40.49	69.19		69.63	0.000402	5.45	5010.84	9104.46	0.23
D100-00-00_0008	112774	10PCT_10yr	9600.00	40.56	65.07		65.31	0.000292	3.96	2424.42	483.44	0.19
D100-00-00_0008	112774	2PCT_50yr	12957.00	40.56	67.21		67.52	0.000347	4.51	3442.66	4224.37	0.21
D100-00-00_0008	112774	1PCT_100yr	14326.00	40.56	67.77		68.12	0.000365	4.76	3965.07	5678.86	0.22
D100-00-00_0008	112774	0.2PCT_500yr	18098.00	40.56	69.02		69.44	0.000415	5.35	5295.61	8959.69	0.24
D100-00-00_0008	112288	10PCT_10yr	13433.00	39.36	64.76		65.13	0.000385	4.87	2774.61	433.08	0.22
D100-00-00_0008	112288	2PCT_50yr	17208.00	39.36	66.88		67.31	0.000446	5.31	4197.74	3843.61	0.24
D100-00-00_0008	112288	1PCT_100yr	18226.00	39.36	67.49		67.92	0.000424	5.32	4986.73	5149.08	0.24
D100-00-00_0008	112288	0.2PCT_500yr	21615.00	39.36	68.78		69.23	0.000418	5.57	6720.47	8893.61	0.24
D100-00-00_0008	111704	10PCT_10yr	13433.00	40.28	64.54		64.89	0.000418	4.80	2975.50	1170.83	0.23
D100-00-00_0008	111704	2PCT_50yr	17208.00	40.28	66.67		67.04	0.000408	5.01	5318.09	3648.07	0.23
D100-00-00_0008	111704	1PCT_100yr	18226.00	40.28	67.31		67.66	0.000377	4.95	6269.76	4992.83	0.22
D100-00-00_0008	111704	0.2PCT_500yr	21615.00	40.28	68.63		68.98	0.000352	5.06	8699.00	8900.49	0.22
D100-00-00_0008	111015	10PCT_10yr	13433.00	38.34	64.25		64.61	0.000416	4.85	3424.71	966.68	0.23
D100-00-00_0008	111015	2PCT_50yr	17208.00	38.34	66.42		66.77	0.000372	5.00	6250.08	3092.84	0.22
D100-00-00_0008	111015	1PCT_100yr	18226.00	38.34	67.08		67.41	0.000335	4.88	7491.47	4314.47	0.21
D100-00-00_0008	111015	0.2PCT_500yr	21615.00	38.34	68.44		68.74	0.000301	4.88	10483.34	8414.46	0.20
D100-00-00_0008	110326	10PCT_10yr	13433.00	39.75	64.03		64.35	0.000309	4.58	3598.47	1218.73	0.20
D100-00-00_0008	110326	2PCT_50yr	17208.00	39.75	66.24		66.55	0.000273	4.68	7887.13	4394.08	0.19
D100-00-00_0008	110326	1PCT_100yr	18226.00	39.75	66.94		67.21	0.000240	4.50	9778.44	5127.03	0.18
D100-00-00_0008	110326	0.2PCT_500yr	21615.00	39.75	68.34		68.56	0.000208	4.39	13611.74	8660.62	0.17
D100-00-00_0008	110003	10PCT_10yr	13433.00	38.04	63.83	51.36	64.20	0.000561	4.96	3068.10	785.50	0.26
D100-00-00_0008	110003	2PCT_50yr	17208.00	38.04	66.11	53.12	66.44	0.000415	4.82	7160.00	4187.96	0.23
D100-00-00_0008	110003	1PCT_100yr	18226.00	38.04	66.85	53.53	67.12	0.000340	4.52	9379.03	5431.41	0.21
D100-00-00_0008	110003	0.2PCT_500yr	21615.00	38.04	68.28	54.86	68.48	0.000260	4.21	13687.65	9717.29	0.19
D100-00-00_0008	109968		Bridge									
D100-00-00_0008	109934	10PCT_10yr	13433.00	38.04	63.67		64.07	0.000500	5.11	3047.51	696.35	0.25
D100-00-00_0008	109934	2PCT_50yr	17208.00	38.04	65.93		66.29	0.000411	5.09	6783.59	3926.17	0.23
D100-00-00_0008	109934	1PCT_100yr	18226.00	38.04	66.66		66.97	0.000346	4.82	8969.69	5367.51	0.21
D100-00-00_0008	109934	0.2PCT_500yr	21615.00	38.04	68.10		68.34	0.000270	4.51	13340.93	9677.41	0.19
D100-00-00_0008	109510	10PCT_10yr	13433.00	38.95	63.52		63.86	0.000345	4.72	3477.12	761.78	0.21
D100-00-00_0008	109510	2PCT_50yr	17208.00	38.95	65.80		66.12	0.000298	4.81	6385.16	3575.39	0.20
D100-00-00_0008	109510	1PCT_100yr	18226.00	38.95	66.55		66.83	0.000262	4.63	8278.20	5758.05	0.19
D100-00-00_0008	109510	0.2PCT_500yr	21615.00	38.95	68.00		68.23	0.000222	4.49	12593.03	9925.93	0.18
D100-00-00_0008	108717	10PCT_10yr	13433.00	38.39	63.24		63.57	0.000378	4.71	3895.58	1055.02	0.22
D100-00-00_0008	108717	2PCT_50yr	17208.00	38.39	65.61		65.87	0.000289	4.53	7557.28	3583.56	0.20
D100-00-00_0008	108717	1PCT_100yr	18226.00	38.39	66.39		66.62	0.000247	4.31	9414.01	5775.07	0.18
D100-00-00_0008	108717	0.2PCT_500yr	21615.00	38.39	67.87		68.05	0.000202	4.13	13383.51	10619.42	0.17

HEC-RAS Plan: Prop River: D100-00-00 Reach: D100-00-00_0008 (Continued)

Reach	River Sta	Profile	Q Total	Min Ch El	W.S. Elev	Crit W.S.	E.G. Elev	E.G. Slope	Vel Chnl	Flow Area	Top Width	Froude # Chl
			(cfs)	(ft)	(ft)	(ft)	(ft)	(ft/ft)	(ft/s)	(sq ft)	(ft)	
D100-00-00_0008	107211	10PCT_10yr	13433.00	38.86	63.06		63.38	0.000062	4.62	4273.99	1240.09	0.21
D100-00-00_0008	107211	2PCT_50yr	17208.00	38.86	65.36		65.70	0.000059	4.88	7136.09	4141.61	0.21
D100-00-00_0008	107211	1PCT_100yr	18226.00	38.86	66.13		66.46	0.000055	4.84	8202.90	5462.58	0.20
D100-00-00_0008	107211	0.2PCT_500yr	21615.00	38.86	67.54		67.90	0.000055	5.10	10252.21	10392.15	0.20
D100-00-00_0008	106742	10PCT_10yr	13870.00	38.06	62.73		63.32	0.000133	6.15	2714.11	1433.33	0.30
D100-00-00_0008	106742	2PCT_50yr	17159.00	38.06	65.08		65.64	0.000108	6.16	5009.59	4355.70	0.28
D100-00-00_0008	106742	1PCT_100yr	18602.00	38.06	65.83		66.40	0.000104	6.25	5823.81	5461.06	0.27
D100-00-00_0008	106742	0.2PCT_500yr	21654.00	38.06	67.26		67.84	0.000099	6.43	7508.90	9999.13	0.27
D100-00-00_0008	106423	10PCT_10yr	13870.00	38.24	62.72	52.53	63.25	0.000142	5.83	2498.08	844.87	0.30
D100-00-00_0008	106423	2PCT_50yr	17159.00	38.24	65.06	54.01	65.60	0.000119	5.94	3368.04	4084.28	0.29
D100-00-00_0008	106423	1PCT_100yr	18602.00	38.24	65.80	54.59	66.36	0.000115	6.06	3962.79	5186.05	0.28
D100-00-00_0008	106423	0.2PCT_500yr	21654.00	38.24	67.21	55.74	67.80	0.000109	6.30	5283.71	10937.62	0.28
D100-00-00_0008	106272		Bridge									
D100-00-00_0008	106089	10PCT_10yr	13870.00	38.24	62.61		63.08	0.000197	5.60	2895.81	1404.75	0.29
D100-00-00_0008	106089	2PCT_50yr	17159.00	38.24	64.89		65.30	0.000155	5.41	4090.74	4629.58	0.26
D100-00-00_0008	106089	1PCT_100yr	18602.00	38.24	65.54		65.95	0.000149	5.46	4556.43	5304.23	0.26
D100-00-00_0008	106089	0.2PCT_500yr	21654.00	38.24	66.78		67.18	0.000136	5.53	5667.85	8982.70	0.25
D100-00-00_0008	105986	10PCT_10yr	13870.00	38.24	62.51		63.04	0.000140	5.89	2703.29	2611.60	0.30
D100-00-00_0008	105986	2PCT_50yr	17159.00	38.24	64.81		65.27	0.000107	5.69	4123.04	3811.06	0.27
D100-00-00_0008	105986	1PCT_100yr	18602.00	38.24	65.45		65.92	0.000104	5.78	4559.20	4672.67	0.27
D100-00-00_0008	105986	0.2PCT_500yr	21654.00	38.24	66.66		67.15	0.000099	5.97	5386.42	7713.44	0.27
D100-00-00_0008	104874	10PCT_10yr	13870.00	36.72	62.46		62.87	0.000105	5.26	3056.37	1534.96	0.26
D100-00-00_0008	104874	2PCT_50yr	17159.00	36.72	64.77		65.14	0.000080	5.15	4455.58	4929.02	0.24
D100-00-00_0008	104874	1PCT_100yr	18602.00	36.72	65.41		65.79	0.000078	5.25	4862.69	6309.61	0.24
D100-00-00_0008	104874	0.2PCT_500yr	21654.00	36.72	66.62		67.03	0.000077	5.46	5634.29	8871.55	0.24
D100-00-00_0008	104710	10PCT_10yr	13870.00	36.72	62.41	51.59	62.85	0.000116	5.36	2940.17	1506.42	0.28
D100-00-00_0008	104710	2PCT_50yr	17159.00	36.72	64.74	53.09	65.13	0.000085	5.20	4388.74	5339.78	0.24
D100-00-00_0008	104710	1PCT_100yr	18602.00	36.72	65.38	53.67	65.78	0.000083	5.29	4790.35	5950.30	0.24
D100-00-00_0008	104710	0.2PCT_500yr	21654.00	36.72	66.60	54.80	67.01	0.000081	5.49	5550.78	8476.45	0.24
D100-00-00_0008	104688		Bridge									
D100-00-00_0008	104651	10PCT_10yr	13870.00	36.72	62.10		62.61	0.000113	5.80	2698.34	1230.08	0.28
D100-00-00_0008	104651	2PCT_50yr	17159.00	36.72	64.56		65.02	0.000087	5.69	4118.89	4832.06	0.25
D100-00-00_0008	104651	1PCT_100yr	18602.00	36.72	65.25		65.72	0.000085	5.78	4534.80	6009.39	0.25
D100-00-00_0008	104651	0.2PCT_500yr	21654.00	36.72	66.44		66.94	0.000085	6.06	5248.69	8296.52	0.25
D100-00-00_0008	104492	10PCT_10yr	13870.00	36.72	62.08		62.59	0.000112	5.78	2799.47	1430.84	0.28
D100-00-00_0008	104492	2PCT_50yr	17159.00	36.72	64.55		65.00	0.000086	5.64	4355.74	4667.58	0.25
D100-00-00_0008	104492	1PCT_100yr	18602.00	36.72	65.24		65.70	0.000084	5.73	4815.87	6317.80	0.25
D100-00-00_0008	104492	0.2PCT_500yr	21654.00	36.72	66.43		66.92	0.000084	6.00	5605.36	8468.51	0.25
D100-00-00_0008	103726	10PCT_10yr	13870.00	36.67	62.04		62.48	0.000111	5.35	2944.82	862.98	0.27
D100-00-00_0008	103726	2PCT_50yr	17159.00	36.67	64.51		64.92	0.000089	5.22	4660.90	6629.04	0.25
D100-00-00_0008	103726	1PCT_100yr	18602.00	36.67	65.21		65.62	0.000086	5.28	5273.42	7812.33	0.25
D100-00-00_0008	103726	0.2PCT_500yr	21654.00	36.67	66.41		66.83	0.000083	5.47	6325.43	9900.96	0.24
D100-00-00_0008	103507	10PCT_10yr	13870.00	36.67	62.01	51.20	62.46	0.000113	5.39	2636.79	873.42	0.27
D100-00-00_0008	103507	2PCT_50yr	17159.00	36.67	64.43	52.79	64.88	0.000097	5.42	3983.37	6841.44	0.26
D100-00-00_0008	103507	1PCT_100yr	18602.00	36.67	65.12	53.37	65.58	0.000095	5.53	4599.82	7873.22	0.26
D100-00-00_0008	103507	0.2PCT_500yr	21654.00	36.67	66.30	54.53	66.79	0.000093	5.77	5695.53	9619.77	0.26
D100-00-00_0008	103453		Bridge									
D100-00-00_0008	103413	10PCT_10yr	13870.00	36.67	61.88		62.34	0.000116	5.44	2666.34	1108.69	0.28
D100-00-00_0008	103413	2PCT_50yr	17159.00	36.67	64.09		64.56	0.000108	5.55	3965.23	6460.14	0.27
D100-00-00_0008	103413	1PCT_100yr	18602.00	36.67	64.69		65.19	0.000110	5.71	4435.62	7471.63	0.28
D100-00-00_0008	103413	0.2PCT_500yr	21654.00	36.67	65.73		66.28	0.000114	6.04	5380.98	8665.98	0.28
D100-00-00_0008	103205	10PCT_10yr	13870.00	36.67	61.85		62.32	0.000117	5.46	2542.05	1002.06	0.28
D100-00-00_0008	103205	2PCT_50yr	17159.00	36.67	64.06		64.54	0.000107	5.58	3642.58	6850.61	0.27
D100-00-00_0008	103205	1PCT_100yr	18602.00	36.67	64.66		65.16	0.000107	5.73	4157.66	7683.00	0.27
D100-00-00_0008	103205	0.2PCT_500yr	21654.00	36.67	65.71		66.26	0.000108	6.05	5197.57	8530.89	0.28
D100-00-00_0008	101972	10PCT_10yr	18869.00	35.92	61.27		62.11	0.000165	7.33	2588.69	691.86	0.34
D100-00-00_0008	101972	2PCT_50yr	22483.00	35.92	63.50		64.35	0.000142	7.44	4094.96	7065.59	0.32
D100-00-00_0008	101972	1PCT_100yr	23624.00	35.92	64.16		64.98	0.000134	7.40	4975.77	8341.41	0.31
D100-00-00_0008	101972	0.2PCT_500yr	27142.00	35.92	65.18		66.07	0.000138	7.80	6343.47	9473.75	0.32
D100-00-00_0008	101747	10PCT_10yr	18869.00	35.92	61.23	51.43	62.07	0.000167	7.35	2567.72	1143.08	0.34
D100-00-00_0008	101747	2PCT_50yr	22483.00	35.92	63.48	52.71	64.30	0.000141	7.39	4239.97	7336.31	0.32
D100-00-00_0008	101747	1PCT_100yr	23624.00	35.92	64.14	53.12	64.94	0.000131	7.32	5064.47	9006.93	0.31
D100-00-00_0008	101747	0.2PCT_500yr	27142.00	35.92	65.18	54.22	66.02	0.000133	7.66	6339.10	11180.82	0.32

HEC-RAS Plan: Prop River: D100-00-00 Reach: D100-00-00_0008 (Continued)

Reach	River Sta	Profile	Q Total	Min Ch El	W.S. Elev	Crit W.S.	E.G. Elev	E.G. Slope	Vel Chnl	Flow Area	Top Width	Froude # Chl
			(cfs)	(ft)	(ft)	(ft)	(ft)	(ft/ft)	(ft/s)	(sq ft)	(ft)	
D100-00-00_0008	101704		Bridge									
D100-00-00_0008	101662	10PCT_10yr	18869.00	35.92	60.79		61.68	0.000181	7.58	2490.51	974.07	0.35
D100-00-00_0008	101662	2PCT_50yr	22483.00	35.92	62.57		63.54	0.000175	7.94	3241.97	4409.94	0.35
D100-00-00_0008	101662	1PCT_100yr	23624.00	35.92	63.11		64.08	0.000169	7.99	3766.58	6706.80	0.35
D100-00-00_0008	101662	0.2PCT_500yr	27142.00	35.92	64.47		65.44	0.000157	8.12	5369.75	9401.34	0.34
D100-00-00_0008	101444	10PCT_10yr	18869.00	35.92	60.74		61.64	0.000182	7.59	2543.31	1503.12	0.35
D100-00-00_0008	101444	2PCT_50yr	22483.00	35.92	62.53		63.49	0.000174	7.91	3615.33	5217.43	0.35
D100-00-00_0008	101444	1PCT_100yr	23624.00	35.92	63.08		64.03	0.000168	7.95	4203.69	7410.88	0.35
D100-00-00_0008	101444	0.2PCT_500yr	27142.00	35.92	64.45		65.40	0.000156	8.08	5809.08	9533.06	0.34
D100-00-00_0008	101046	10PCT_10yr	18869.00	35.92	60.68		61.56	0.000181	7.55	3340.77	2249.85	0.35
D100-00-00_0008	101046	2PCT_50yr	22483.00	35.92	62.52		63.40	0.000165	7.69	5314.76	5466.39	0.34
D100-00-00_0008	101046	1PCT_100yr	23624.00	35.92	63.08		63.94	0.000156	7.67	6063.04	6931.74	0.34
D100-00-00_0008	101046	0.2PCT_500yr	27142.00	35.92	64.47		65.30	0.000142	7.72	7944.27	9485.78	0.32
D100-00-00_0008	99641	10PCT_10yr	18869.00	35.30	60.40		61.30	0.000185	7.63	2472.54	1029.06	0.36
D100-00-00_0008	99641	2PCT_50yr	22483.00	35.30	62.13		63.14	0.000189	8.06	3070.26	3489.47	0.36
D100-00-00_0008	99641	1PCT_100yr	23624.00	35.30	62.65		63.68	0.000190	8.18	3324.40	4725.68	0.37
D100-00-00_0008	99641	0.2PCT_500yr	27142.00	35.30	63.91		65.04	0.000197	8.59	4325.94	8248.46	0.38
D100-00-00_0008	98913	10PCT_10yr	18570.00	35.39	60.28		61.16	0.000182	7.54	2860.96	1991.27	0.35
D100-00-00_0008	98913	2PCT_50yr	21759.00	35.39	62.06		62.98	0.000176	7.74	3787.15	4250.94	0.35
D100-00-00_0008	98913	1PCT_100yr	22969.00	35.39	62.58		63.52	0.000177	7.87	4094.30	6023.96	0.35
D100-00-00_0008	98913	0.2PCT_500yr	26556.00	35.39	63.82		64.87	0.000187	8.32	5122.13	8843.73	0.37
D100-00-00_0008	97857	10PCT_10yr	18570.00	35.12	60.20		60.94	0.000161	6.91	3081.42	1262.95	0.33
D100-00-00_0008	97857	2PCT_50yr	21759.00	35.12	61.99		62.76	0.000155	7.09	3759.19	4450.03	0.33
D100-00-00_0008	97857	1PCT_100yr	22969.00	35.12	62.50		63.30	0.000157	7.22	3999.67	5796.07	0.33
D100-00-00_0008	97857	0.2PCT_500yr	26556.00	35.12	63.75		64.64	0.000164	7.63	4801.49	8157.41	0.34
D100-00-00_0008	97644	10PCT_10yr	18570.00	35.12	60.14	50.91	60.90	0.000165	6.99	2779.06	1555.81	0.34
D100-00-00_0008	97644	2PCT_50yr	21759.00	35.12	61.93	52.01	62.72	0.000158	7.15	3704.80	4908.25	0.33
D100-00-00_0008	97644	1PCT_100yr	22969.00	35.12	62.45	52.37	63.26	0.000158	7.26	4136.68	6221.47	0.33
D100-00-00_0008	97644	0.2PCT_500yr	26556.00	35.12	63.73	53.42	64.59	0.000155	7.55	5510.30	8978.33	0.33
D100-00-00_0008	97626		Bridge									
D100-00-00_0008	97588	10PCT_10yr	18570.00	35.12	60.01		60.78	0.000169	7.05	2907.43	1536.18	0.34
D100-00-00_0008	97588	2PCT_50yr	21759.00	35.12	61.68		62.49	0.000164	7.25	3835.03	4054.39	0.34
D100-00-00_0008	97588	1PCT_100yr	22969.00	35.12	62.12		62.97	0.000168	7.41	4153.39	5072.91	0.34
D100-00-00_0008	97588	0.2PCT_500yr	26556.00	35.12	63.20		64.14	0.000179	7.86	5164.69	7925.46	0.36
D100-00-00_0008	97389	10PCT_10yr	18570.00	35.12	59.97		60.74	0.000170	7.07	2799.75	2020.34	0.34
D100-00-00_0008	97389	2PCT_50yr	21759.00	35.12	61.62		62.45	0.000168	7.33	3387.55	3884.10	0.34
D100-00-00_0008	97389	1PCT_100yr	22969.00	35.12	62.06		62.93	0.000172	7.48	3594.36	4454.02	0.35
D100-00-00_0008	97389	0.2PCT_500yr	26556.00	35.12	63.10		64.09	0.000187	8.01	4247.16	7298.76	0.36
D100-00-00_0008	97063	10PCT_10yr	18570.00	34.92	59.84		60.68	0.000171	7.37	3031.34	1946.86	0.34
D100-00-00_0008	97063	2PCT_50yr	21759.00	34.92	61.50		62.39	0.000168	7.62	3995.20	4789.44	0.34
D100-00-00_0008	97063	1PCT_100yr	22969.00	34.92	61.95		62.86	0.000171	7.77	4353.17	6004.50	0.35
D100-00-00_0008	97063	0.2PCT_500yr	26556.00	34.92	63.02		64.02	0.000176	8.22	5513.54	8316.17	0.36
D100-00-00_0008	96472	10PCT_10yr	18334.00	35.02	59.76		60.57	0.000171	7.34	2982.54	2985.94	0.34
D100-00-00_0008	96472	2PCT_50yr	21198.00	35.02	61.50		62.26	0.000146	7.22	4066.27	7226.50	0.32
D100-00-00_0008	96472	1PCT_100yr	22459.00	35.02	61.96		62.73	0.000144	7.33	4371.12	7840.37	0.32
D100-00-00_0008	96472	0.2PCT_500yr	26097.00	35.02	63.05		63.88	0.000146	7.71	5098.24	9403.97	0.33
D100-00-00_0008	95321	10PCT_10yr	18334.00	34.17	59.71		60.36	0.000126	6.68	3661.05	2983.63	0.30
D100-00-00_0008	95321	2PCT_50yr	21198.00	34.17	61.47		62.07	0.000105	6.58	4653.90	5265.44	0.28
D100-00-00_0008	95321	1PCT_100yr	22459.00	34.17	61.93		62.54	0.000105	6.69	4911.77	6415.18	0.28
D100-00-00_0008	95321	0.2PCT_500yr	26097.00	34.17	63.02		63.69	0.000110	7.10	5524.49	8561.62	0.29
D100-00-00_0008	95152	10PCT_10yr	18334.00	34.17	59.67	49.78	60.33	0.000128	6.73	3644.59	4891.54	0.30
D100-00-00_0008	95152	2PCT_50yr	21198.00	34.17	61.45	50.80	62.05	0.000105	6.55	4761.43	7786.10	0.28
D100-00-00_0008	95152	1PCT_100yr	22459.00	34.17	61.91	51.25	62.52	0.000104	6.65	5049.08	8938.01	0.28
D100-00-00_0008	95152	0.2PCT_500yr	26097.00	34.17	63.01	52.43	63.66	0.000107	7.02	5733.03	10872.48	0.29
D100-00-00_0008	95105		Bridge									
D100-00-00_0008	95058	10PCT_10yr	18334.00	34.17	59.07		59.86	0.000166	7.19	3069.32	3020.39	0.34
D100-00-00_0008	95058	2PCT_50yr	21198.00	34.17	61.09		61.75	0.000125	6.82	4318.93	6047.02	0.30
D100-00-00_0008	95058	1PCT_100yr	22459.00	34.17	61.65		62.31	0.000120	6.85	4667.31	7244.80	0.30
D100-00-00_0008	95058	0.2PCT_500yr	26097.00	34.17	62.77		63.47	0.000122	7.19	5361.94	10228.06	0.30
D100-00-00_0008	94893	10PCT_10yr	18334.00	34.17	59.03		59.83	0.000169	7.24	2966.10	2604.98	0.34
D100-00-00_0008	94893	2PCT_50yr	21198.00	34.17	61.03		61.72	0.000130	6.93	4083.13	5140.80	0.31
D100-00-00_0008	94893	1PCT_100yr	22459.00	34.17	61.59		62.28	0.000126	6.98	4394.13	6357.02	0.30
D100-00-00_0008	94893	0.2PCT_500yr	26097.00	34.17	62.69		63.44	0.000128	7.37	5010.70	8405.85	0.31

HEC-RAS Plan: Prop River: D100-00-00 Reach: D100-00-00_0008 (Continued)

Reach	River Sta	Profile	Q Total	Min Ch El	W.S. Elev	Crit W.S.	E.G. Elev	E.G. Slope	Vel Chnl	Flow Area	Top Width	Froude # Chl
			(cfs)	(ft)	(ft)	(ft)	(ft)	(ft/ft)	(ft/s)	(sq ft)	(ft)	
D100-00-00_0008	94312	10PCT_10yr	18334.00	33.74	58.95		59.73	0.000158	7.18	2947.61	3110.91	0.33
D100-00-00_0008	94312	2PCT_50yr	21198.00	33.74	60.95		61.65	0.000128	6.95	4010.08	5975.71	0.30
D100-00-00_0008	94312	1PCT_100yr	22459.00	33.74	61.50		62.21	0.000125	7.01	4314.77	6853.48	0.30
D100-00-00_0008	94312	0.2PCT_500yr	26097.00	33.74	62.60		63.36	0.000129	7.42	4914.73	8702.84	0.31
D100-00-00_0008	93846	10PCT_10yr	23064.00	33.40	58.25		59.58	0.000265	9.26	2524.43	1085.23	0.43
D100-00-00_0008	93846	2PCT_50yr	26530.00	33.40	60.26		61.51	0.000220	9.10	3582.60	3653.65	0.40
D100-00-00_0008	93846	1PCT_100yr	27682.00	33.40	60.87		62.08	0.000206	9.02	3991.51	4875.62	0.39
D100-00-00_0008	93846	0.2PCT_500yr	32325.00	33.40	61.86		63.22	0.000220	9.69	4662.34	8273.26	0.40
D100-00-00_0008	93397	10PCT_10yr	23064.00	32.26	58.37		59.38	0.000193	8.17	3429.38	1711.63	0.37
D100-00-00_0008	93397	2PCT_50yr	26530.00	32.26	60.46		61.31	0.000146	7.75	4876.34	5097.32	0.33
D100-00-00_0008	93397	1PCT_100yr	27682.00	32.26	61.07		61.89	0.000136	7.66	5298.72	6946.18	0.32
D100-00-00_0008	93397	0.2PCT_500yr	32325.00	32.26	62.10		63.01	0.000144	8.19	6014.71	9850.53	0.33
D100-00-00_0008	93213	10PCT_10yr	23064.00	32.26	58.36	49.34	59.32	0.000207	8.02	3483.28	1983.92	0.38
D100-00-00_0008	93213	2PCT_50yr	26530.00	32.26	60.45	50.44	61.26	0.000152	7.55	4895.32	6398.52	0.33
D100-00-00_0008	93213	1PCT_100yr	27682.00	32.26	61.06	50.79	61.84	0.000141	7.45	5306.34	8149.32	0.32
D100-00-00_0008	93213	0.2PCT_500yr	32325.00	32.26	62.09	52.15	62.96	0.000148	7.95	6001.98	11618.53	0.33
D100-00-00_0008	93199		Bridge									
D100-00-00_0008	93192	10PCT_10yr	23064.00	32.26	57.82		58.89	0.000242	8.39	3153.07	1199.38	0.41
D100-00-00_0008	93192	2PCT_50yr	26530.00	32.26	60.31		61.14	0.000157	7.58	4784.69	6383.33	0.34
D100-00-00_0008	93192	1PCT_100yr	27682.00	32.26	61.04		61.81	0.000141	7.41	5267.07	8304.16	0.32
D100-00-00_0008	93192	0.2PCT_500yr	32325.00	32.26	62.00		62.87	0.000151	7.95	5906.28	11626.00	0.34
D100-00-00_0008	92956	10PCT_10yr	23064.00	32.26	57.55		58.79	0.000250	8.94	2686.57	1204.47	0.42
D100-00-00_0008	92956	2PCT_50yr	26530.00	32.26	59.95		61.02	0.000185	8.47	3996.07	4985.16	0.37
D100-00-00_0008	92956	1PCT_100yr	27682.00	32.26	60.69		61.70	0.000167	8.29	4497.81	7673.75	0.35
D100-00-00_0008	92956	0.2PCT_500yr	32325.00	32.26	61.59		62.74	0.000184	8.98	5100.78	11068.89	0.37
D100-00-00_0008	92187	10PCT_10yr	23064.00	31.64	57.42		58.59	0.000216	8.71	2799.61	1245.83	0.39
D100-00-00_0008	92187	2PCT_50yr	26530.00	31.64	59.86		60.87	0.000160	8.26	4142.66	5849.87	0.34
D100-00-00_0008	92187	1PCT_100yr	27682.00	31.64	60.61		61.57	0.000145	8.11	4602.22	9531.37	0.33
D100-00-00_0008	92187	0.2PCT_500yr	32325.00	31.64	61.49		62.59	0.000162	8.82	5139.69	12435.75	0.35
D100-00-00_0008	91964	10PCT_10yr	23064.00	31.64	57.39	48.72	58.51	0.000248	8.53	2962.64	1511.23	0.41
D100-00-00_0008	91964	2PCT_50yr	26530.00	31.64	59.87	49.82	60.79	0.000172	7.88	4265.38	7297.59	0.35
D100-00-00_0008	91964	1PCT_100yr	27682.00	31.64	60.63	50.17	61.48	0.000154	7.70	4744.84	11041.69	0.34
D100-00-00_0008	91964	0.2PCT_500yr	32325.00	31.64	61.52	51.53	62.49	0.000168	8.33	5307.65	13313.05	0.35
D100-00-00_0008	91885		Bridge									
D100-00-00_0008	91807	10PCT_10yr	23064.00	31.64	56.69		57.97	0.000252	9.11	2720.57	986.04	0.42
D100-00-00_0008	91807	2PCT_50yr	26530.00	31.64	58.70		59.90	0.000205	8.95	3610.48	3477.97	0.39
D100-00-00_0008	91807	1PCT_100yr	27682.00	31.64	59.44		60.58	0.000186	8.79	4061.21	6053.14	0.37
D100-00-00_0008	91807	0.2PCT_500yr	32325.00	31.64	60.77		61.97	0.000184	9.18	4909.49	12402.25	0.37
D100-00-00_0008	91581	10PCT_10yr	23064.00	31.64	56.66		57.89	0.000247	9.01	3125.74	1105.74	0.41
D100-00-00_0008	91581	2PCT_50yr	26530.00	31.64	58.69		59.81	0.000195	8.74	4201.14	3709.12	0.38
D100-00-00_0008	91581	1PCT_100yr	27682.00	31.64	59.44		60.50	0.000177	8.57	4687.03	7865.81	0.36
D100-00-00_0008	91581	0.2PCT_500yr	32325.00	31.64	60.77		61.89	0.000176	8.96	5592.24	13261.06	0.36
D100-00-00_0008	91158	10PCT_10yr	23955.00	31.64	56.33		57.76	0.000292	9.65	2764.91	1151.19	0.45
D100-00-00_0008	91158	2PCT_50yr	28280.00	31.64	58.34		59.70	0.000242	9.59	3783.38	3185.63	0.42
D100-00-00_0008	91158	1PCT_100yr	29550.00	31.64	59.13		60.39	0.000216	9.35	4233.89	6365.85	0.40
D100-00-00_0008	91158	0.2PCT_500yr	33474.00	31.64	60.58		61.80	0.000195	9.37	5061.91	12380.03	0.38
D100-00-00_0008	90300	10PCT_10yr	23955.00	30.22	56.41		57.42	0.000212	8.31	3775.84	2636.87	0.38
D100-00-00_0008	90300	2PCT_50yr	28280.00	30.22	58.51		59.38	0.000163	7.98	5435.01	6584.93	0.35
D100-00-00_0008	90300	1PCT_100yr	29550.00	30.22	59.30		60.10	0.000144	7.74	6096.87	9085.08	0.33
D100-00-00_0008	90300	0.2PCT_500yr	33474.00	30.22	60.77		61.52	0.000128	7.71	7319.10	14778.70	0.31
D100-00-00_0008	90129	10PCT_10yr	23955.00	30.22	55.91	47.86	57.28	0.000263	9.38	2678.14	3083.73	0.43
D100-00-00_0008	90129	2PCT_50yr	28280.00	30.22	57.89	49.29	59.21	0.000224	9.41	3926.20	5708.03	0.40
D100-00-00_0008	90129	1PCT_100yr	29550.00	30.22	58.73	49.67	59.95	0.000198	9.14	4487.44	9949.27	0.38
D100-00-00_0008	90129	0.2PCT_500yr	33474.00	30.22	60.22	50.75	61.38	0.000178	9.12	5482.19	15578.77	0.37
D100-00-00_0008	90082		Bridge									
D100-00-00_0008	90035	10PCT_10yr	23955.00	30.22	55.65		57.07	0.000279	9.55	2571.96	2143.41	0.44
D100-00-00_0008	90035	2PCT_50yr	28280.00	30.22	57.17		58.70	0.000270	10.02	3401.06	5019.14	0.44
D100-00-00_0008	90035	1PCT_100yr	29550.00	30.22	57.88		59.34	0.000246	9.85	3861.78	6842.96	0.42
D100-00-00_0008	90035	0.2PCT_500yr	33474.00	30.22	59.32		60.72	0.000221	9.87	4789.05	11215.49	0.41
D100-00-00_0008	89871	10PCT_10yr	23955.00	30.22	55.68		56.95	0.000307	9.05	2869.82	1846.61	0.45
D100-00-00_0008	89871	2PCT_50yr	28280.00	30.22	57.27		58.52	0.000268	9.16	3841.14	4311.38	0.43
D100-00-00_0008	89871	1PCT_100yr	29550.00	30.22	57.99		59.15	0.000237	8.92	4303.06	5971.86	0.41
D100-00-00_0008	89871	0.2PCT_500yr	33474.00	30.22	59.44		60.53	0.000205	8.82	5228.35	10256.24	0.39

HEC-RAS Plan: Prop River: D100-00-00 Reach: D100-00-00_0008 (Continued)

Reach	River Sta	Profile	Q Total	Min Ch El	W.S. Elev	Crit W.S.	E.G. Elev	E.G. Slope	Vel Chnl	Flow Area	Top Width	Froude # Chl
			(cfs)	(ft)	(ft)	(ft)	(ft)	(ft/ft)	(ft/s)	(sq ft)	(ft)	
D100-00-00_0008	89051	10PCT_10yr	23955.00	30.13	55.37		56.70	0.000274	9.38	3132.40	2120.86	0.44
D100-00-00_0008	89051	2PCT_50yr	28280.00	30.13	57.06		58.31	0.000238	9.34	4322.95	5647.41	0.41
D100-00-00_0008	89051	1PCT_100yr	29550.00	30.13	57.82		58.96	0.000210	9.05	4860.78	7326.37	0.39
D100-00-00_0008	89051	0.2PCT_500yr	33474.00	30.13	59.31		60.36	0.000182	8.92	5912.33	11352.60	0.37
D100-00-00_0008	87656	10PCT_10yr	24837.00	29.34	55.18		56.29	0.000227	8.73	3883.81	1812.06	0.40
D100-00-00_0008	87656	2PCT_50yr	30057.00	29.34	56.87		57.95	0.000206	8.91	5031.27	5031.74	0.39
D100-00-00_0008	87656	1PCT_100yr	31449.00	29.34	57.65		58.65	0.000182	8.64	5565.29	7506.86	0.37
D100-00-00_0008	87656	0.2PCT_500yr	34608.00	29.34	59.21		60.08	0.000148	8.26	6625.07	13518.43	0.34
D100-00-00_0008	86813	10PCT_10yr	24837.00	28.88	54.76		56.06	0.000263	9.25	3193.79	1523.37	0.43
D100-00-00_0008	86813	2PCT_50yr	30057.00	28.88	56.39		57.74	0.000249	9.64	4314.95	5890.51	0.42
D100-00-00_0008	86813	1PCT_100yr	31449.00	28.88	57.23		58.46	0.000218	9.33	4922.36	7804.21	0.40
D100-00-00_0008	86813	0.2PCT_500yr	34608.00	28.88	58.87		59.92	0.000174	8.86	6115.45	15003.99	0.36
D100-00-00_0008	86516	10PCT_10yr	24837.00	28.88	54.74	46.47	55.94	0.000221	9.02	3785.50	1837.62	0.40
D100-00-00_0008	86516	2PCT_50yr	30057.00	28.88	56.37	48.07	57.61	0.000213	9.42	4908.11	6652.46	0.39
D100-00-00_0008	86516	1PCT_100yr	31449.00	28.88	57.21	48.45	58.35	0.000189	9.17	5485.34	9423.10	0.38
D100-00-00_0008	86516	0.2PCT_500yr	34608.00	28.88	58.84	49.31	59.85	0.000156	8.81	6617.07	16513.44	0.35
D100-00-00_0008	86508		Bridge									
D100-00-00_0008	86501	10PCT_10yr	24837.00	28.88	54.72		55.89	0.000219	8.97	3847.07	1867.12	0.39
D100-00-00_0008	86501	2PCT_50yr	30057.00	28.88	56.19		57.44	0.000218	9.48	4974.70	6017.20	0.40
D100-00-00_0008	86501	1PCT_100yr	31449.00	28.88	57.00		58.14	0.000193	9.19	5612.91	8721.72	0.38
D100-00-00_0008	86501	0.2PCT_500yr	34608.00	28.88	58.50		59.51	0.000161	8.85	6793.55	15330.72	0.35
D100-00-00_0008	86325	10PCT_10yr	24837.00	28.88	54.69		55.83	0.000236	8.85	3954.74	1890.03	0.41
D100-00-00_0008	86325	2PCT_50yr	30057.00	28.88	56.19		57.36	0.000223	9.17	5170.38	6641.44	0.40
D100-00-00_0008	86325	1PCT_100yr	31449.00	28.88	57.01		58.06	0.000195	8.86	5831.79	9996.71	0.38
D100-00-00_0008	86325	0.2PCT_500yr	34608.00	28.88	58.52		59.44	0.000160	8.49	7051.58	17273.24	0.35
D100-00-00_0008	85870	10PCT_10yr	24837.00	27.65	54.71		55.68	0.000205	8.23	4444.14	3175.57	0.38
D100-00-00_0008	85870	2PCT_50yr	30057.00	27.65	56.20		57.22	0.000198	8.60	5609.88	9535.37	0.38
D100-00-00_0008	85870	1PCT_100yr	31449.00	27.65	57.01		57.95	0.000175	8.36	6241.62	12467.42	0.36
D100-00-00_0008	85870	0.2PCT_500yr	34608.00	27.65	58.50		59.35	0.000146	8.09	7408.99	17790.73	0.33
D100-00-00_0008	84732	10PCT_10yr	24837.00	27.58	54.55		55.45	0.000173	7.85	4212.13	8002.38	0.35
D100-00-00_0008	84732	2PCT_50yr	30057.00	27.58	56.02		57.00	0.000173	8.33	5128.86	16093.12	0.36
D100-00-00_0008	84732	1PCT_100yr	31449.00	27.58	56.84		57.75	0.000155	8.13	5640.19	20787.82	0.34
D100-00-00_0008	84732	0.2PCT_500yr	34608.00	27.58	58.35		59.19	0.000132	7.94	6579.94	23547.97	0.32
D100-00-00_0008	84532	10PCT_10yr	24837.00	27.58	54.52		55.41	0.000175	7.85	4331.75	11036.00	0.35
D100-00-00_0008	84532	2PCT_50yr	30057.00	27.58	55.99		56.96	0.000174	8.32	5223.22	18630.50	0.36
D100-00-00_0008	84532	1PCT_100yr	31449.00	27.58	56.82		57.71	0.000155	8.11	5721.92	21978.93	0.34
D100-00-00_0008	84532	0.2PCT_500yr	34608.00	27.58	58.33		59.16	0.000133	7.92	6636.74	24683.40	0.32
D100-00-00_0008	84469	10PCT_10yr	24837.00	27.58	54.52	45.20	55.39	0.000173	7.79	4575.45	13533.82	0.35
D100-00-00_0008	84469	2PCT_50yr	30057.00	27.58	55.99	46.82	56.93	0.000172	8.26	5501.41	18546.44	0.35
D100-00-00_0008	84469	1PCT_100yr	31449.00	27.58	56.82	47.24	57.69	0.000153	8.06	6019.55	21738.30	0.34
D100-00-00_0008	84469	0.2PCT_500yr	34608.00	27.58	58.33	48.14	59.14	0.000131	7.86	6969.80	24663.07	0.32
D100-00-00_0008	84448		Bridge									
D100-00-00_0008	84427	10PCT_10yr	24837.00	27.58	53.89	45.20	55.00	0.000221	8.57	3564.04	14606.24	0.39
D100-00-00_0008	84427	2PCT_50yr	30057.00	27.58	55.52	46.77	56.64	0.000203	8.83	4811.61	19599.55	0.38
D100-00-00_0008	84427	1PCT_100yr	31449.00	27.58	56.51	47.16	57.48	0.000170	8.39	5568.21	22640.57	0.35
D100-00-00_0008	84427	0.2PCT_500yr	34608.00	27.58	58.06	47.96	58.91	0.000138	8.01	6755.31	24014.79	0.32
D100-00-00_0008	84400		Bridge									
D100-00-00_0008	84374	10PCT_10yr	24837.00	26.85	53.13		54.37	0.000245	9.01	3344.25	7765.53	0.41
D100-00-00_0008	84374	2PCT_50yr	30057.00	26.85	55.10		56.32	0.000215	9.18	4502.86	17536.83	0.39
D100-00-00_0008	84374	1PCT_100yr	31449.00	26.85	56.23		57.30	0.000179	8.74	5167.19	19287.10	0.36
D100-00-00_0008	84374	0.2PCT_500yr	34608.00	26.85	57.61		58.63	0.000158	8.62	5984.28	23067.96	0.35
D100-00-00_0008	84315	10PCT_10yr	25294.00	26.85	53.01		54.33	0.000263	9.30	3160.66	5926.32	0.43
D100-00-00_0008	84315	2PCT_50yr	31219.00	26.85	54.88		56.26	0.000246	9.73	4290.08	15523.59	0.42
D100-00-00_0008	84315	1PCT_100yr	32975.00	26.85	56.01		57.25	0.000207	9.33	4975.46	17978.06	0.39
D100-00-00_0008	84315	0.2PCT_500yr	37060.00	26.85	57.34		58.56	0.000191	9.41	5778.35	21724.22	0.38
D100-00-00_0008	84147	10PCT_10yr	25294.00	26.85	52.97		54.28	0.000280	9.26	3104.94	2817.30	0.44
D100-00-00_0008	84147	2PCT_50yr	31219.00	26.85	54.85		56.21	0.000256	9.64	4242.64	12313.90	0.43
D100-00-00_0008	84147	1PCT_100yr	32975.00	26.85	56.01		57.20	0.000210	9.15	5022.54	17118.59	0.39
D100-00-00_0008	84147	0.2PCT_500yr	37060.00	26.85	57.37		58.50	0.000189	9.13	5930.84	20423.64	0.38
D100-00-00_0008	83257	10PCT_10yr	25294.00	26.31	52.89		54.00	0.000215	8.62	3608.83	3934.62	0.39
D100-00-00_0008	83257	2PCT_50yr	31219.00	26.31	54.79		55.95	0.000199	8.98	4798.20	14759.39	0.38
D100-00-00_0008	83257	1PCT_100yr	32975.00	26.31	55.95		56.98	0.000168	8.60	5523.31	18242.86	0.36
D100-00-00_0008	83257	0.2PCT_500yr	37060.00	26.31	57.30		58.31	0.000156	8.70	6360.87	21046.75	0.35

HEC-RAS Plan: Prop River: D100-00-00 Reach: D100-00-00_0008 (Continued)

Reach	River Sta	Profile	Q Total	Min Ch El	W.S. Elev	Crit W.S.	E.G. Elev	E.G. Slope	Vel Chnl	Flow Area	Top Width	Froude # Chl
			(cfs)	(ft)	(ft)	(ft)	(ft)	(ft/ft)	(ft/s)	(sq ft)	(ft)	
D100-00-00_0008	82292	10PCT_10yr	25294.00	26.24	52.50		53.76	0.000246	9.16	3339.64	4529.57	0.42
D100-00-00_0008	82292	2PCT_50yr	31219.00	26.24	54.41		55.72	0.000228	9.56	4544.79	16221.17	0.41
D100-00-00_0008	82292	1PCT_100yr	32975.00	26.24	55.66		56.80	0.000186	9.05	5370.63	19780.22	0.37
D100-00-00_0008	82292	0.2PCT_500yr	37060.00	26.24	57.05		58.15	0.000170	9.07	6281.15	21794.38	0.36
D100-00-00_0008	81768	10PCT_10yr	24395.00	25.72	52.67		53.52	0.000204	7.68	4341.29	6523.88	0.37
D100-00-00_0008	81768	2PCT_50yr	29368.00	25.72	54.67		55.47	0.000165	7.60	5709.59	17909.13	0.34
D100-00-00_0008	81768	1PCT_100yr	30973.00	25.72	55.89		56.59	0.000133	7.19	6544.30	19953.15	0.31
D100-00-00_0008	81768	0.2PCT_500yr	34591.00	25.72	57.27		57.95	0.000119	7.17	7488.42	22051.53	0.30
D100-00-00_0008	81600	10PCT_10yr	24395.00	25.72	52.56	43.44	53.48	0.000176	7.96	4326.45	8628.72	0.35
D100-00-00_0008	81600	2PCT_50yr	29368.00	25.72	54.56	44.94	55.42	0.000150	7.96	5649.88	18386.17	0.33
D100-00-00_0008	81600	1PCT_100yr	30973.00	25.72	55.80	45.40	56.55	0.000124	7.56	6469.20	21435.10	0.31
D100-00-00_0008	81600	0.2PCT_500yr	34591.00	25.72	57.19	46.37	57.91	0.000113	7.56	7387.40	21887.29	0.30
D100-00-00_0008	81504		Bridge									
D100-00-00_0008	81408	10PCT_10yr	24395.00	25.72	51.80		52.96	0.000228	8.78	3621.89	5040.71	0.40
D100-00-00_0008	81408	2PCT_50yr	29368.00	25.72	53.97		54.99	0.000183	8.59	5092.78	14270.73	0.37
D100-00-00_0008	81408	1PCT_100yr	30973.00	25.72	55.40		56.25	0.000141	7.97	6070.56	19104.94	0.33
D100-00-00_0008	81408	0.2PCT_500yr	34591.00	25.72	56.81		57.61	0.000126	7.92	7027.05	21222.00	0.31
D100-00-00_0008	81251	10PCT_10yr	24395.00	25.72	51.63		52.89	0.000242	9.09	3183.72	3808.90	0.41
D100-00-00_0008	81251	2PCT_50yr	29368.00	25.72	53.71		54.91	0.000205	9.12	4538.16	13208.07	0.39
D100-00-00_0008	81251	1PCT_100yr	30973.00	25.72	55.19		56.18	0.000158	8.46	5525.37	18394.18	0.34
D100-00-00_0008	81251	0.2PCT_500yr	34591.00	25.72	56.60		57.55	0.000142	8.43	6466.33	20996.60	0.33
D100-00-00_0008	80787	10PCT_10yr	24395.00	25.49	51.58		52.75	0.000232	8.84	3555.51	3346.44	0.40
D100-00-00_0008	80787	2PCT_50yr	29368.00	25.49	53.70		54.78	0.000192	8.77	4921.29	13125.39	0.37
D100-00-00_0008	80787	1PCT_100yr	30973.00	25.49	55.19		56.08	0.000148	8.15	5885.12	18930.66	0.33
D100-00-00_0008	80787	0.2PCT_500yr	34591.00	25.49	56.60		57.46	0.000134	8.13	6800.71	21185.61	0.32
D100-00-00_0008	80203	10PCT_10yr	24395.00	25.17	51.40		52.61	0.000231	8.91	3211.90	4342.17	0.40
D100-00-00_0008	80203	2PCT_50yr	29368.00	25.17	53.49		54.66	0.000197	8.96	4342.13	13147.24	0.38
D100-00-00_0008	80203	1PCT_100yr	30973.00	25.17	55.00		55.98	0.000154	8.37	5158.81	19108.03	0.34
D100-00-00_0008	80203	0.2PCT_500yr	34591.00	25.17	56.40		57.36	0.000141	8.41	5918.57	21185.37	0.33
D100-00-00_0008	79216	10PCT_10yr	23525.00	24.45	51.49		52.30	0.000162	7.58	4845.40	5732.17	0.34
D100-00-00_0008	79216	2PCT_50yr	27623.00	24.45	53.65		54.36	0.000128	7.34	6355.71	17256.21	0.31
D100-00-00_0008	79216	1PCT_100yr	29090.00	24.45	55.14		55.74	0.000100	6.85	7400.24	20628.15	0.28
D100-00-00_0008	79216	0.2PCT_500yr	32283.00	24.45	56.56		57.14	0.000091	6.84	8388.29	21366.78	0.27
D100-00-00_0008	78674	10PCT_10yr	23525.00	24.06	51.35	41.41	52.20	0.000162	7.66	4321.03	9004.43	0.34
D100-00-00_0008	78674	2PCT_50yr	27623.00	24.06	53.59	42.68	54.28	0.000120	7.20	6015.15	17663.73	0.30
D100-00-00_0008	78674	1PCT_100yr	29090.00	24.06	55.12	43.11	55.67	0.000091	6.61	7163.75	19475.01	0.26
D100-00-00_0008	78674	0.2PCT_500yr	32283.00	24.06	56.54	44.02	57.06	0.000080	6.51	8242.15	21457.52	0.25
D100-00-00_0008	78652		Bridge									
D100-00-00_0008	78631	10PCT_10yr	23525.00	24.06	51.06		52.01	0.000181	8.00	3867.44	6249.63	0.36
D100-00-00_0008	78631	2PCT_50yr	27623.00	24.06	53.30		54.08	0.000135	7.56	5470.48	16609.09	0.32
D100-00-00_0008	78631	1PCT_100yr	29090.00	24.06	54.84		55.47	0.000102	6.93	6574.34	18878.59	0.28
D100-00-00_0008	78631	0.2PCT_500yr	32283.00	24.06	56.28		56.86	0.000090	6.83	7597.51	21078.69	0.26
D100-00-00_0008	78563	10PCT_10yr	23525.00	24.06	51.00	41.40	51.98	0.000188	8.12	3671.85	2357.93	0.36
D100-00-00_0008	78563	2PCT_50yr	27623.00	24.06	53.23	42.68	54.06	0.000142	7.73	5251.23	9859.64	0.32
D100-00-00_0008	78563	1PCT_100yr	29090.00	24.06	54.78	43.11	55.45	0.000107	7.09	6381.37	16535.71	0.28
D100-00-00_0008	78563	0.2PCT_500yr	32283.00	24.06	56.22	44.02	56.84	0.000095	7.00	7453.96	19312.18	0.27
D100-00-00_0008	78540		Bridge									
D100-00-00_0008	78518	10PCT_10yr	23525.00	23.83	49.67		50.64	0.000185	8.00	3493.68	1029.34	0.36
D100-00-00_0008	78518	2PCT_50yr	27623.00	23.83	51.98		52.80	0.000145	7.58	5169.97	5164.22	0.33
D100-00-00_0008	78518	1PCT_100yr	29090.00	23.83	53.56		54.21	0.000107	6.92	6366.82	10927.42	0.28
D100-00-00_0008	78518	0.2PCT_500yr	32283.00	23.83	55.00		55.60	0.000094	6.80	7476.27	17990.78	0.27
D100-00-00_0008	78493	10PCT_10yr	23525.00	23.83	49.67	40.16	50.64	0.000182	8.01	3517.55	1031.08	0.36
D100-00-00_0008	78493	2PCT_50yr	27623.00	23.83	51.97	41.44	52.79	0.000138	7.60	5227.12	5481.67	0.32
D100-00-00_0008	78493	1PCT_100yr	29090.00	23.83	53.56	41.86	54.20	0.000103	6.95	6421.95	11810.72	0.28
D100-00-00_0008	78493	0.2PCT_500yr	32283.00	23.83	54.99	42.74	55.59	0.000091	6.84	7515.69	17821.16	0.27
D100-00-00_0008	78463		Bridge									
D100-00-00_0008	78440	10PCT_10yr	23525.00	23.83	49.50		50.49	0.000188	8.08	3368.93	975.24	0.36
D100-00-00_0008	78440	2PCT_50yr	27623.00	23.83	51.90		52.73	0.000141	7.64	5185.29	7126.77	0.32
D100-00-00_0008	78440	1PCT_100yr	29090.00	23.83	53.50		54.15	0.000104	6.97	6427.18	15324.00	0.28
D100-00-00_0008	78440	0.2PCT_500yr	32283.00	23.83	54.93		55.53	0.000091	6.84	7542.16	18505.21	0.27
D100-00-00_0008	78396	10PCT_10yr	23525.00	23.83	49.48	40.16	50.48	0.000192	8.13	3335.37	1768.27	0.37
D100-00-00_0008	78396	2PCT_50yr	27623.00	23.83	51.90	41.44	52.72	0.000145	7.64	5251.81	9826.80	0.33

HEC-RAS Plan: Prop River: D100-00-00 Reach: D100-00-00_0008 (Continued)

Reach	River Sta	Profile	Q Total	Min Ch El	W.S. Elev	Crit W.S.	E.G. Elev	E.G. Slope	Vel Chnl	Flow Area	Top Width	Froude # Chl
			(cfs)	(ft)	(ft)	(ft)	(ft)	(ft/ft)	(ft/s)	(sq ft)	(ft)	
D100-00-00_0008	78396	1PCT_100yr	29090.00	23.83	53.50	41.86	54.14	0.000105	6.90	6626.80	16034.59	0.28
D100-00-00_0008	78396	0.2PCT_500yr	32283.00	23.83	54.94	42.74	55.51	0.000091	6.74	7860.51	18678.27	0.26
D100-00-00_0008	78365		Bridge									
D100-00-00_0008	78334	10PCT_10yr	23525.00	23.83	49.31	40.16	50.35	0.000198	8.25	3354.09	2246.71	0.37
D100-00-00_0008	78334	2PCT_50yr	27623.00	23.83	51.83	41.44	52.63	0.000139	7.59	5541.11	7050.42	0.32
D100-00-00_0008	78334	1PCT_100yr	29090.00	23.83	53.45	41.86	54.05	0.000099	6.80	7038.07	15982.02	0.27
D100-00-00_0008	78334	0.2PCT_500yr	32283.00	23.83	54.83	42.73	55.37	0.000086	6.64	8313.98	19468.15	0.26
D100-00-00_0008	78311		Bridge									
D100-00-00_0008	78288	10PCT_10yr	23525.00	23.83	49.07	40.16	50.16	0.000210	8.43	3186.90	1869.60	0.38
D100-00-00_0008	78288	2PCT_50yr	27623.00	23.83	51.59	41.44	52.45	0.000150	7.81	5140.21	5595.95	0.33
D100-00-00_0008	78288	1PCT_100yr	29090.00	23.83	53.22	41.86	53.88	0.000109	7.05	6552.67	14507.86	0.29
D100-00-00_0008	78288	0.2PCT_500yr	32283.00	23.83	54.55	42.73	55.17	0.000097	6.97	7759.32	19178.46	0.27
D100-00-00_0008	78258		Bridge									
D100-00-00_0008	78228	10PCT_10yr	23525.00	23.76	48.85		49.97	0.000278	8.53	3009.25	1136.55	0.43
D100-00-00_0008	78228	2PCT_50yr	27623.00	23.76	51.48		52.26	0.000174	7.42	5349.94	4768.39	0.35
D100-00-00_0008	78228	1PCT_100yr	29090.00	23.76	53.17		53.73	0.000114	6.49	6919.54	14428.51	0.29
D100-00-00_0008	78228	0.2PCT_500yr	32283.00	23.76	54.53		55.03	0.000096	6.29	8183.68	19081.70	0.27
D100-00-00_0008	78126	10PCT_10yr	23525.00	23.76	48.66		49.90	0.000280	8.97	2779.54	664.46	0.44
D100-00-00_0008	78126	2PCT_50yr	27623.00	23.76	51.33		52.21	0.000195	7.89	5181.76	4678.95	0.37
D100-00-00_0008	78126	1PCT_100yr	29090.00	23.76	53.11		53.71	0.000121	6.74	7077.74	14614.18	0.30
D100-00-00_0008	78126	0.2PCT_500yr	32283.00	23.76	54.51		55.02	0.000099	6.44	8554.87	18301.57	0.27
D100-00-00_0008	77983	10PCT_10yr	23525.00	23.76	48.57		49.86	0.000260	9.13	2780.02	717.13	0.42
D100-00-00_0008	77983	2PCT_50yr	27623.00	23.76	51.02		52.16	0.000201	8.75	5038.53	4465.14	0.38
D100-00-00_0008	77983	1PCT_100yr	29090.00	23.76	52.79		53.66	0.000141	7.85	6980.03	13212.11	0.32
D100-00-00_0008	77983	0.2PCT_500yr	32283.00	23.76	54.17		54.97	0.000124	7.74	8478.66	17540.48	0.31
D100-00-00_0008	77323	10PCT_10yr	22901.00	23.55	48.49		49.66	0.000232	8.70	2920.53	969.93	0.40
D100-00-00_0008	77323	2PCT_50yr	26396.00	23.55	51.04		51.98	0.000164	8.03	5311.11	4878.26	0.35
D100-00-00_0008	77323	1PCT_100yr	27767.00	23.55	52.82		53.53	0.000115	7.20	7485.93	14706.24	0.29
D100-00-00_0008	77323	0.2PCT_500yr	30670.00	23.55	54.20		54.85	0.000101	7.06	9258.60	18607.74	0.28
D100-00-00_0008	76284	10PCT_10yr	22901.00	23.18	48.31		49.40	0.000220	8.45	3655.45	1656.07	0.39
D100-00-00_0008	76284	2PCT_50yr	26396.00	23.18	50.98		51.78	0.000142	7.55	7228.82	7301.97	0.32
D100-00-00_0008	76284	1PCT_100yr	27767.00	23.18	52.80		53.38	0.000097	6.68	9776.36	15903.33	0.27
D100-00-00_0008	76284	0.2PCT_500yr	30670.00	23.18	54.19		54.72	0.000084	6.53	11722.71	18498.65	0.26
D100-00-00_0008	76075	10PCT_10yr	22901.00	22.97	48.20		49.35	0.000225	8.63	2683.50	696.44	0.40
D100-00-00_0008	76075	2PCT_50yr	26396.00	22.97	50.72		51.72	0.000173	8.18	5109.02	7604.92	0.35
D100-00-00_0008	76075	1PCT_100yr	27767.00	22.97	52.57		53.34	0.000121	7.34	7399.72	15033.54	0.30
D100-00-00_0008	76075	0.2PCT_500yr	30670.00	22.97	53.97		54.68	0.000107	7.24	9118.33	17455.40	0.29
D100-00-00_0008	75709	10PCT_10yr	22381.00	22.49	48.22		49.23	0.000215	8.04	2783.98	1046.35	0.38
D100-00-00_0008	75709	2PCT_50yr	25393.00	22.49	50.75		51.62	0.000165	7.55	3639.92	6463.56	0.34
D100-00-00_0008	75709	1PCT_100yr	26686.00	22.49	52.56		53.29	0.000119	6.93	4518.58	14192.97	0.30
D100-00-00_0008	75709	0.2PCT_500yr	29359.00	22.49	53.94		54.64	0.000106	6.90	5285.36	18139.79	0.28
D100-00-00_0008	75383	10PCT_10yr	22381.00	22.49	48.18	38.76	49.12	0.000209	7.79	2922.55	1548.78	0.38
D100-00-00_0008	75383	2PCT_50yr	25393.00	22.49	50.76	39.80	51.51	0.000152	7.05	4387.44	6665.67	0.33
D100-00-00_0008	75383	1PCT_100yr	26686.00	22.49	52.61	40.17	53.16	0.000100	6.20	5948.02	13600.06	0.27
D100-00-00_0008	75383	0.2PCT_500yr	29359.00	22.49	54.01	41.02	54.51	0.000084	6.01	7129.24	18184.36	0.25
D100-00-00_0008	75295		Bridge									
D100-00-00_0008	75208	10PCT_10yr	22381.00	22.49	47.99		48.83	0.000220	7.45	3428.34	1589.16	0.38
D100-00-00_0008	75208	2PCT_50yr	25393.00	22.49	50.37		51.01	0.000149	6.68	4713.85	5975.27	0.32
D100-00-00_0008	75208	1PCT_100yr	26686.00	22.49	52.30		52.78	0.000096	5.86	6096.10	13229.60	0.26
D100-00-00_0008	75208	0.2PCT_500yr	29359.00	22.49	53.83		54.26	0.000079	5.66	7190.35	18518.96	0.24
D100-00-00_0008	75002	10PCT_10yr	22381.00	22.49	47.73		48.73	0.000219	8.04	2793.64	1322.02	0.39
D100-00-00_0008	75002	2PCT_50yr	25393.00	22.49	49.96		50.89	0.000168	7.77	3439.74	4893.08	0.35
D100-00-00_0008	75002	1PCT_100yr	26686.00	22.49	51.89		52.66	0.000122	7.15	4273.57	10075.35	0.30
D100-00-00_0008	75002	0.2PCT_500yr	29359.00	22.49	53.39		54.14	0.000108	7.11	5011.94	15382.10	0.29
D100-00-00_0008	74085	10PCT_10yr	22381.00	21.89	47.50		48.54	0.000197	8.17	2740.68	423.25	0.37
D100-00-00_0008	74085	2PCT_50yr	25393.00	21.89	49.79		50.74	0.000156	7.90	3697.49	6522.71	0.34
D100-00-00_0008	74085	1PCT_100yr	26686.00	21.89	51.80		52.55	0.000110	7.15	4971.10	11002.55	0.29
D100-00-00_0008	74085	0.2PCT_500yr	29359.00	21.89	53.33		54.03	0.000097	7.04	5960.87	17005.01	0.27
D100-00-00_0008	73862	10PCT_10yr	22381.00	21.54	47.61	37.60	48.35	0.000133	6.89	3250.41	216.81	0.31
D100-00-00_0008	73862	2PCT_50yr	25393.00	21.54	49.88	38.39	50.60	0.000109	6.82	3723.24	441.42	0.28
D100-00-00_0008	73862	1PCT_100yr	26686.00	21.54	51.83	38.72	52.48	0.000085	6.46	4130.95	7688.57	0.26
D100-00-00_0008	73862	0.2PCT_500yr	29359.00	21.54	53.32	39.37	54.00	0.000081	6.61	4443.18	13161.24	0.25

HEC-RAS Plan: Prop River: D100-00-00 Reach: D100-00-00_0008 (Continued)

Reach	River Sta	Profile	Q Total	Min Ch El	W.S. Elev	Crit W.S.	E.G. Elev	E.G. Slope	Vel Chnl	Flow Area	Top Width	Froude # Chl
			(cfs)	(ft)	(ft)	(ft)	(ft)	(ft/ft)	(ft/s)	(sq ft)	(ft)	
D100-00-00_0008	73836		Bridge									
D100-00-00_0008	73817	10PCT_10yr	22381.00	21.29	47.25		48.21	0.000181	7.86	2849.00	189.24	0.36
D100-00-00_0008	73817	2PCT_50yr	25393.00	21.29	49.54		50.46	0.000157	7.70	3298.82	274.92	0.34
D100-00-00_0008	73817	1PCT_100yr	26686.00	21.29	51.36		52.18	0.000125	7.26	3677.90	7081.98	0.30
D100-00-00_0008	73817	0.2PCT_500yr	29359.00	21.29	52.68		53.54	0.000119	7.42	3954.69	15314.41	0.30
D100-00-00_0008	73738	10PCT_10yr	26114.00	21.29	46.64		48.06	0.000275	9.55	2733.72	185.75	0.44
D100-00-00_0008	73738	2PCT_50yr	29396.00	21.29	49.02		50.33	0.000222	9.19	3353.70	1743.70	0.40
D100-00-00_0008	73738	1PCT_100yr	31702.00	21.29	50.92		52.07	0.000172	8.69	4188.33	6275.15	0.36
D100-00-00_0008	73738	0.2PCT_500yr	35991.00	21.29	52.19		53.42	0.000171	9.05	4768.86	13859.77	0.36
D100-00-00_0008	73591	10PCT_10yr	26114.00	21.29	46.61		48.01	0.000289	9.47	2757.21	197.80	0.45
D100-00-00_0008	73591	2PCT_50yr	29396.00	21.29	49.03		50.28	0.000223	8.97	3468.76	1698.52	0.40
D100-00-00_0008	73591	1PCT_100yr	31702.00	21.29	50.96		52.01	0.000167	8.38	4563.24	8597.83	0.35
D100-00-00_0008	73591	0.2PCT_500yr	35991.00	21.29	52.27		53.35	0.000160	8.61	5366.68	14826.49	0.35
D100-00-00_0008	73154	10PCT_10yr	26114.00	20.93	46.42		47.88	0.000278	9.68	2701.11	204.41	0.44
D100-00-00_0008	73154	2PCT_50yr	29396.00	20.93	48.83		50.17	0.000219	9.31	3324.64	2121.05	0.40
D100-00-00_0008	73154	1PCT_100yr	31702.00	20.93	50.77		51.93	0.000168	8.78	4487.21	8731.17	0.36
D100-00-00_0008	73154	0.2PCT_500yr	35991.00	20.93	52.08		53.27	0.000162	9.02	5461.72	14261.66	0.35
D100-00-00_0008	72530	10PCT_10yr	26114.00	20.36	46.33		47.68	0.000249	9.30	2810.50	265.69	0.42
D100-00-00_0008	72530	2PCT_50yr	29396.00	20.36	48.79		50.01	0.000193	8.90	3664.82	3159.90	0.38
D100-00-00_0008	72530	1PCT_100yr	31702.00	20.36	50.76		51.79	0.000147	8.33	4806.59	10093.88	0.33
D100-00-00_0008	72530	0.2PCT_500yr	35991.00	20.36	52.08		53.14	0.000143	8.59	5614.41	14899.83	0.33
D100-00-00_0008	71311	10PCT_10yr	26114.00	19.02	46.18		47.36	0.000200	8.73	3165.62	686.52	0.38
D100-00-00_0008	71311	2PCT_50yr	29396.00	19.02	48.70		49.75	0.000151	8.33	4884.11	3996.97	0.34
D100-00-00_0008	71311	1PCT_100yr	31702.00	19.02	50.71		51.59	0.000115	7.79	6702.09	10731.69	0.30
D100-00-00_0008	71311	0.2PCT_500yr	35991.00	19.02	52.03		52.94	0.000114	8.06	7891.59	15047.89	0.30
D100-00-00_0008	71113	10PCT_10yr	26114.00	19.02	46.13	36.64	47.32	0.000203	8.76	3122.84	613.94	0.38
D100-00-00_0008	71113	2PCT_50yr	29396.00	19.02	48.67	37.65	49.71	0.000150	8.31	4784.71	3945.87	0.34
D100-00-00_0008	71113	1PCT_100yr	31702.00	19.02	50.70	38.28	51.56	0.000113	7.72	6568.01	10701.34	0.30
D100-00-00_0008	71113	0.2PCT_500yr	35991.00	19.02	52.02	39.42	52.90	0.000111	7.96	7732.26	15024.27	0.30
D100-00-00_0008	71063		Bridge									
D100-00-00_0008	71014	10PCT_10yr	26114.00	19.02	45.49		46.79	0.000232	9.12	2920.73	319.29	0.41
D100-00-00_0008	71014	2PCT_50yr	29396.00	19.02	47.55		48.78	0.000190	8.96	4025.93	2300.25	0.37
D100-00-00_0008	71014	1PCT_100yr	31702.00	19.02	49.60		50.62	0.000142	8.33	5805.36	6445.63	0.33
D100-00-00_0008	71014	0.2PCT_500yr	35991.00	19.02	51.84		52.72	0.000112	7.95	7918.08	14479.52	0.30
D100-00-00_0008	70828	10PCT_10yr	25730.00	19.02	45.47		46.72	0.000225	8.99	3003.91	393.76	0.40
D100-00-00_0008	70828	2PCT_50yr	28684.00	19.02	47.55		48.70	0.000178	8.69	4179.96	1841.40	0.36
D100-00-00_0008	70828	1PCT_100yr	30653.00	19.02	49.62		50.55	0.000129	7.97	6098.52	6984.25	0.32
D100-00-00_0008	70828	0.2PCT_500yr	34589.00	19.02	51.86		52.66	0.000102	7.60	8347.48	14317.92	0.29
D100-00-00_0008	69468	10PCT_10yr	25730.00	19.02	45.11		46.40	0.000241	9.15	3304.55	928.76	0.41
D100-00-00_0008	69468	2PCT_50yr	28684.00	19.02	47.35		48.45	0.000177	8.60	4939.44	2732.88	0.36
D100-00-00_0008	69468	1PCT_100yr	30653.00	19.02	49.51		50.36	0.000123	7.75	6905.85	7665.79	0.31
D100-00-00_0008	69468	0.2PCT_500yr	34589.00	19.02	51.78		52.50	0.000096	7.35	9105.46	15140.30	0.28
D100-00-00_0008	68548	10PCT_10yr	25433.00	18.53	44.93		46.17	0.000226	8.96	3046.74	400.48	0.40
D100-00-00_0008	68548	2PCT_50yr	28138.00	18.53	47.20		48.28	0.000170	8.45	4305.94	1832.41	0.35
D100-00-00_0008	68548	1PCT_100yr	29855.00	18.53	49.43		50.24	0.000115	7.53	6269.67	7292.85	0.30
D100-00-00_0008	68548	0.2PCT_500yr	33530.00	18.53	51.73		52.41	0.000089	7.11	8326.46	14685.10	0.27
D100-00-00_0008	67310	10PCT_10yr	25433.00	17.70	44.70		45.88	0.000216	8.73	2972.27	427.27	0.39
D100-00-00_0008	67310	2PCT_50yr	28138.00	17.70	47.02		48.06	0.000169	8.24	4522.04	2636.58	0.35
D100-00-00_0008	67310	1PCT_100yr	29855.00	17.70	49.30		50.09	0.000114	7.35	6851.36	9108.48	0.29
D100-00-00_0008	67310	0.2PCT_500yr	33530.00	17.70	51.64		52.30	0.000087	6.92	9406.93	14839.16	0.26
D100-00-00_0008	66074	10PCT_10yr	25114.00	17.22	44.48		45.61	0.000199	8.51	2972.45	548.92	0.38
D100-00-00_0008	66074	2PCT_50yr	27557.00	17.22	46.86		47.84	0.000158	7.98	3817.43	2905.56	0.34
D100-00-00_0008	66074	1PCT_100yr	29013.00	17.22	49.19		49.95	0.000107	7.16	5002.88	9220.19	0.29
D100-00-00_0008	66074	0.2PCT_500yr	32416.00	17.22	51.53		52.19	0.000084	6.81	6496.37	13720.85	0.26
D100-00-00_0008	65662	10PCT_10yr	25114.00	17.02	44.40		45.53	0.000204	8.52	3010.22	926.31	0.38
D100-00-00_0008	65662	2PCT_50yr	27557.00	17.02	46.81		47.77	0.000160	7.92	3867.97	2974.79	0.34
D100-00-00_0008	65662	1PCT_100yr	29013.00	17.02	49.16		49.90	0.000110	7.07	5039.37	9673.16	0.29
D100-00-00_0008	65662	0.2PCT_500yr	32416.00	17.02	51.52		52.15	0.000084	6.68	6694.59	14437.04	0.26
D100-00-00_0008	65449	10PCT_10yr	25114.00	17.02	44.30	34.40	45.47	0.000203	8.67	2895.20	751.31	0.38
D100-00-00_0008	65449	2PCT_50yr	27557.00	17.02	46.65	35.16	47.71	0.000166	8.25	3502.60	3054.92	0.35
D100-00-00_0008	65449	1PCT_100yr	29013.00	17.02	49.02	35.59	49.85	0.000119	7.40	4744.94	9028.22	0.30
D100-00-00_0008	65449	0.2PCT_500yr	32416.00	17.02	51.41	36.57	52.11	0.000090	6.99	6293.55	14290.55	0.27
D100-00-00_0008	65406		Bridge									

HEC-RAS Plan: Prop River: D100-00-00 Reach: D100-00-00_0008 (Continued)

Reach	River Sta	Profile	Q Total	Min Ch El	W.S. Elev	Crit W.S.	E.G. Elev	E.G. Slope	Vel Chnl	Flow Area	Top Width	Froude # Chl
			(cfs)	(ft)	(ft)	(ft)	(ft)	(ft/ft)	(ft/s)	(sq ft)	(ft)	
D100-00-00_0008	65371	10PCT_10yr	25114.00	17.02	43.78		45.03	0.000222	8.96	2802.83	322.30	0.40
D100-00-00_0008	65371	2PCT_50yr	27557.00	17.02	46.17		47.29	0.000180	8.51	3274.75	2401.33	0.36
D100-00-00_0008	65371	1PCT_100yr	29013.00	17.02	48.40		49.32	0.000149	7.76	4236.56	7435.27	0.33
D100-00-00_0008	65371	0.2PCT_500yr	32416.00	17.02	51.21		51.94	0.000101	7.07	5997.89	14016.21	0.28
D100-00-00_0008	65279	10PCT_10yr	25114.00	17.02	43.76		45.01	0.000223	8.97	2799.10	336.12	0.40
D100-00-00_0008	65279	2PCT_50yr	27557.00	17.02	46.16		47.28	0.000179	8.50	3424.44	2524.92	0.36
D100-00-00_0008	65279	1PCT_100yr	29013.00	17.02	48.38		49.30	0.000137	7.77	4543.68	7467.38	0.32
D100-00-00_0008	65279	0.2PCT_500yr	32416.00	17.02	51.20		51.93	0.000095	7.12	6547.59	13607.85	0.27
D100-00-00_0008	64115	10PCT_10yr	27138.00	15.85	43.52		44.75	0.000215	8.90	3062.40	250.72	0.39
D100-00-00_0008	64115	2PCT_50yr	29401.00	15.85	46.01		47.05	0.000161	8.23	3872.81	1918.32	0.34
D100-00-00_0008	64115	1PCT_100yr	30812.00	15.85	48.31		49.13	0.000111	7.41	5145.03	8142.57	0.29
D100-00-00_0008	64115	0.2PCT_500yr	35009.00	15.85	51.12		51.81	0.000083	6.98	6978.10	13676.75	0.26
D100-00-00_0008	63605	10PCT_10yr	27138.00	15.96	43.35		44.63	0.000235	9.06	3044.26	535.66	0.41
D100-00-00_0008	63605	2PCT_50yr	29401.00	15.96	45.95		46.96	0.000160	8.18	4329.86	2020.54	0.34
D100-00-00_0008	63605	1PCT_100yr	30812.00	15.96	48.30		49.05	0.000105	7.20	6198.81	6912.07	0.28
D100-00-00_0008	63605	0.2PCT_500yr	35009.00	15.96	51.13		51.74	0.000076	6.72	8458.08	13817.41	0.25
D100-00-00_0008	63311	10PCT_10yr	27138.00	17.78	43.58		44.45	0.000150	7.54	3891.82	636.31	0.33
D100-00-00_0008	63311	2PCT_50yr	29401.00	17.78	46.14		46.83	0.000105	6.80	6492.19	1555.46	0.28
D100-00-00_0008	63311	1PCT_100yr	30812.00	17.78	48.46		48.95	0.000067	5.88	15937.19	7398.02	0.23
D100-00-00_0008	63311	0.2PCT_500yr	35009.00	17.78	51.37		51.62	0.000037	4.77	48642.21	13695.46	0.17
D100-00-00_0008	62990	10PCT_10yr	27138.00	17.66	43.57		44.39	0.000135	7.33	4030.74	543.69	0.31
D100-00-00_0008	62990	2PCT_50yr	29401.00	17.66	46.12		46.79	0.000095	6.68	6034.48	1273.99	0.27
D100-00-00_0008	62990	1PCT_100yr	30812.00	17.66	48.43		48.92	0.000064	5.91	12963.27	5662.66	0.23
D100-00-00_0008	62990	0.2PCT_500yr	35009.00	17.66	51.32		51.61	0.000038	4.94	41717.56	13634.51	0.18
D100-00-00_0008	62342	10PCT_10yr	27138.00	15.18	43.14		44.26	0.000206	8.49	3332.95	598.25	0.38
D100-00-00_0008	62342	2PCT_50yr	29401.00	15.18	45.86		46.70	0.000137	7.49	4813.31	904.50	0.32
D100-00-00_0008	62342	1PCT_100yr	30812.00	15.18	48.24		48.86	0.000089	6.58	6285.00	4499.40	0.26
D100-00-00_0008	62342	0.2PCT_500yr	35009.00	15.18	51.04		51.56	0.000066	6.18	8226.48	12799.74	0.23
D100-00-00_0008	62151	10PCT_10yr	27138.00	15.18	43.10	33.09	44.22	0.000196	8.49	3266.22	261.95	0.37
D100-00-00_0008	62151	2PCT_50yr	29401.00	15.18	45.72	33.75	46.65	0.000139	7.77	4177.58	710.44	0.32
D100-00-00_0008	62151	1PCT_100yr	30812.00	15.18	48.07	34.15	48.81	0.000096	7.02	5455.60	5364.70	0.27
D100-00-00_0008	62151	0.2PCT_500yr	35009.00	15.18	50.89	35.29	51.51	0.000072	6.63	7281.37	11644.16	0.24
D100-00-00_0008	62073		Bridge									
D100-00-00_0008	62007	10PCT_10yr	27138.00	15.18	42.10		43.40	0.000237	9.17	2969.56	202.98	0.41
D100-00-00_0008	62007	2PCT_50yr	29401.00	15.18	44.26		45.41	0.000184	8.63	3768.74	817.08	0.37
D100-00-00_0008	62007	1PCT_100yr	30812.00	15.18	47.12		47.90	0.000110	7.31	6119.45	3087.49	0.29
D100-00-00_0008	62007	0.2PCT_500yr	35009.00	15.18	50.70		51.27	0.000069	6.46	9140.87	11381.19	0.24
D100-00-00_0008	61830	10PCT_10yr	27138.00	15.18	42.06		43.35	0.000254	9.12	2998.46	258.48	0.42
D100-00-00_0008	61830	2PCT_50yr	29401.00	15.18	44.24		45.36	0.000190	8.49	3701.00	791.13	0.37
D100-00-00_0008	61830	1PCT_100yr	30812.00	15.18	47.09		47.88	0.000114	7.31	5511.47	4247.40	0.29
D100-00-00_0008	61830	0.2PCT_500yr	35009.00	15.18	50.68		51.25	0.000070	6.45	8366.72	11401.34	0.24
D100-00-00_0008	61637	10PCT_10yr	28200.00	14.70	41.98		43.30	0.000244	9.24	3051.55	198.63	0.42
D100-00-00_0008	61637	2PCT_50yr	30333.00	14.70	44.16		45.31	0.000211	8.61	3610.90	359.03	0.39
D100-00-00_0008	61637	1PCT_100yr	31831.00	14.70	47.05		47.86	0.000126	7.34	5383.31	4410.13	0.31
D100-00-00_0008	61637	0.2PCT_500yr	36226.00	14.70	50.65		51.24	0.000076	6.45	8250.00	11373.15	0.25
D100-00-00_0008	61320	10PCT_10yr	28200.00	14.70	41.87	32.97	43.22	0.000239	9.31	3058.70	260.42	0.41
D100-00-00_0008	61320	2PCT_50yr	30333.00	14.70	44.08	33.60	45.24	0.000183	8.70	3730.49	354.38	0.37
D100-00-00_0008	61320	1PCT_100yr	31831.00	14.70	46.94	34.01	47.80	0.000115	7.59	5037.16	4166.47	0.30
D100-00-00_0008	61320	0.2PCT_500yr	36226.00	14.70	50.51	35.16	51.18	0.000077	6.91	7130.63	12087.91	0.25
D100-00-00_0008	61288		Bridge									
D100-00-00_0008	61265	10PCT_10yr	28200.00	14.70	41.45		42.88	0.000260	9.57	2958.51	221.15	0.43
D100-00-00_0008	61265	2PCT_50yr	30333.00	14.70	43.71		44.93	0.000195	8.91	3599.03	371.83	0.38
D100-00-00_0008	61265	1PCT_100yr	31831.00	14.70	46.55		47.47	0.000124	7.79	4877.47	3453.75	0.31
D100-00-00_0008	61265	0.2PCT_500yr	36226.00	14.70	50.14		50.85	0.000082	7.06	7140.41	11450.92	0.26
D100-00-00_0008	60903	10PCT_10yr	28200.00	14.70	41.33		42.77	0.000266	9.65	2931.08	215.04	0.43
D100-00-00_0008	60903	2PCT_50yr	30333.00	14.70	43.62		44.86	0.000198	8.95	3602.77	417.89	0.38
D100-00-00_0008	60903	1PCT_100yr	31831.00	14.70	46.52		47.41	0.000122	7.72	5158.96	3298.61	0.31
D100-00-00_0008	60903	0.2PCT_500yr	36226.00	14.70	50.14		50.80	0.000078	6.89	7330.04	12756.44	0.25
D100-00-00_0008	60444	10PCT_10yr	28200.00	13.07	41.32		42.61	0.000246	9.11	3095.61	207.97	0.42
D100-00-00_0008	60444	2PCT_50yr	30333.00	13.07	43.63		44.73	0.000190	8.40	3711.57	670.06	0.37
D100-00-00_0008	60444	1PCT_100yr	31831.00	13.07	46.54		47.32	0.000111	7.20	5649.03	3818.44	0.29
D100-00-00_0008	60444	0.2PCT_500yr	36226.00	13.07	50.16		50.74	0.000070	6.41	8393.04	12622.82	0.24
D100-00-00_0008	60180	10PCT_10yr	28200.00	13.07	41.28	32.19	42.52	0.000234	8.94	3155.92	210.31	0.41
D100-00-00_0008	60180	2PCT_50yr	30333.00	13.07	43.60	32.80	44.66	0.000187	8.27	3666.28	296.53	0.37

HEC-RAS Plan: Prop River: D100-00-00 Reach: D100-00-00_0008 (Continued)

Reach	River Sta	Profile	Q Total	Min Ch El	W.S. Elev	Crit W.S.	E.G. Elev	E.G. Slope	Vel Chnl	Flow Area	Top Width	Froude # Chl
			(cfs)	(ft)	(ft)	(ft)	(ft)	(ft/ft)	(ft/s)	(sq ft)	(ft)	
D100-00-00_0008	60180	1PCT_100yr	31831.00	13.07	46.50	33.23	47.29	0.000121	7.16	5027.00	3460.80	0.30
D100-00-00_0008	60180	0.2PCT_500yr	36226.00	13.07	50.16	34.37	50.71	0.000072	6.25	8036.46	13096.94	0.24
D100-00-00_0008	60133		Bridge									
D100-00-00_0008	60087	10PCT_10yr	28200.00	13.07	40.96		42.30	0.000259	9.29	3036.89	206.20	0.43
D100-00-00_0008	60087	2PCT_50yr	30333.00	13.07	43.08		44.25	0.000215	8.67	3497.55	229.07	0.39
D100-00-00_0008	60087	1PCT_100yr	31831.00	13.07	45.65		46.56	0.000147	7.69	4456.17	1561.01	0.33
D100-00-00_0008	60087	0.2PCT_500yr	36226.00	13.07	50.02		50.60	0.000075	6.41	7965.95	13148.31	0.24
D100-00-00_0008	59882	10PCT_10yr	28200.00	13.07	40.63		42.18	0.000282	9.98	2824.95	180.70	0.45
D100-00-00_0008	59882	2PCT_50yr	30333.00	13.07	42.78		44.14	0.000244	9.37	3236.58	205.35	0.42
D100-00-00_0008	59882	1PCT_100yr	31831.00	13.07	45.41		46.48	0.000175	8.31	4446.54	1906.52	0.36
D100-00-00_0008	59882	0.2PCT_500yr	36226.00	13.07	49.72		50.52	0.000100	7.30	7561.26	11814.38	0.28
D100-00-00_0008	59575	10PCT_10yr	28200.00	13.07	40.55	32.19	42.09	0.000283	9.97	2829.63	182.48	0.45
D100-00-00_0008	59575	2PCT_50yr	30333.00	13.07	42.71	32.83	44.07	0.000232	9.36	3240.01	198.28	0.41
D100-00-00_0008	59575	1PCT_100yr	31831.00	13.07	45.34	33.29	46.42	0.000173	8.37	3964.75	1443.19	0.36
D100-00-00_0008	59575	0.2PCT_500yr	36226.00	13.07	49.62	34.49	50.47	0.000103	7.49	6582.88	12586.93	0.29
D100-00-00_0008	59546		Bridge									
D100-00-00_0008	59517	10PCT_10yr	28200.00	13.07	40.21		41.82	0.000303	10.17	2772.32	183.07	0.46
D100-00-00_0008	59517	2PCT_50yr	30333.00	13.07	42.45		43.85	0.000247	9.47	3201.78	202.29	0.42
D100-00-00_0008	59517	1PCT_100yr	31831.00	13.07	44.85		46.00	0.000175	8.61	3773.85	799.95	0.36
D100-00-00_0008	59517	0.2PCT_500yr	36226.00	13.07	48.60		49.60	0.000117	8.02	5608.89	11230.28	0.30
D100-00-00_0008	59253	10PCT_10yr	28200.00	13.07	40.05		41.72	0.000311	10.36	2722.34	177.56	0.47
D100-00-00_0008	59253	2PCT_50yr	30333.00	13.07	42.32		43.77	0.000246	9.65	3144.40	195.57	0.42
D100-00-00_0008	59253	1PCT_100yr	31831.00	13.07	44.73		45.94	0.000173	8.82	3756.82	1201.39	0.36
D100-00-00_0008	59253	0.2PCT_500yr	36226.00	13.07	48.53		49.56	0.000117	8.19	6268.71	11257.32	0.30
D100-00-00_0008	58740	10PCT_10yr	28200.00	13.07	39.88		41.56	0.000317	10.41	2709.36	178.45	0.47
D100-00-00_0008	58740	2PCT_50yr	30333.00	13.07	42.19		43.64	0.000247	9.67	3202.57	283.15	0.42
D100-00-00_0008	58740	1PCT_100yr	31831.00	13.07	44.66		45.84	0.000178	8.76	4124.52	726.48	0.36
D100-00-00_0008	58740	0.2PCT_500yr	36226.00	13.07	48.52		49.47	0.000117	7.95	7821.74	12193.14	0.30
D100-00-00_0008	58411	10PCT_10yr	28200.00	12.74	39.85		41.42	0.000296	10.05	2805.34	185.92	0.46
D100-00-00_0008	58411	2PCT_50yr	30333.00	12.74	42.18		43.54	0.000220	9.34	3385.69	324.36	0.40
D100-00-00_0008	58411	1PCT_100yr	31831.00	12.74	44.65		45.77	0.000152	8.51	4681.32	1011.69	0.34
D100-00-00_0008	58411	0.2PCT_500yr	36226.00	12.74	48.52		49.42	0.000100	7.77	9223.91	12128.59	0.28
D100-00-00_0008	58219	10PCT_10yr	28200.00	12.74	39.62	31.95	41.33	0.000319	10.47	2694.46	176.42	0.47
D100-00-00_0008	58219	2PCT_50yr	30333.00	12.74	42.00	32.59	43.46	0.000244	9.69	3157.64	278.26	0.42
D100-00-00_0008	58219	1PCT_100yr	31831.00	12.74	44.52	33.02	45.71	0.000173	8.78	4175.53	798.01	0.36
D100-00-00_0008	58219	0.2PCT_500yr	36226.00	12.74	48.41	34.22	49.38	0.000112	8.03	8196.69	12478.23	0.30
D100-00-00_0008	58182		Bridge									
D100-00-00_0008	58107	10PCT_10yr	28200.00	12.74	39.17		40.98	0.000346	10.79	2614.61	174.02	0.49
D100-00-00_0008	58107	2PCT_50yr	30333.00	12.74	41.67		43.19	0.000259	9.89	3068.70	194.91	0.43
D100-00-00_0008	58107	1PCT_100yr	31831.00	12.74	43.82		45.12	0.000195	9.15	3696.62	376.69	0.38
D100-00-00_0008	58107	0.2PCT_500yr	36226.00	12.74	47.42		48.53	0.000137	8.52	6542.64	9414.30	0.33
D100-00-00_0008	57958	10PCT_10yr	28200.00	12.74	39.07		40.91	0.000359	10.89	2589.82	174.93	0.50
D100-00-00_0008	57958	2PCT_50yr	30333.00	12.74	41.63		43.15	0.000278	9.91	3061.57	197.22	0.44
D100-00-00_0008	57958	1PCT_100yr	31831.00	12.74	43.80		45.07	0.000215	9.06	3598.59	357.82	0.39
D100-00-00_0008	57958	0.2PCT_500yr	36226.00	12.74	47.43		48.48	0.000153	8.26	6034.01	10543.09	0.34
D100-00-00_0008	57245	10PCT_10yr	28200.00	11.89	39.02		40.61	0.000291	10.10	2793.27	180.55	0.45
D100-00-00_0008	57245	2PCT_50yr	30333.00	11.89	41.59		42.92	0.000218	9.27	3273.65	193.95	0.40
D100-00-00_0008	57245	1PCT_100yr	31831.00	11.89	43.75		44.90	0.000172	8.59	3754.73	407.01	0.36
D100-00-00_0008	57245	0.2PCT_500yr	36226.00	11.89	47.36		48.37	0.000123	8.06	5351.93	8046.13	0.31
D100-00-00_0008	56478	10PCT_10yr	28200.00	10.79	38.98		40.33	0.000251	9.32	3025.39	198.71	0.42
D100-00-00_0008	56478	2PCT_50yr	30333.00	10.79	41.58		42.70	0.000193	8.50	3609.16	320.85	0.37
D100-00-00_0008	56478	1PCT_100yr	31831.00	10.79	43.78		44.72	0.000141	7.80	4571.84	970.54	0.33
D100-00-00_0008	56478	0.2PCT_500yr	36226.00	10.79	47.43		48.22	0.000094	7.22	7571.13	9510.39	0.27
D100-00-00_0008	56318	10PCT_10yr	28200.00	10.79	38.75	30.10	40.24	0.000269	9.81	2873.36	182.51	0.44
D100-00-00_0008	56318	2PCT_50yr	30333.00	10.79	41.38	30.74	42.63	0.000209	8.98	3378.33	203.80	0.39
D100-00-00_0008	56318	1PCT_100yr	31831.00	10.79	43.61	31.18	44.66	0.000174	8.23	4136.22	930.40	0.36
D100-00-00_0008	56318	0.2PCT_500yr	36226.00	10.79	47.38	32.37	48.20	0.000112	7.36	7924.67	9105.39	0.29
D100-00-00_0008	56267		Bridge									
D100-00-00_0008	56211	10PCT_10yr	28200.00	10.79	38.43		39.93	0.000286	9.84	2864.82	190.60	0.45
D100-00-00_0008	56211	2PCT_50yr	30333.00	10.79	41.15		42.38	0.000201	8.91	3460.08	239.36	0.38
D100-00-00_0008	56211	1PCT_100yr	31831.00	10.79	43.27		44.34	0.000154	8.28	4048.83	520.95	0.34
D100-00-00_0008	56211	0.2PCT_500yr	36226.00	10.79	46.65		47.59	0.000110	7.84	6760.41	8211.58	0.30

HEC-RAS Plan: Prop River: D100-00-00 Reach: D100-00-00_0008 (Continued)

Reach	River Sta	Profile	Q Total	Min Ch El	W.S. Elev	Crit W.S.	E.G. Elev	E.G. Slope	Vel Chnl	Flow Area	Top Width	Froude # Chl
			(cfs)	(ft)	(ft)	(ft)	(ft)	(ft/ft)	(ft/s)	(sq ft)	(ft)	
D100-00-00_0008	56011	10PCT_10yr	28200.00	10.79	38.39		39.85	0.000284	9.72	2902.24	196.48	0.45
D100-00-00_0008	56011	2PCT_50yr	30333.00	10.79	41.13		42.32	0.000208	8.73	3475.89	242.40	0.39
D100-00-00_0008	56011	1PCT_100yr	31831.00	10.79	43.28		44.28	0.000152	8.03	4488.34	1048.18	0.34
D100-00-00_0008	56011	0.2PCT_500yr	36226.00	10.79	46.68		47.52	0.000104	7.45	8000.08	8495.06	0.29
D100-00-00_0008	55360	10PCT_10yr	28200.00	10.79	38.15		39.66	0.000295	9.87	2855.80	194.45	0.45
D100-00-00_0008	55360	2PCT_50yr	30333.00	10.79	40.97		42.18	0.000215	8.83	3437.76	222.67	0.39
D100-00-00_0008	55360	1PCT_100yr	31831.00	10.79	43.17		44.17	0.000160	8.06	4570.87	1934.94	0.34
D100-00-00_0008	55360	0.2PCT_500yr	36226.00	10.79	46.61		47.45	0.000107	7.44	7545.83	7433.38	0.29
D100-00-00_0008	54524	10PCT_10yr	28200.00	9.46	37.77		39.39	0.000312	10.24	2754.52	244.21	0.47
D100-00-00_0008	54524	2PCT_50yr	30333.00	9.46	40.69		41.99	0.000219	9.14	3317.50	890.44	0.40
D100-00-00_0008	54524	1PCT_100yr	31831.00	9.46	42.93		44.03	0.000169	8.41	3879.20	1657.59	0.35
D100-00-00_0008	54524	0.2PCT_500yr	36226.00	9.46	46.38		47.34	0.000119	7.91	5809.84	7525.07	0.30
D100-00-00_0008	54310	10PCT_10yr	28200.00	9.46	37.67	29.86	39.32	0.000317	10.30	2736.60	183.17	0.47
D100-00-00_0008	54310	2PCT_50yr	30333.00	9.46	40.63	30.51	41.94	0.000221	9.18	3305.54	685.47	0.40
D100-00-00_0008	54310	1PCT_100yr	31831.00	9.46	42.89	30.94	43.99	0.000170	8.43	3887.41	1645.42	0.35
D100-00-00_0008	54310	0.2PCT_500yr	36226.00	9.46	46.36	32.16	47.31	0.000119	7.90	6108.50	7058.18	0.30
D100-00-00_0008	54244		Bridge									
D100-00-00_0008	54178	10PCT_10yr	28200.00	9.46	37.09		38.88	0.000352	10.71	2632.29	179.70	0.49
D100-00-00_0008	54178	2PCT_50yr	30333.00	9.46	40.00		41.41	0.000245	9.54	3180.29	459.68	0.42
D100-00-00_0008	54178	1PCT_100yr	31831.00	9.46	41.92		43.15	0.000198	8.92	3587.64	1312.35	0.38
D100-00-00_0008	54178	0.2PCT_500yr	36226.00	9.46	44.77		45.91	0.000157	8.62	4968.64	4340.73	0.35
D100-00-00_0008	53943	10PCT_10yr	28200.00	9.46	36.97		38.79	0.000360	10.80	2655.44	250.79	0.50
D100-00-00_0008	53943	2PCT_50yr	30333.00	9.46	39.95		41.35	0.000245	9.53	3485.31	523.84	0.42
D100-00-00_0008	53943	1PCT_100yr	31831.00	9.46	41.89		43.09	0.000195	8.83	4492.99	1651.70	0.38
D100-00-00_0008	53943	0.2PCT_500yr	36226.00	9.46	44.78		45.83	0.000148	8.37	6800.58	5655.91	0.34
D100-00-00_0008	53426	10PCT_10yr	28200.00	9.46	36.71		38.59	0.000378	11.00	2563.27	177.36	0.51
D100-00-00_0008	53426	2PCT_50yr	30333.00	9.46	39.76		41.22	0.000256	9.68	3132.97	435.36	0.43
D100-00-00_0008	53426	1PCT_100yr	31831.00	9.46	41.72		42.98	0.000204	9.00	3931.20	1709.60	0.38
D100-00-00_0008	53426	0.2PCT_500yr	36226.00	9.46	44.67		45.75	0.000153	8.47	7009.60	4713.31	0.34
D100-00-00_0008	52853	10PCT_10yr	28200.00	8.48	36.68		38.31	0.000323	10.24	2754.75	189.00	0.47
D100-00-00_0008	52853	2PCT_50yr	30333.00	8.48	39.76		41.02	0.000216	9.02	3362.33	301.40	0.39
D100-00-00_0008	52853	1PCT_100yr	31831.00	8.48	41.73		42.83	0.000167	8.40	4336.82	1554.96	0.35
D100-00-00_0008	52853	0.2PCT_500yr	36226.00	8.48	44.68		45.64	0.000123	7.97	7836.59	4146.31	0.31
D100-00-00_0008	52659	10PCT_10yr	28200.00	8.48	36.59	29.11	38.24	0.000328	10.30	2738.24	188.48	0.48
D100-00-00_0008	52659	2PCT_50yr	30333.00	8.48	39.70	29.75	40.98	0.000216	9.06	3353.92	252.48	0.39
D100-00-00_0008	52659	1PCT_100yr	31831.00	8.48	41.70	30.19	42.79	0.000169	8.40	4761.15	1465.03	0.35
D100-00-00_0008	52659	0.2PCT_500yr	36226.00	8.48	44.67	31.42	45.60	0.000123	7.87	8380.97	4236.74	0.31
D100-00-00_0008	52603		Bridge									
D100-00-00_0008	52555	10PCT_10yr	28200.00	8.48	36.31		38.03	0.000346	10.50	2685.38	186.83	0.49
D100-00-00_0008	52555	2PCT_50yr	30333.00	8.48	39.39		40.72	0.000229	9.23	3312.19	312.88	0.40
D100-00-00_0008	52555	1PCT_100yr	31831.00	8.48	41.12		42.29	0.000187	8.70	4305.71	1231.39	0.37
D100-00-00_0008	52555	0.2PCT_500yr	36226.00	8.48	43.88		44.90	0.000145	8.24	7437.55	3867.22	0.33
D100-00-00_0008	52372	10PCT_10yr	28200.00	8.48	36.22		37.96	0.000352	10.57	2668.50	186.24	0.49
D100-00-00_0008	52372	2PCT_50yr	30333.00	8.48	39.35		40.67	0.000233	9.25	3307.61	333.49	0.41
D100-00-00_0008	52372	1PCT_100yr	31831.00	8.48	41.09		42.25	0.000192	8.69	4282.89	1444.55	0.37
D100-00-00_0008	52372	0.2PCT_500yr	36226.00	8.48	43.85		44.88	0.000156	8.22	6778.93	4504.84	0.34
D100-00-00_0008	51466	10PCT_10yr	30041.00	7.65	35.86		37.64	0.000343	10.71	2804.52	188.26	0.49
D100-00-00_0008	51466	2PCT_50yr	33720.00	7.65	38.92		40.43	0.000255	9.88	3538.25	428.36	0.43
D100-00-00_0008	51466	1PCT_100yr	35633.00	7.65	40.72		42.05	0.000206	9.32	5077.39	1937.12	0.39
D100-00-00_0008	51466	0.2PCT_500yr	39606.00	7.65	43.69		44.74	0.000138	8.46	9307.89	4562.33	0.33
D100-00-00_0008	50814	10PCT_10yr	30041.00	4.91	36.05		37.30	0.000222	9.00	3480.27	343.48	0.40
D100-00-00_0008	50814	2PCT_50yr	33720.00	4.91	39.12		40.15	0.000184	8.21	5791.06	1236.29	0.36
D100-00-00_0008	50814	1PCT_100yr	35633.00	4.91	40.95		41.80	0.000142	7.56	8254.86	1612.44	0.32
D100-00-00_0008	50814	0.2PCT_500yr	39606.00	4.91	43.90		44.54	0.000094	6.77	13650.73	4989.76	0.27
D100-00-00_0008	50583	10PCT_10yr	30041.00	4.91	35.87	26.09	37.22	0.000236	9.33	3220.67	200.70	0.41
D100-00-00_0008	50583	2PCT_50yr	33720.00	4.91	38.89	27.18	40.06	0.000183	8.71	4498.68	1030.15	0.37
D100-00-00_0008	50583	1PCT_100yr	35633.00	4.91	40.69	27.71	41.71	0.000144	8.19	6703.53	1420.60	0.33
D100-00-00_0008	50583	0.2PCT_500yr	39606.00	4.91	43.67	28.76	44.48	0.000099	7.46	12104.12	3963.57	0.28
D100-00-00_0008	50574		Bridge									
D100-00-00_0008	50565	10PCT_10yr	30041.00	4.91	35.68		37.10	0.000255	9.56	3142.07	199.07	0.42
D100-00-00_0008	50565	2PCT_50yr	33720.00	4.91	38.74		39.96	0.000198	8.88	4337.39	911.90	0.38
D100-00-00_0008	50565	1PCT_100yr	35633.00	4.91	40.39		41.47	0.000175	8.39	6275.79	1342.03	0.36
D100-00-00_0008	50565	0.2PCT_500yr	39606.00	4.91	43.42		44.23	0.000114	7.48	11732.33	3416.13	0.30

HEC-RAS Plan: Prop River: D100-00-00 Reach: D100-00-00_0008 (Continued)

Reach	River Sta	Profile	Q Total	Min Ch El	W.S. Elev	Crit W.S.	E.G. Elev	E.G. Slope	Vel Chnl	Flow Area	Top Width	Froude # Chl
			(cfs)	(ft)	(ft)	(ft)	(ft)	(ft/ft)	(ft/s)	(sq ft)	(ft)	
D100-00-00_0008	50345	10PCT_10yr	30041.00	9.03	35.51		37.01	0.000277	9.84	3052.36	201.02	0.45
D100-00-00_0008	50345	2PCT_50yr	33720.00	9.03	38.62		39.90	0.000201	9.08	4069.22	815.06	0.39
D100-00-00_0008	50345	1PCT_100yr	35633.00	9.03	40.26		41.41	0.000162	8.66	5920.65	1650.11	0.35
D100-00-00_0008	50345	0.2PCT_500yr	39606.00	9.03	43.30		44.18	0.000108	7.81	12276.58	3475.80	0.29
D100-00-00_0008	49222	10PCT_10yr	30041.00	4.91	35.31		36.68	0.000252	9.39	3198.36	207.89	0.42
D100-00-00_0008	49222	2PCT_50yr	33720.00	4.91	38.49		39.65	0.000184	8.65	4072.49	551.11	0.37
D100-00-00_0008	49222	1PCT_100yr	35633.00	4.91	40.15		41.20	0.000153	8.27	5503.72	1215.32	0.34
D100-00-00_0008	49222	0.2PCT_500yr	39606.00	4.91	43.21		44.05	0.000106	7.56	10797.38	3980.89	0.29
D100-00-00_0008	48436	10PCT_10yr	30041.00	3.48	35.30		36.43	0.000193	8.52	3533.92	236.31	0.37
D100-00-00_0008	48436	2PCT_50yr	33720.00	3.48	38.49		39.46	0.000156	7.88	4664.23	687.03	0.34
D100-00-00_0008	48436	1PCT_100yr	35633.00	3.48	40.17		41.03	0.000132	7.49	6275.78	2029.84	0.31
D100-00-00_0008	48436	0.2PCT_500yr	39606.00	3.48	43.25		43.93	0.000091	6.76	11340.37	5165.34	0.27
D100-00-00_0008	48182	10PCT_10yr	30041.00	3.48	35.14	24.55	36.35	0.000206	8.85	3392.90	205.90	0.38
D100-00-00_0008	48182	2PCT_50yr	33720.00	3.48	38.35	25.59	39.39	0.000155	8.20	4725.69	727.08	0.34
D100-00-00_0008	48182	1PCT_100yr	35633.00	3.48	40.05	26.10	40.98	0.000126	7.81	6746.58	1802.65	0.31
D100-00-00_0008	48182	0.2PCT_500yr	39606.00	3.48	43.14	27.12	43.88	0.000087	7.15	11415.61	4627.81	0.26
D100-00-00_0008	48156		Bridge									
D100-00-00_0008	48130	10PCT_10yr	30041.00	3.48	34.94		36.17	0.000214	8.91	3370.65	208.29	0.39
D100-00-00_0008	48130	2PCT_50yr	33720.00	3.48	38.20		39.24	0.000167	8.20	4614.70	929.29	0.35
D100-00-00_0008	48130	1PCT_100yr	35633.00	3.48	39.94		40.85	0.000137	7.73	6746.17	1695.03	0.32
D100-00-00_0008	48130	0.2PCT_500yr	39606.00	3.48	43.00		43.72	0.000092	7.03	11113.70	4366.66	0.27
D100-00-00_0008	47910	10PCT_10yr	30041.00	3.48	34.85		36.12	0.000214	9.03	3327.63	201.78	0.39
D100-00-00_0008	47910	2PCT_50yr	33720.00	3.48	38.11		39.19	0.000169	8.36	4113.02	598.41	0.35
D100-00-00_0008	47910	1PCT_100yr	35633.00	3.48	39.80		40.80	0.000137	8.01	5324.66	1540.82	0.32
D100-00-00_0008	47910	0.2PCT_500yr	39606.00	3.48	42.82		43.66	0.000099	7.49	8599.78	3751.29	0.28
D100-00-00_0008	47648	10PCT_10yr	30041.00	3.48	34.66	24.53	36.03	0.000214	9.39	3200.93	180.54	0.39
D100-00-00_0008	47648	2PCT_50yr	33720.00	3.48	37.89	25.50	39.11	0.000169	8.85	3843.85	321.71	0.35
D100-00-00_0008	47648	1PCT_100yr	35633.00	3.48	39.58	26.00	40.71	0.000160	8.55	4859.61	1951.09	0.34
D100-00-00_0008	47648	0.2PCT_500yr	39606.00	3.48	42.65	26.95	43.60	0.000116	7.94	7905.58	3918.49	0.30
D100-00-00_0008	47623		Bridge									
D100-00-00_0008	47599	10PCT_10yr	30041.00	3.48	34.37		35.78	0.000224	9.54	3148.23	179.23	0.40
D100-00-00_0008	47599	2PCT_50yr	33720.00	3.48	37.57		38.83	0.000176	9.00	3753.02	233.46	0.36
D100-00-00_0008	47599	1PCT_100yr	35633.00	3.48	39.10		40.30	0.000155	8.80	4426.14	1489.17	0.34
D100-00-00_0008	47599	0.2PCT_500yr	39606.00	3.48	41.93		43.01	0.000120	8.41	7158.48	3088.90	0.31
D100-00-00_0008	47458	10PCT_10yr	30041.00	3.48	34.41		35.68	0.000223	9.05	3318.15	207.32	0.40
D100-00-00_0008	47458	2PCT_50yr	33720.00	3.48	37.63		38.71	0.000181	8.33	4350.39	657.69	0.36
D100-00-00_0008	47458	1PCT_100yr	35633.00	3.48	39.19		40.17	0.000152	7.98	5517.70	1567.47	0.34
D100-00-00_0008	47458	0.2PCT_500yr	39606.00	3.48	42.04		42.87	0.000108	7.44	8329.51	3249.89	0.29
D100-00-00_0008	47268	10PCT_10yr	30892.00	3.26	34.34		35.64	0.000233	9.11	3389.34	262.52	0.41
D100-00-00_0008	47268	2PCT_50yr	34791.00	3.26	37.58		38.67	0.000174	8.39	4456.68	1013.74	0.36
D100-00-00_0008	47268	1PCT_100yr	36807.00	3.26	39.13		40.13	0.000144	8.09	5548.40	1787.10	0.33
D100-00-00_0008	47268	0.2PCT_500yr	41557.00	3.26	41.92		42.84	0.000111	7.78	7821.04	4118.08	0.30
D100-00-00_0008	46808	10PCT_10yr	30892.00	2.00	34.46		35.45	0.000173	7.97	3876.38	369.39	0.35
D100-00-00_0008	46808	2PCT_50yr	34791.00	2.00	37.69		38.53	0.000138	7.33	4823.21	1286.08	0.32
D100-00-00_0008	46808	1PCT_100yr	36807.00	2.00	39.23		40.00	0.000118	7.08	5476.67	1535.17	0.30
D100-00-00_0008	46808	0.2PCT_500yr	41557.00	2.00	42.01		42.74	0.000093	6.83	6857.36	3717.72	0.27
D100-00-00_0008	46603	10PCT_10yr	30892.00	2.00	34.45	23.11	35.40	0.000159	7.83	3963.60	665.65	0.34
D100-00-00_0008	46603	2PCT_50yr	34791.00	2.00	37.66	24.15	38.50	0.000111	7.36	4914.21	1358.59	0.29
D100-00-00_0008	46603	1PCT_100yr	36807.00	2.00	39.17	24.66	39.97	0.000097	7.22	5450.57	1651.51	0.28
D100-00-00_0008	46603	0.2PCT_500yr	41557.00	2.00	41.90	25.79	42.69	0.000081	7.19	6478.06	3934.09	0.26
D100-00-00_0008	46575		Bridge									
D100-00-00_0008	46536	10PCT_10yr	30892.00	2.00	34.21		35.28	0.000156	8.30	3830.17	1228.36	0.34
D100-00-00_0008	46536	2PCT_50yr	34791.00	2.00	37.42		38.39	0.000114	7.91	4947.96	1521.35	0.30
D100-00-00_0008	46536	1PCT_100yr	36807.00	2.00	38.93		39.87	0.000101	7.79	5482.96	1559.96	0.29
D100-00-00_0008	46536	0.2PCT_500yr	41557.00	2.00	41.66		42.59	0.000088	7.82	6446.24	4141.81	0.27
D100-00-00_0008	46472	10PCT_10yr	30892.00	2.00	34.23	23.09	35.24	0.000152	8.07	3939.40	4174.32	0.34
D100-00-00_0008	46472	2PCT_50yr	34791.00	2.00	37.45	24.10	38.35	0.000110	7.66	5036.05	4369.47	0.29
D100-00-00_0008	46472	1PCT_100yr	36807.00	2.00	38.96	24.60	39.83	0.000097	7.54	5557.60	4599.92	0.28
D100-00-00_0008	46472	0.2PCT_500yr	41557.00	2.00	41.68	25.75	42.55	0.000083	7.55	6496.92	5160.59	0.26
D100-00-00_0008	46328		Bridge									
D100-00-00_0008	46185	10PCT_10yr	30892.00	2.00	33.79		34.89	0.000183	8.40	3676.37	2181.11	0.36
D100-00-00_0008	46185	2PCT_50yr	34791.00	2.00	36.59		37.59	0.000155	8.02	4336.49	3243.19	0.34
D100-00-00_0008	46185	1PCT_100yr	36807.00	2.00	37.94		38.90	0.000147	7.86	4685.27	3459.43	0.33

HEC-RAS Plan: Prop River: D100-00-00 Reach: D100-00-00_0008 (Continued)

Reach	River Sta	Profile	Q Total	Min Ch El	W.S. Elev	Crit W.S.	E.G. Elev	E.G. Slope	Vel Chnl	Flow Area	Top Width	Froude # Chl
			(cfs)	(ft)	(ft)	(ft)	(ft)	(ft/ft)	(ft/s)	(sq ft)	(ft)	
D100-00-00_0008	46185	0.2PCT_500yr	41557.00	2.00	40.35		41.29	0.000128	7.77	5362.61	4080.75	0.31
D100-00-00_0008	46126	10PCT_10yr	30892.00	2.00	33.77	23.07	34.88	0.000181	8.43	3663.13	409.47	0.36
D100-00-00_0008	46126	2PCT_50yr	34791.00	2.00	36.56	24.10	37.58	0.000150	8.10	4294.38	693.45	0.33
D100-00-00_0008	46126	1PCT_100yr	36807.00	2.00	37.90	24.60	38.88	0.000139	7.97	4616.62	979.84	0.32
D100-00-00_0008	46126	0.2PCT_500yr	41557.00	2.00	40.28	25.75	41.27	0.000127	7.96	5222.03	2050.85	0.31
D100-00-00_0008	46079		Bridge									
D100-00-00_0008	46039	10PCT_10yr	30892.00	2.00	33.60		34.73	0.000187	8.52	3624.92	246.90	0.37
D100-00-00_0008	46039	2PCT_50yr	34791.00	2.00	36.40		37.44	0.000153	8.17	4258.70	507.20	0.34
D100-00-00_0008	46039	1PCT_100yr	36807.00	2.00	37.75		38.76	0.000141	8.03	4581.60	1079.81	0.33
D100-00-00_0008	46039	0.2PCT_500yr	41557.00	2.00	40.15		41.14	0.000130	8.01	5186.23	2075.52	0.32
D100-00-00_0008	46008	10PCT_10yr	30892.00	2.00	33.59		34.72	0.000187	8.53	3622.95	217.61	0.37
D100-00-00_0008	46008	2PCT_50yr	34791.00	2.00	36.40		37.44	0.000153	8.17	4256.95	651.19	0.34
D100-00-00_0008	46008	1PCT_100yr	36807.00	2.00	37.75		38.75	0.000142	8.04	4579.91	953.02	0.33
D100-00-00_0008	46008	0.2PCT_500yr	41557.00	2.00	40.14		41.14	0.000130	8.02	5184.58	2159.57	0.32
D100-00-00_0008	44835	10PCT_10yr	30892.00	1.47	33.17		34.47	0.000214	9.13	3385.08	201.90	0.39
D100-00-00_0008	44835	2PCT_50yr	34791.00	1.47	36.05		37.23	0.000176	8.71	3993.49	313.96	0.36
D100-00-00_0008	44835	1PCT_100yr	36807.00	1.47	37.43		38.56	0.000157	8.55	4409.09	1306.47	0.34
D100-00-00_0008	44835	0.2PCT_500yr	41557.00	1.47	39.85		40.97	0.000133	8.52	5699.83	1987.80	0.32
D100-00-00_0008	44044	10PCT_10yr	30892.00	0.89	32.98		34.30	0.000213	9.22	3350.79	243.70	0.39
D100-00-00_0008	44044	2PCT_50yr	34791.00	0.89	35.88		37.09	0.000175	8.83	3941.09	746.98	0.36
D100-00-00_0008	44044	1PCT_100yr	36807.00	0.89	37.26		38.43	0.000167	8.67	4247.51	1019.70	0.35
D100-00-00_0008	44044	0.2PCT_500yr	41557.00	0.89	39.71		40.86	0.000150	8.62	4861.93	1908.70	0.34
D100-00-00_0008	43888	10PCT_10yr	30892.00	0.81	33.06		34.22	0.000193	8.64	3577.22	274.06	0.37
D100-00-00_0008	43888	2PCT_50yr	34791.00	0.81	35.96		37.02	0.000149	8.24	4236.31	1236.29	0.34
D100-00-00_0008	43888	1PCT_100yr	36807.00	0.81	37.34		38.36	0.000132	8.11	4586.01	1446.88	0.32
D100-00-00_0008	43888	0.2PCT_500yr	41557.00	0.81	39.77		40.80	0.000115	8.16	5344.84	2025.95	0.30
D100-00-00_0008	43729	10PCT_10yr	30892.00	0.81	33.02	22.17	34.18	0.000195	8.66	3567.23	565.50	0.38
D100-00-00_0008	43729	2PCT_50yr	34791.00	0.81	35.94	23.28	36.99	0.000153	8.22	4467.76	799.01	0.34
D100-00-00_0008	43729	1PCT_100yr	36807.00	0.81	37.33	23.82	38.34	0.000134	8.06	4944.48	1155.62	0.32
D100-00-00_0008	43729	0.2PCT_500yr	41557.00	0.81	39.77	25.04	40.77	0.000115	8.06	5885.99	1885.09	0.30
D100-00-00_0008	43706		Bridge									
D100-00-00_0008	43684	10PCT_10yr	30892.00	0.81	32.82		34.01	0.000202	8.76	3525.76	374.03	0.38
D100-00-00_0008	43684	2PCT_50yr	34791.00	0.81	35.37		36.49	0.000169	8.48	4241.49	754.19	0.35
D100-00-00_0008	43684	1PCT_100yr	36807.00	0.81	36.57		37.67	0.000151	8.39	4696.26	861.48	0.34
D100-00-00_0008	43684	0.2PCT_500yr	41557.00	0.81	38.90		39.99	0.000130	8.40	5625.81	1590.24	0.32
D100-00-00_0008	43489	10PCT_10yr	30892.00	0.81	32.77		33.97	0.000203	8.79	3515.61	215.00	0.38
D100-00-00_0008	43489	2PCT_50yr	34791.00	0.81	35.33		36.45	0.000174	8.50	4285.86	685.90	0.36
D100-00-00_0008	43489	1PCT_100yr	36807.00	0.81	36.55		37.63	0.000156	8.38	4797.69	835.04	0.34
D100-00-00_0008	43489	0.2PCT_500yr	41557.00	0.81	38.88		39.95	0.000132	8.35	5880.65	1672.28	0.32
D100-00-00_0008	42650	10PCT_10yr	32102.00	0.57	32.48		33.79	0.000214	9.15	3507.52	209.09	0.39
D100-00-00_0008	42650	2PCT_50yr	36320.00	0.57	35.05		36.29	0.000188	8.92	4069.88	228.94	0.37
D100-00-00_0008	42650	1PCT_100yr	38484.00	0.57	36.27		37.48	0.000175	8.84	4355.41	345.24	0.36
D100-00-00_0008	42650	0.2PCT_500yr	44397.00	0.57	38.54		39.81	0.000163	9.06	5136.95	1551.02	0.36
D100-00-00_0008	41240	10PCT_10yr	32102.00	0.49	32.25		33.47	0.000198	8.87	3618.89	414.39	0.38
D100-00-00_0008	41240	2PCT_50yr	36320.00	0.49	34.85		36.01	0.000172	8.65	4203.40	1332.41	0.36
D100-00-00_0008	41240	1PCT_100yr	38484.00	0.49	36.08		37.22	0.000162	8.56	4612.12	1845.44	0.35
D100-00-00_0008	41240	0.2PCT_500yr	44397.00	0.49	38.38		39.56	0.000148	8.74	5657.32	2647.95	0.34
D100-00-00_0008	40038	10PCT_10yr	32102.00	-1.58	32.11		33.21	0.000175	8.44	3852.62	373.69	0.36
D100-00-00_0008	40038	2PCT_50yr	36320.00	-1.58	34.75		35.78	0.000149	8.16	5215.43	1464.45	0.33
D100-00-00_0008	40038	1PCT_100yr	38484.00	-1.58	36.01		37.00	0.000132	8.06	5976.47	1504.81	0.32
D100-00-00_0008	40038	0.2PCT_500yr	44397.00	-1.58	38.33		39.36	0.000119	8.21	7420.74	2259.36	0.31
D100-00-00_0008	39300	10PCT_10yr	32102.00	-1.96	31.99		33.08	0.000175	8.38	3871.50	281.83	0.36
D100-00-00_0008	39300	2PCT_50yr	36320.00	-1.96	34.64		35.67	0.000149	8.13	4790.19	475.32	0.33
D100-00-00_0008	39300	1PCT_100yr	38484.00	-1.96	35.91		36.91	0.000133	8.03	5434.63	643.00	0.32
D100-00-00_0008	39300	0.2PCT_500yr	44397.00	-1.96	38.23		39.27	0.000120	8.22	6678.62	1238.45	0.31
D100-00-00_0008	38191	10PCT_10yr	32102.00	-2.59	31.96		32.84	0.000143	7.53	4268.30	280.59	0.32
D100-00-00_0008	38191	2PCT_50yr	36320.00	-2.59	34.64		35.47	0.000113	7.31	5178.11	365.05	0.29
D100-00-00_0008	38191	1PCT_100yr	38484.00	-2.59	35.91		36.72	0.000103	7.26	5679.69	510.49	0.28
D100-00-00_0008	38191	0.2PCT_500yr	44397.00	-2.59	38.24		39.10	0.000094	7.47	7003.32	1029.56	0.28
D100-00-00_0008	37914	10PCT_10yr	32102.00	-2.59	31.91	19.37	32.80	0.000147	7.56	4248.85	257.32	0.33
D100-00-00_0008	37914	2PCT_50yr	36320.00	-2.59	34.60	20.59	35.43	0.000127	7.30	4972.65	474.55	0.31
D100-00-00_0008	37914	1PCT_100yr	38484.00	-2.59	35.88	21.16	36.68	0.000120	7.20	5356.45	830.55	0.30
D100-00-00_0008	37914	0.2PCT_500yr	44397.00	-2.59	38.22	22.53	39.05	0.000107	7.31	6360.57	1764.55	0.29

HEC-RAS Plan: Prop River: D100-00-00 Reach: D100-00-00_0008 (Continued)

Reach	River Sta	Profile	Q Total	Min Ch El	W.S. Elev	Crit W.S.	E.G. Elev	E.G. Slope	Vel Chnl	Flow Area	Top Width	Froude # Chl
			(cfs)	(ft)	(ft)	(ft)	(ft)	(ft/ft)	(ft/s)	(sq ft)	(ft)	
D100-00-00_0008	37867		Bridge									
D100-00-00_0008	37795	10PCT_10yr	32102.00	-2.59	31.64		32.55	0.000151	7.67	4184.48	251.87	0.33
D100-00-00_0008	37795	2PCT_50yr	36320.00	-2.59	34.39		35.24	0.000127	7.40	4910.05	274.61	0.31
D100-00-00_0008	37795	1PCT_100yr	38484.00	-2.59	35.67		36.50	0.000117	7.31	5270.21	405.60	0.30
D100-00-00_0008	37795	0.2PCT_500yr	44397.00	-2.59	37.86		38.73	0.000111	7.51	6256.24	1092.04	0.29
D100-00-00_0008	36304	10PCT_10yr	32912.00	-4.12	31.30		32.31	0.000147	8.04	4389.68	343.53	0.33
D100-00-00_0008	36304	2PCT_50yr	37400.00	-4.12	34.07		35.02	0.000121	7.87	5618.55	524.42	0.31
D100-00-00_0008	36304	1PCT_100yr	39577.00	-4.12	35.37		36.30	0.000110	7.79	6319.85	666.10	0.29
D100-00-00_0008	36304	0.2PCT_500yr	45556.00	-4.12	37.54		38.54	0.000105	8.10	7593.46	1362.69	0.29
D100-00-00_0008	35047	10PCT_10yr	32912.00	-4.76	31.08		32.11	0.000150	8.17	4239.54	644.92	0.33
D100-00-00_0008	35047	2PCT_50yr	37400.00	-4.76	33.88		34.86	0.000127	7.98	5616.83	1065.04	0.31
D100-00-00_0008	35047	1PCT_100yr	39577.00	-4.76	35.21		36.16	0.000116	7.88	6624.55	1650.15	0.30
D100-00-00_0008	35047	0.2PCT_500yr	45556.00	-4.76	37.41		38.40	0.000111	8.07	8474.89	2844.02	0.30
D100-00-00_0008	33975	10PCT_10yr	32912.00	-3.48	31.00		31.93	0.000132	7.79	5323.31	464.51	0.32
D100-00-00_0008	33975	2PCT_50yr	37400.00	-3.48	33.83		34.70	0.000114	7.59	6815.64	1130.82	0.30
D100-00-00_0008	33975	1PCT_100yr	39577.00	-3.48	35.17		36.01	0.000103	7.47	7722.59	1434.81	0.28
D100-00-00_0008	33975	0.2PCT_500yr	45556.00	-3.48	37.38		38.25	0.000096	7.69	9377.58	2990.49	0.28
D100-00-00_0008	33053	10PCT_10yr	32912.00	-6.53	30.99		31.78	0.000110	7.16	4860.95	392.61	0.29
D100-00-00_0008	33053	2PCT_50yr	37400.00	-6.53	33.81		34.58	0.000089	7.04	6397.78	953.04	0.27
D100-00-00_0008	33053	1PCT_100yr	39577.00	-6.53	35.15		35.90	0.000080	6.98	7306.33	1129.60	0.26
D100-00-00_0008	33053	0.2PCT_500yr	45556.00	-6.53	37.35		38.15	0.000077	7.25	8805.05	2807.84	0.25
D100-00-00_0008	32783	10PCT_10yr	32912.00	-6.53	31.02	15.21	31.69	0.000104	6.53	5045.92	371.20	0.28
D100-00-00_0008	32783	2PCT_50yr	37400.00	-6.53	33.87	16.69	34.48	0.000081	6.30	6965.54	1061.40	0.25
D100-00-00_0008	32783	1PCT_100yr	39577.00	-6.53	35.21	17.33	35.80	0.000072	6.20	7987.19	1233.76	0.24
D100-00-00_0008	32783	0.2PCT_500yr	45556.00	-6.53	37.42	18.88	38.04	0.000067	6.39	9676.12	3490.15	0.23
D100-00-00_0008	32718		Bridge									
D100-00-00_0008	32654	10PCT_10yr	32912.00	-6.53	30.31		31.26	0.000133	7.82	4446.03	293.32	0.31
D100-00-00_0008	32654	2PCT_50yr	37400.00	-6.53	32.77		33.72	0.000117	7.85	5404.63	632.07	0.30
D100-00-00_0008	32654	1PCT_100yr	39577.00	-6.53	34.03		34.97	0.000107	7.80	6420.06	996.98	0.29
D100-00-00_0008	32654	0.2PCT_500yr	45556.00	-6.53	36.53		37.48	0.000096	7.93	8675.75	2174.51	0.28
D100-00-00_0008	32444	10PCT_10yr	32912.00	-3.14	30.43		31.04	0.000414	6.27	5246.91	257.71	0.25
D100-00-00_0008	32444	2PCT_50yr	37400.00	-3.14	32.90		33.52	0.000396	6.33	5978.72	447.92	0.24
D100-00-00_0008	32444	1PCT_100yr	39577.00	-3.14	34.16		34.77	0.000375	6.30	6924.41	931.91	0.24
D100-00-00_0008	32444	0.2PCT_500yr	45556.00	-3.14	36.67		37.28	0.000331	6.36	9329.55	1881.36	0.23
D100-00-00_0008	31614	10PCT_10yr	32912.00	-3.14	30.08		30.69	0.000436	6.31	6062.23	628.90	0.25
D100-00-00_0008	31614	2PCT_50yr	37400.00	-3.14	32.61		33.19	0.000363	6.24	8098.34	995.75	0.23
D100-00-00_0008	31614	1PCT_100yr	39577.00	-3.14	33.91		34.47	0.000326	6.14	9520.76	1225.25	0.22
D100-00-00_0008	31614	0.2PCT_500yr	45556.00	-3.14	36.47		37.00	0.000281	6.10	13235.38	2555.83	0.21
D100-00-00_0008	31444	10PCT_10yr	32912.00	-2.12	30.11		30.59	0.000311	5.60	6104.78	438.64	0.21
D100-00-00_0008	31444	2PCT_50yr	37400.00	-2.12	32.62		33.11	0.000271	5.64	7907.64	1129.80	0.20
D100-00-00_0008	31444	1PCT_100yr	39577.00	-2.12	33.92		34.39	0.000247	5.58	9544.28	1329.84	0.20
D100-00-00_0008	31444	0.2PCT_500yr	45556.00	-2.12	36.48		36.94	0.000219	5.61	13496.76	2810.72	0.19
D100-00-00_0008	31142	10PCT_10yr	32912.00	-2.12	30.02	13.50	30.48	0.000336	5.47	6016.26	312.91	0.22
D100-00-00_0008	31142	2PCT_50yr	37400.00	-2.12	32.55	14.47	33.01	0.000310	5.46	7058.74	746.59	0.21
D100-00-00_0008	31142	1PCT_100yr	39577.00	-2.12	33.85	14.91	34.30	0.000290	5.40	8281.53	1114.49	0.21
D100-00-00_0008	31142	0.2PCT_500yr	45556.00	-2.12	36.42	16.06	36.86	0.000253	5.39	12271.85	2959.20	0.20
D100-00-00_0008	31085		Bridge									
D100-00-00_0008	31029	10PCT_10yr	32912.00	-2.12	29.72		30.16	0.000332	5.30	6215.31	337.09	0.22
D100-00-00_0008	31029	2PCT_50yr	37400.00	-2.12	32.45		32.87	0.000288	5.21	7727.69	991.19	0.21
D100-00-00_0008	31029	1PCT_100yr	39577.00	-2.12	33.66		34.06	0.000267	5.15	9223.16	1535.25	0.20
D100-00-00_0008	31029	0.2PCT_500yr	45556.00	-2.12	36.14		36.53	0.000238	5.12	13671.67	2799.11	0.19
D100-00-00_0008	30935	10PCT_10yr	32912.00	-2.12	29.63		30.11	0.000351	5.59	6302.39	555.78	0.23
D100-00-00_0008	30935	2PCT_50yr	37400.00	-2.12	32.38		32.83	0.000297	5.45	8609.77	1197.94	0.21
D100-00-00_0008	30935	1PCT_100yr	39577.00	-2.12	33.59		34.03	0.000273	5.38	10331.98	1557.86	0.20
D100-00-00_0008	30935	0.2PCT_500yr	45556.00	-2.12	36.09		36.50	0.000233	5.34	14768.74	3005.59	0.19
D100-00-00_0008	30831	10PCT_10yr	32912.00	-2.12	29.56	13.19	30.07	0.000368	5.82	7564.71	776.89	0.23
D100-00-00_0008	30831	2PCT_50yr	37400.00	-2.12	32.34	14.24	32.79	0.000315	5.62	10090.70	1211.74	0.22
D100-00-00_0008	30831	1PCT_100yr	39577.00	-2.12	33.55	14.73	34.00	0.000308	5.57	11846.22	1598.20	0.21
D100-00-00_0008	30831	0.2PCT_500yr	45556.00	-2.12	36.06	16.03	36.48	0.000258	5.48	16381.35	2762.48	0.20
D100-00-00_0008	30825		Bridge									
D100-00-00_0008	30820	10PCT_10yr	32912.00	-2.12	29.48		30.00	0.000416	5.95	7645.84	796.94	0.24
D100-00-00_0008	30820	2PCT_50yr	37400.00	-2.12	32.21		32.68	0.000350	5.72	10148.48	1168.16	0.22
D100-00-00_0008	30820	1PCT_100yr	39577.00	-2.12	33.48		33.93	0.000331	5.65	11953.80	1587.26	0.22

HEC-RAS Plan: Prop River: D100-00-00 Reach: D100-00-00_0008 (Continued)

Reach	River Sta	Profile	Q Total	Min Ch El	W.S. Elev	Crit W.S.	E.G. Elev	E.G. Slope	Vel Chnl	Flow Area	Top Width	Froude # Chl
			(cfs)	(ft)	(ft)	(ft)	(ft)	(ft/ft)	(ft/s)	(sq ft)	(ft)	
D100-00-00_0008	30820	0.2PCT_500yr	45556.00	-2.12	35.98		36.40	0.000275	5.54	16403.44	2643.67	0.20
D100-00-00_0008	30499	10PCT_10yr	32912.00	-2.12	29.34		29.87	0.000426	6.01	7534.04	787.43	0.24
D100-00-00_0008	30499	2PCT_50yr	37400.00	-2.12	32.10		32.57	0.000356	5.75	10020.77	1091.16	0.23
D100-00-00_0008	30499	1PCT_100yr	39577.00	-2.12	33.37		33.83	0.000338	5.69	11783.52	1562.13	0.22
D100-00-00_0008	30499	0.2PCT_500yr	45556.00	-2.12	35.91		36.32	0.000274	5.52	16328.67	2507.19	0.20
D100-00-00_0008	29990	10PCT_10yr	32912.00	-5.55	29.22		29.66	0.000307	5.47	7603.33	611.62	0.21
D100-00-00_0008	29990	2PCT_50yr	37400.00	-5.55	31.98		32.40	0.000274	5.33	9640.99	828.19	0.20
D100-00-00_0008	29990	1PCT_100yr	39577.00	-5.55	33.26		33.67	0.000250	5.29	10782.22	1006.54	0.19
D100-00-00_0008	29990	0.2PCT_500yr	45556.00	-5.55	35.77		36.20	0.000232	5.45	14564.59	2218.02	0.19
D100-00-00_0008	29616	10PCT_10yr	32912.00	-5.55	29.10		29.55	0.000302	5.36	6176.38	379.01	0.21
D100-00-00_0008	29616	2PCT_50yr	37400.00	-5.55	31.86		32.30	0.000269	5.32	7589.92	840.48	0.20
D100-00-00_0008	29616	1PCT_100yr	39577.00	-5.55	33.14		33.57	0.000248	5.28	8635.58	1235.72	0.19
D100-00-00_0008	29616	0.2PCT_500yr	45556.00	-5.55	35.68		36.11	0.000222	5.36	11970.04	2527.71	0.19
D100-00-00_0008	29258	10PCT_10yr	32912.00	-6.59	29.08	8.71	29.38	0.000241	4.45	7399.14	411.94	0.19
D100-00-00_0008	29258	2PCT_50yr	37400.00	-6.59	31.85	9.75	32.14	0.000202	4.35	9364.32	1028.36	0.17
D100-00-00_0008	29258	1PCT_100yr	39577.00	-6.59	33.14	10.23	33.42	0.000186	4.28	10861.38	1290.60	0.17
D100-00-00_0008	29258	0.2PCT_500yr	45556.00	-6.59	35.69	11.49	35.96	0.000164	4.24	15583.52	2669.26	0.16
D100-00-00_0008	29243		Bridge									
D100-00-00_0008	29236	10PCT_10yr	32912.00	1.60	28.65		29.25	0.000374	6.28	5585.99	465.20	0.24
D100-00-00_0008	29236	2PCT_50yr	37400.00	1.60	31.43		32.02	0.000313	6.23	7922.71	1565.98	0.22
D100-00-00_0008	29236	1PCT_100yr	39577.00	1.60	32.76		33.32	0.000282	6.13	9653.96	1869.60	0.21
D100-00-00_0008	29236	0.2PCT_500yr	45556.00	1.60	35.32		35.86	0.000248	6.13	13693.04	2701.29	0.20
D100-00-00_0008	28978	10PCT_10yr	32912.00	-12.60	28.74		29.01	0.000245	4.38	11979.22	1469.21	0.18
D100-00-00_0008	28978	2PCT_50yr	37400.00	-12.60	31.55		31.78	0.000194	4.07	16524.14	2025.48	0.17
D100-00-00_0008	28978	1PCT_100yr	39577.00	-12.60	32.88		33.08	0.000176	3.92	19199.62	2239.49	0.16
D100-00-00_0008	28978	0.2PCT_500yr	45556.00	-12.60	35.46		35.63	0.000147	3.72	24966.66	2552.14	0.15
D100-00-00_0008	28931	10PCT_10yr	32912.00	-12.60	28.51	7.85	28.95	0.000276	5.32	7005.09	629.03	0.20
D100-00-00_0008	28931	2PCT_50yr	37400.00	-12.60	31.29	9.11	31.71	0.000231	5.28	9217.35	993.27	0.19
D100-00-00_0008	28931	1PCT_100yr	39577.00	-12.60	32.60	9.89	33.01	0.000212	5.23	10633.92	1141.32	0.18
D100-00-00_0008	28931	0.2PCT_500yr	45556.00	-12.60	35.14	11.58	35.55	0.000192	5.31	13871.38	1361.12	0.18
D100-00-00_0008	28897		Bridge									
D100-00-00_0008	28864	10PCT_10yr	32912.00	-12.60	28.43		28.89	0.000276	5.45	6346.54	335.97	0.20
D100-00-00_0008	28864	2PCT_50yr	37400.00	-12.60	31.19		31.65	0.000255	5.47	7600.78	673.81	0.20
D100-00-00_0008	28864	1PCT_100yr	39577.00	-12.60	32.49		32.95	0.000236	5.45	8645.12	917.32	0.19
D100-00-00_0008	28864	0.2PCT_500yr	45556.00	-12.60	35.00		35.46	0.000219	5.59	11380.66	1295.89	0.19
D100-00-00_0008	28685	10PCT_10yr	32912.00	-12.60	28.36	7.93	28.83	0.000295	5.54	5936.45	266.56	0.21
D100-00-00_0008	28685	2PCT_50yr	37400.00	-12.60	31.11	9.31	31.59	0.000273	5.59	6685.59	277.94	0.20
D100-00-00_0008	28685	1PCT_100yr	39577.00	-12.60	32.40	9.90	32.89	0.000263	5.61	7049.17	283.24	0.20
D100-00-00_0008	28685	0.2PCT_500yr	45556.00	-12.60	34.87	11.47	35.40	0.000274	5.87	7763.35	300.50	0.20
D100-00-00_0008	28640		Bridge									
D100-00-00_0008	28622	10PCT_10yr	32912.00	-12.60	28.19		28.73	0.000428	5.92	5559.34	314.06	0.24
D100-00-00_0008	28622	2PCT_50yr	37400.00	-12.60	30.98		31.49	0.000383	5.76	6881.50	609.53	0.23
D100-00-00_0008	28622	1PCT_100yr	39577.00	-12.60	32.29		32.79	0.000353	5.67	7734.41	724.58	0.22
D100-00-00_0008	28622	0.2PCT_500yr	45556.00	-12.60	34.78		35.27	0.000332	5.67	9790.76	1278.34	0.22
D100-00-00_0008	28252	10PCT_10yr	32912.00	-12.60	28.12		28.55	0.000279	5.29	6538.13	452.85	0.20
D100-00-00_0008	28252	2PCT_50yr	37400.00	-12.60	30.91		31.34	0.000235	5.27	8060.89	703.16	0.19
D100-00-00_0008	28252	1PCT_100yr	39577.00	-12.60	32.23		32.65	0.000217	5.25	9096.44	873.92	0.18
D100-00-00_0008	28252	0.2PCT_500yr	45556.00	-12.60	34.72		35.15	0.000201	5.38	11841.46	1429.76	0.18
D100-00-00_0008	27788	10PCT_10yr	33478.00	-12.60	27.86		28.39	0.000361	5.87	5702.78	276.79	0.23
D100-00-00_0008	27788	2PCT_50yr	38159.00	-12.60	30.67		31.20	0.000331	5.84	6956.66	716.44	0.22
D100-00-00_0008	27788	1PCT_100yr	40344.00	-12.60	32.01		32.52	0.000312	5.76	8414.28	1577.20	0.21
D100-00-00_0008	27788	0.2PCT_500yr	46368.00	-12.60	34.55		35.03	0.000282	5.73	11724.14	1991.16	0.21
D100-00-00_0008	26715	10PCT_10yr	33478.00	-12.69	27.41		27.99	0.000381	6.15	5656.82	402.59	0.23
D100-00-00_0008	26715	2PCT_50yr	38159.00	-12.69	30.27		30.85	0.000320	6.13	7186.95	799.34	0.22
D100-00-00_0008	26715	1PCT_100yr	40344.00	-12.69	31.63		32.19	0.000293	6.08	8185.96	1556.91	0.21
D100-00-00_0008	26715	0.2PCT_500yr	46368.00	-12.69	34.16		34.73	0.000270	6.21	10133.85	2648.00	0.21
D100-00-00_0008	25614	10PCT_10yr	33478.00	-10.37	26.96		27.56	0.000407	6.22	5800.66	535.18	0.24
D100-00-00_0008	25614	2PCT_50yr	38159.00	-10.37	29.92		30.49	0.000328	6.09	7613.17	681.18	0.22
D100-00-00_0008	25614	1PCT_100yr	40344.00	-10.37	31.32		31.86	0.000297	6.02	8604.30	773.76	0.21
D100-00-00_0008	25614	0.2PCT_500yr	46368.00	-10.37	33.87		34.42	0.000269	6.12	10644.56	1599.62	0.21
D100-00-00_0008	25321	10PCT_10yr	33478.00	-10.37	26.83	8.56	27.43	0.000415	6.26	5730.51	530.92	0.24
D100-00-00_0008	25321	2PCT_50yr	38159.00	-10.37	29.81	10.04	30.39	0.000334	6.13	7541.65	676.82	0.22
D100-00-00_0008	25321	1PCT_100yr	40344.00	-10.37	31.22	10.68	31.77	0.000301	6.04	8532.09	763.82	0.21

HEC-RAS Plan: Prop River: D100-00-00 Reach: D100-00-00_0008 (Continued)

Reach	River Sta	Profile	Q Total	Min Ch El	W.S. Elev	Crit W.S.	E.G. Elev	E.G. Slope	Vel Chnl	Flow Area	Top Width	Froude # Chl
			(cfs)	(ft)	(ft)	(ft)	(ft)	(ft/ft)	(ft/s)	(sq ft)	(ft)	
D100-00-00_0008	25321	0.2PCT_500yr	46368.00	-10.37	33.79	12.65	34.34	0.000272	6.14	10576.08	1590.69	0.21
D100-00-00_0008	25316		Bridge									
D100-00-00_0008	25311	10PCT_10yr	33478.00	-10.37	26.62		27.25	0.000428	6.33	5623.59	523.86	0.25
D100-00-00_0008	25311	2PCT_50yr	38159.00	-10.37	29.70		30.28	0.000340	6.16	7466.34	672.22	0.23
D100-00-00_0008	25311	1PCT_100yr	40344.00	-10.37	31.15		31.70	0.000304	6.06	8477.46	735.02	0.22
D100-00-00_0008	25311	0.2PCT_500yr	46368.00	-10.37	33.77		34.33	0.000273	6.14	10557.94	1582.90	0.21
D100-00-00_0008	24997	10PCT_10yr	33478.00	-11.77	26.66		27.01	0.000245	4.77	7339.65	540.59	0.19
D100-00-00_0008	24997	2PCT_50yr	38159.00	-11.77	29.75		30.08	0.000203	4.64	9352.64	740.06	0.18
D100-00-00_0008	24997	1PCT_100yr	40344.00	-11.77	31.20		31.51	0.000181	4.57	10503.47	881.38	0.17
D100-00-00_0008	24997	0.2PCT_500yr	46368.00	-11.77	33.83		34.15	0.000161	4.63	12961.57	1522.09	0.16
D100-00-00_0008	24726	10PCT_10yr	33478.00	-11.77	26.36	8.84	26.88	0.000357	5.82	6120.76	391.30	0.23
D100-00-00_0008	24726	2PCT_50yr	38159.00	-11.77	29.46	9.99	29.96	0.000284	5.71	8051.64	835.32	0.21
D100-00-00_0008	24726	1PCT_100yr	40344.00	-11.77	30.93	10.50	31.41	0.000253	5.61	9305.72	919.14	0.20
D100-00-00_0008	24726	0.2PCT_500yr	46368.00	-11.77	33.58	11.82	34.05	0.000226	5.67	11822.28	1509.90	0.19
D100-00-00_0008	24697		Bridge									
D100-00-00_0008	24668	10PCT_10yr	33478.00	-11.77	26.23		26.75	0.000381	5.79	6000.21	442.05	0.23
D100-00-00_0008	24668	2PCT_50yr	38159.00	-11.77	29.22		29.71	0.000300	5.66	7564.46	714.27	0.21
D100-00-00_0008	24668	1PCT_100yr	40344.00	-11.77	30.65		31.12	0.000269	5.58	8759.62	1036.19	0.20
D100-00-00_0008	24668	0.2PCT_500yr	46368.00	-11.77	33.42		33.88	0.000232	5.59	11539.94	1406.78	0.19
D100-00-00_0008	24312	10PCT_10yr	33478.00	-11.77	26.05		26.60	0.000374	5.98	5663.50	325.07	0.23
D100-00-00_0008	24312	2PCT_50yr	38159.00	-11.77	29.05		29.59	0.000306	5.92	6902.51	657.35	0.22
D100-00-00_0008	24312	1PCT_100yr	40344.00	-11.77	30.48		31.01	0.000278	5.87	7819.79	1091.54	0.21
D100-00-00_0008	24312	0.2PCT_500yr	46368.00	-11.77	33.24		33.77	0.000247	5.93	10434.49	1885.15	0.20
D100-00-00_0008	24046	10PCT_10yr	33478.00	-11.77	25.89		26.49	0.000389	6.28	6119.38	580.93	0.24
D100-00-00_0008	24046	2PCT_50yr	38159.00	-11.77	28.94		29.51	0.000312	6.15	8293.54	837.74	0.22
D100-00-00_0008	24046	1PCT_100yr	40344.00	-11.77	30.40		30.93	0.000279	6.04	9525.95	902.48	0.21
D100-00-00_0008	24046	0.2PCT_500yr	46368.00	-11.77	33.18		33.71	0.000246	6.06	11909.45	1994.27	0.20
D100-00-00_0008	23789	10PCT_10yr	33478.00	-7.29	25.74		26.39	0.000419	6.48	5872.88	501.30	0.25
D100-00-00_0008	23789	2PCT_50yr	38159.00	-7.29	28.82		29.42	0.000367	6.29	7740.92	692.21	0.24
D100-00-00_0008	23789	1PCT_100yr	40344.00	-7.29	30.29		30.85	0.000323	6.15	8788.10	881.47	0.22
D100-00-00_0008	23789	0.2PCT_500yr	46368.00	-7.29	33.09		33.64	0.000278	6.15	10808.85	1666.91	0.21
D100-00-00_0008	23527	10PCT_10yr	33478.00	-7.29	25.61	9.52	26.27	0.000468	6.49	5328.24	553.84	0.26
D100-00-00_0008	23527	2PCT_50yr	38159.00	-7.29	28.73	10.59	29.32	0.000361	6.22	7928.99	1384.43	0.23
D100-00-00_0008	23527	1PCT_100yr	40344.00	-7.29	30.22	11.07	30.76	0.000312	6.05	9415.47	1602.09	0.22
D100-00-00_0008	23527	0.2PCT_500yr	46368.00	-7.29	33.04	12.34	33.55	0.000262	5.97	12240.09	2365.71	0.20
D100-00-00_0008	23488		Bridge									
D100-00-00_0008	23449	10PCT_10yr	33478.00	-7.29	25.41		26.10	0.000448	6.66	5135.08	456.27	0.26
D100-00-00_0008	23449	2PCT_50yr	38159.00	-7.29	28.33		28.98	0.000364	6.52	7676.66	1429.38	0.23
D100-00-00_0008	23449	1PCT_100yr	40344.00	-7.29	29.84		30.44	0.000318	6.34	9217.05	1637.50	0.22
D100-00-00_0008	23449	0.2PCT_500yr	46368.00	-7.29	32.80		33.35	0.000265	6.24	12253.79	2239.20	0.21
D100-00-00_0008	22782	10PCT_10yr	33478.00	-13.33	25.15		25.78	0.000420	6.34	5423.68	347.84	0.25
D100-00-00_0008	22782	2PCT_50yr	38159.00	-13.33	28.11		28.72	0.000344	6.27	6597.06	824.49	0.23
D100-00-00_0008	22782	1PCT_100yr	40344.00	-13.33	29.64		30.22	0.000308	6.19	7675.46	1977.51	0.22
D100-00-00_0008	22782	0.2PCT_500yr	46368.00	-13.33	32.59		33.17	0.000267	6.20	9999.51	2742.99	0.21
D100-00-00_0008	22550	10PCT_10yr	33478.00	-11.02	25.07	8.43	25.65	0.000485	6.10	5485.07	323.01	0.26
D100-00-00_0008	22550	2PCT_50yr	38159.00	-11.02	28.06	9.58	28.61	0.000368	5.92	6734.15	988.40	0.23
D100-00-00_0008	22550	1PCT_100yr	40344.00	-11.02	29.60	10.10	30.11	0.000319	5.78	7831.18	1204.39	0.22
D100-00-00_0008	22550	0.2PCT_500yr	46368.00	-11.02	32.57	11.57	33.07	0.000264	5.72	10334.23	2315.74	0.20
D100-00-00_0008	22470		Bridge									
D100-00-00_0008	22390	10PCT_10yr	33478.00	-11.02	24.87		25.46	0.000501	6.18	5419.61	318.53	0.26
D100-00-00_0008	22390	2PCT_50yr	38159.00	-11.02	27.81		28.37	0.000385	6.00	6501.23	689.74	0.24
D100-00-00_0008	22390	1PCT_100yr	40344.00	-11.02	29.23		29.77	0.000339	5.90	7447.96	1070.87	0.22
D100-00-00_0008	22390	0.2PCT_500yr	46368.00	-11.02	32.04		32.57	0.000286	5.88	9792.86	2168.64	0.21
D100-00-00_0008	21953	10PCT_10yr	35602.00	-11.40	24.33		25.15	0.000572	7.29	4885.56	249.88	0.29
D100-00-00_0008	21953	2PCT_50yr	41293.00	-11.40	27.25		28.09	0.000520	7.36	5715.03	590.96	0.28
D100-00-00_0008	21953	1PCT_100yr	43864.00	-11.40	28.67		29.50	0.000480	7.33	6175.97	860.80	0.27
D100-00-00_0008	21953	0.2PCT_500yr	50878.00	-11.40	31.43		32.31	0.000440	7.55	7412.97	1792.90	0.26
D100-00-00_0008	21626	10PCT_10yr	35602.00	-11.40	24.22		24.94	0.000537	6.81	5230.65	286.29	0.28
D100-00-00_0008	21626	2PCT_50yr	41293.00	-11.40	27.17		27.89	0.000445	6.81	6362.76	1176.01	0.26
D100-00-00_0008	21626	1PCT_100yr	43864.00	-11.40	28.62		29.32	0.000401	6.75	7224.18	1459.39	0.25
D100-00-00_0008	21626	0.2PCT_500yr	50878.00	-11.40	31.41		32.13	0.000358	6.88	9260.12	2127.98	0.24
D100-00-00_0008	21379	10PCT_10yr	35602.00	-22.87	24.03	3.13	24.80	0.000478	7.03	5083.89	344.58	0.26

HEC-RAS Plan: Prop River: D100-00-00 Reach: D100-00-00_0008 (Continued)

Reach	River Sta	Profile	Q Total	Min Ch El	W.S. Elev	Crit W.S.	E.G. Elev	E.G. Slope	Vel Chnl	Flow Area	Top Width	Froude # Chl
			(cfs)	(ft)	(ft)	(ft)	(ft)	(ft/ft)	(ft/s)	(sq ft)	(ft)	
D100-00-00_0008	21379	2PCT_50yr	41293.00	-22.87	26.98	5.04	27.77	0.000441	7.13	6678.63	1146.73	0.25
D100-00-00_0008	21379	1PCT_100yr	43864.00	-22.87	28.45	5.84	29.21	0.000400	7.06	7785.88	1213.54	0.24
D100-00-00_0008	21379	0.2PCT_500yr	50878.00	-22.87	31.27	7.78	32.03	0.000361	7.18	9912.35	1899.55	0.24
D100-00-00_0008	21331		Bridge									
D100-00-00_0008	21277	10PCT_10yr	35602.00	-22.87	23.42		24.23	0.000500	7.20	4961.00	234.88	0.27
D100-00-00_0008	21277	2PCT_50yr	41293.00	-22.87	25.97		26.84	0.000492	7.47	5842.28	709.94	0.27
D100-00-00_0008	21277	1PCT_100yr	43864.00	-22.87	27.29		28.16	0.000461	7.49	6604.25	941.17	0.26
D100-00-00_0008	21277	0.2PCT_500yr	50878.00	-22.87	30.15		31.04	0.000417	7.64	8573.23	1294.32	0.25
D100-00-00_0008	21124	10PCT_10yr	35602.00	-22.87	23.43		24.08	0.000420	6.48	5561.53	300.34	0.25
D100-00-00_0008	21124	2PCT_50yr	41293.00	-22.87	25.99		26.69	0.000386	6.70	6631.99	562.68	0.24
D100-00-00_0008	21124	1PCT_100yr	43864.00	-22.87	27.32		28.01	0.000361	6.71	7389.52	582.60	0.23
D100-00-00_0008	21124	0.2PCT_500yr	50878.00	-22.87	30.18		30.90	0.000330	6.88	9130.24	715.32	0.23
D100-00-00_0008	20678	10PCT_10yr	35602.00	-14.56	23.14		23.87	0.000528	6.82	5265.63	326.52	0.27
D100-00-00_0008	20678	2PCT_50yr	41293.00	-14.56	25.74		26.49	0.000474	6.98	6217.42	444.43	0.26
D100-00-00_0008	20678	1PCT_100yr	43864.00	-14.56	27.08		27.83	0.000438	6.97	6732.38	575.18	0.25
D100-00-00_0008	20678	0.2PCT_500yr	50878.00	-14.56	29.94		30.73	0.000398	7.17	7868.25	765.56	0.24
D100-00-00_0008	20369	10PCT_10yr	35602.00	-13.60	22.86		23.69	0.000564	7.29	4970.49	369.06	0.29
D100-00-00_0008	20369	2PCT_50yr	41293.00	-13.60	25.46		26.33	0.000505	7.47	5715.68	537.96	0.28
D100-00-00_0008	20369	1PCT_100yr	43864.00	-13.60	26.81		27.67	0.000469	7.48	6119.40	648.41	0.27
D100-00-00_0008	20369	0.2PCT_500yr	50878.00	-13.60	29.67		30.59	0.000432	7.73	7017.32	820.93	0.26
D100-00-00_0008	19984	10PCT_10yr	35602.00	-13.60	22.73	7.50	23.37	0.000604	6.40	5559.80	355.08	0.29
D100-00-00_0008	19984	2PCT_50yr	41293.00	-13.60	25.39	9.09	26.01	0.000514	6.32	6534.60	377.22	0.27
D100-00-00_0008	19984	1PCT_100yr	43864.00	-13.60	26.76	9.78	27.36	0.000464	6.21	7059.51	386.81	0.26
D100-00-00_0008	19984	0.2PCT_500yr	50878.00	-13.60	29.67	11.54	30.27	0.000395	6.19	8263.07	1374.10	0.24
D100-00-00_0008	19830		Bridge									
D100-00-00_0008	19676	10PCT_10yr	35602.00	-13.60	21.71		22.38	0.000647	6.55	5436.01	449.73	0.29
D100-00-00_0008	19676	2PCT_50yr	41293.00	-13.60	24.37		25.02	0.000529	6.46	6390.66	554.87	0.27
D100-00-00_0008	19676	1PCT_100yr	43864.00	-13.60	25.63		26.27	0.000488	6.40	6853.64	578.11	0.26
D100-00-00_0008	19676	0.2PCT_500yr	50878.00	-13.60	28.33		28.98	0.000430	6.45	7908.63	833.34	0.25
D100-00-00_0008	19298	10PCT_10yr	35602.00	-13.60	21.13		22.04	0.000817	7.62	4670.00	286.78	0.33
D100-00-00_0008	19298	2PCT_50yr	41293.00	-13.60	23.85		24.73	0.000701	7.50	5646.08	587.77	0.31
D100-00-00_0008	19298	1PCT_100yr	43864.00	-13.60	25.15		25.99	0.000622	7.41	6376.92	732.53	0.30
D100-00-00_0008	19298	0.2PCT_500yr	50878.00	-13.60	27.91		28.74	0.000518	7.39	8053.89	971.78	0.28
D100-00-00_0008	18545	10PCT_10yr	35602.00	-15.41	20.72		21.47	0.000595	6.92	5141.10	283.78	0.29
D100-00-00_0008	18545	2PCT_50yr	41293.00	-15.41	23.48		24.22	0.000553	6.91	6028.39	373.03	0.28
D100-00-00_0008	18545	1PCT_100yr	43864.00	-15.41	24.81		25.54	0.000502	6.85	6600.74	525.07	0.27
D100-00-00_0008	18545	0.2PCT_500yr	50878.00	-15.41	27.63		28.36	0.000426	6.88	8590.54	974.22	0.25
D100-00-00_0008	17780	10PCT_10yr	35602.00	-17.97	20.46		21.08	0.000358	6.48	7593.97	675.13	0.23
D100-00-00_0008	17780	2PCT_50yr	41293.00	-17.97	23.25		23.87	0.000322	6.57	9600.33	768.22	0.22
D100-00-00_0008	17780	1PCT_100yr	43864.00	-17.97	24.61		25.21	0.000300	6.55	10704.80	923.81	0.22
D100-00-00_0008	17780	0.2PCT_500yr	50878.00	-17.97	27.46		28.07	0.000274	6.67	13208.48	1077.63	0.21
D100-00-00_0008	16169	10PCT_10yr	35602.00	-14.46	19.55		20.35	0.000562	7.22	5549.14	551.24	0.28
D100-00-00_0008	16169	2PCT_50yr	41293.00	-14.46	22.44		23.23	0.000468	7.22	6817.60	622.95	0.27
D100-00-00_0008	16169	1PCT_100yr	43864.00	-14.46	23.85		24.62	0.000427	7.17	7446.43	666.70	0.26
D100-00-00_0008	16169	0.2PCT_500yr	50878.00	-14.46	26.73		27.52	0.000385	7.34	8761.29	739.10	0.25
D100-00-00_0008	15153	10PCT_10yr	35602.00	-17.85	18.97		19.73	0.000646	7.00	5275.19	498.10	0.30
D100-00-00_0008	15153	2PCT_50yr	41293.00	-17.85	22.00		22.71	0.000512	6.79	6882.17	581.70	0.27
D100-00-00_0008	15153	1PCT_100yr	43864.00	-17.85	23.48		24.15	0.000446	6.65	7868.77	713.14	0.26
D100-00-00_0008	15153	0.2PCT_500yr	50878.00	-17.85	26.44		27.10	0.000375	6.65	10260.47	974.18	0.24
D100-00-00_0008	14911	10PCT_10yr	35602.00	-17.85	18.48	3.39	19.49	0.000732	8.03	4431.35	222.87	0.32
D100-00-00_0008	14911	2PCT_50yr	41293.00	-17.85	21.47	4.88	22.48	0.000675	8.05	5143.62	267.10	0.31
D100-00-00_0008	14911	1PCT_100yr	43864.00	-17.85	22.94	5.53	23.93	0.000608	7.98	5647.60	437.99	0.30
D100-00-00_0008	14911	0.2PCT_500yr	50878.00	-17.85	25.90	7.18	26.89	0.000526	8.06	7948.54	1111.28	0.28
D100-00-00_0008	14870		Bridge									
D100-00-00_0008	14793	10PCT_10yr	35602.00	-17.85	18.12		19.01	0.000685	7.57	4703.70	251.49	0.31
D100-00-00_0008	14793	2PCT_50yr	41293.00	-17.85	20.69		21.60	0.000656	7.67	5414.02	342.97	0.30
D100-00-00_0008	14793	1PCT_100yr	43864.00	-17.85	21.92		22.83	0.000603	7.66	5900.85	440.46	0.30
D100-00-00_0008	14793	0.2PCT_500yr	50878.00	-17.85	24.70		25.63	0.000524	7.76	7905.45	1061.20	0.28
D100-00-00_0008	14560	10PCT_10yr	35602.00	-17.85	18.08		18.78	0.000460	6.80	6598.45	642.66	0.26
D100-00-00_0008	14560	2PCT_50yr	41293.00	-17.85	20.68		21.37	0.000399	6.84	8494.13	854.62	0.25
D100-00-00_0008	14560	1PCT_100yr	43864.00	-17.85	21.93		22.61	0.000369	6.81	9654.36	978.27	0.24
D100-00-00_0008	14560	0.2PCT_500yr	50878.00	-17.85	24.74		25.40	0.000326	6.87	12588.82	1100.08	0.23
D100-00-00_0008	14058	10PCT_10yr	35602.00	-17.51	17.68		18.51	0.000578	7.51	6048.63	675.54	0.29

HEC-RAS Plan: Prop River: D100-00-00 Reach: D100-00-00_0008 (Continued)

Reach	River Sta	Profile	Q Total	Min Ch El	W.S. Elev	Crit W.S.	E.G. Elev	E.G. Slope	Vel Chnl	Flow Area	Top Width	Froude # Chl
			(cfs)	(ft)	(ft)	(ft)	(ft)	(ft/ft)	(ft/s)	(sq ft)	(ft)	
D100-00-00_0008	14058	2PCT_50yr	41293.00	-17.51	20.31		21.13	0.000501	7.53	8053.66	817.66	0.27
D100-00-00_0008	14058	1PCT_100yr	43864.00	-17.51	21.59		22.39	0.000460	7.47	9121.21	848.44	0.26
D100-00-00_0008	14058	0.2PCT_500yr	50878.00	-17.51	24.42		25.21	0.000407	7.55	11637.62	985.94	0.25
D100-00-00_0008	13527	10PCT_10yr	35602.00	-18.03	17.33		18.19	0.000609	7.54	5491.69	469.81	0.30
D100-00-00_0008	13527	2PCT_50yr	41293.00	-18.03	19.99		20.86	0.000526	7.60	6893.05	582.11	0.28
D100-00-00_0008	13527	1PCT_100yr	43864.00	-18.03	21.28		22.13	0.000486	7.57	7676.87	634.20	0.27
D100-00-00_0008	13527	0.2PCT_500yr	50878.00	-18.03	24.11		24.98	0.000432	7.69	9697.13	793.11	0.26
D100-00-00_0008	12161	10PCT_10yr	37545.00	-15.55	16.63		17.34	0.000570	7.32	9020.43	845.06	0.29
D100-00-00_0008	12161	2PCT_50yr	44124.00	-15.55	19.45		20.12	0.000469	7.24	11493.94	920.14	0.26
D100-00-00_0008	12161	1PCT_100yr	47258.00	-15.55	20.78		21.45	0.000436	7.25	12771.48	992.60	0.26
D100-00-00_0008	12161	0.2PCT_500yr	55389.00	-15.55	23.67		24.36	0.000397	7.45	16063.78	1349.97	0.25
D100-00-00_0008	11228	10PCT_10yr	37545.00	-14.96	16.09		16.76	0.000593	6.77	7677.90	841.73	0.29
D100-00-00_0008	11228	2PCT_50yr	44124.00	-14.96	19.04		19.65	0.000448	6.54	10254.94	985.25	0.26
D100-00-00_0008	11228	1PCT_100yr	47258.00	-14.96	20.43		21.01	0.000396	6.43	11561.78	1017.88	0.24
D100-00-00_0008	11228	0.2PCT_500yr	55389.00	-14.96	23.41		23.96	0.000331	6.40	14518.85	1291.32	0.23
D100-00-00_0008	10615	10PCT_10yr	37545.00	-17.98	15.53		16.36	0.000678	7.31	5138.78	379.52	0.31
D100-00-00_0008	10615	2PCT_50yr	44124.00	-17.98	18.49		19.32	0.000556	7.33	6357.51	730.75	0.28
D100-00-00_0008	10615	1PCT_100yr	47258.00	-17.98	19.88		20.71	0.000509	7.33	7056.05	818.69	0.28
D100-00-00_0008	10615	0.2PCT_500yr	55389.00	-17.98	22.84		23.69	0.000448	7.48	8579.84	1016.80	0.26
D100-00-00_0008	10377	10PCT_10yr	37545.00	-17.98	15.25	-0.17	16.17	0.000673	7.72	4867.42	256.40	0.31
D100-00-00_0008	10377	2PCT_50yr	44124.00	-17.98	18.19	1.42	19.15	0.000579	7.86	5892.41	564.82	0.29
D100-00-00_0008	10377	1PCT_100yr	47258.00	-17.98	19.59	2.07	20.55	0.000539	7.89	6521.51	682.50	0.28
D100-00-00_0008	10377	0.2PCT_500yr	55389.00	-17.98	22.52	3.71	23.53	0.000491	8.14	7846.66	795.49	0.28
D100-00-00_0008	10347		Bridge									
D100-00-00_0008	10318	10PCT_10yr	37545.00	-17.98	15.05		16.00	0.000671	7.78	4847.54	273.33	0.31
D100-00-00_0008	10318	2PCT_50yr	44124.00	-17.98	17.72		18.70	0.000660	7.99	5870.06	609.89	0.31
D100-00-00_0008	10318	1PCT_100yr	47258.00	-17.98	18.96		19.95	0.000619	8.04	6420.35	680.06	0.30
D100-00-00_0008	10318	0.2PCT_500yr	55389.00	-17.98	22.03		23.04	0.000539	8.18	7779.23	878.38	0.29
D100-00-00_0008	10097	10PCT_10yr	37545.00	-17.98	14.98		15.78	0.000640	7.21	5237.02	458.38	0.30
D100-00-00_0008	10097	2PCT_50yr	44124.00	-17.98	17.66		18.50	0.000556	7.36	6171.01	799.42	0.29
D100-00-00_0008	10097	1PCT_100yr	47258.00	-17.98	18.90		19.76	0.000522	7.42	6661.91	832.11	0.28
D100-00-00_0008	10097	0.2PCT_500yr	55389.00	-17.98	21.98		22.87	0.000457	7.58	7871.93	954.87	0.27
D100-00-00_0008	9432	10PCT_10yr	37545.00	-24.77	14.62		15.39	0.000531	7.03	5343.43	310.10	0.27
D100-00-00_0008	9432	2PCT_50yr	44124.00	-24.77	17.31		18.13	0.000523	7.26	6079.19	361.44	0.28
D100-00-00_0008	9432	1PCT_100yr	47258.00	-24.77	18.57		19.41	0.000516	7.34	6450.75	392.38	0.27
D100-00-00_0008	9432	0.2PCT_500yr	55389.00	-24.77	21.68		22.55	0.000491	7.49	7685.07	917.84	0.27
D100-00-00_0008	9098	10PCT_10yr	37545.00	-18.78	14.51		15.20	0.000438	6.67	5632.37	260.89	0.25
D100-00-00_0008	9098	2PCT_50yr	44124.00	-18.78	17.20		17.95	0.000443	6.94	6356.64	279.47	0.26
D100-00-00_0008	9098	1PCT_100yr	47258.00	-18.78	18.46		19.23	0.000448	7.04	6750.84	431.82	0.26
D100-00-00_0008	9098	0.2PCT_500yr	55389.00	-18.78	21.58		22.37	0.000458	7.14	8635.19	773.10	0.26
D100-00-00_0008	8826	10PCT_10yr	37545.00	-18.78	14.36	-2.38	15.07	0.000446	6.78	5706.23	400.98	0.25
D100-00-00_0008	8826	2PCT_50yr	44124.00	-18.78	17.07	-0.94	17.82	0.000455	7.02	6985.70	553.24	0.26
D100-00-00_0008	8826	1PCT_100yr	47258.00	-18.78	18.34	-0.31	19.10	0.000456	7.07	7734.01	627.76	0.26
D100-00-00_0008	8826	0.2PCT_500yr	55389.00	-18.78	21.47	1.22	22.23	0.000418	7.11	10189.66	1000.25	0.25
D100-00-00_0008	8794		Bridge									
D100-00-00_0008	8762	10PCT_10yr	37545.00	-18.78	14.21		14.88	0.000426	6.66	6884.79	611.28	0.25
D100-00-00_0008	8762	2PCT_50yr	44124.00	-18.78	16.83		17.52	0.000425	6.82	8612.04	706.72	0.25
D100-00-00_0008	8762	1PCT_100yr	47258.00	-18.78	18.02		18.71	0.000425	6.86	9482.86	753.31	0.25
D100-00-00_0008	8762	0.2PCT_500yr	55389.00	-18.78	20.98		21.67	0.000382	6.91	11969.37	1025.34	0.24
D100-00-00_0008	8452	10PCT_10yr	37545.00	-18.78	14.24		14.63	0.000311	5.15	10967.69	1294.07	0.21
D100-00-00_0008	8452	2PCT_50yr	44124.00	-18.78	16.90		17.25	0.000262	5.05	14633.68	1437.16	0.20
D100-00-00_0008	8452	1PCT_100yr	47258.00	-18.78	18.10		18.44	0.000246	4.99	16374.35	1488.68	0.19
D100-00-00_0008	8452	0.2PCT_500yr	55389.00	-18.78	21.09		21.40	0.000199	4.88	20875.52	1581.69	0.18
D100-00-00_0008	7918	10PCT_10yr	37545.00	-18.78	13.67		14.39	0.000455	6.83	5771.99	330.86	0.26
D100-00-00_0008	7918	2PCT_50yr	44124.00	-18.78	16.25		17.03	0.000438	7.12	6777.60	463.66	0.26
D100-00-00_0008	7918	1PCT_100yr	47258.00	-18.78	17.42		18.22	0.000425	7.24	7332.63	488.99	0.26
D100-00-00_0008	7918	0.2PCT_500yr	55389.00	-18.78	20.35		21.20	0.000393	7.50	9288.75	885.73	0.25
D100-00-00_0008	6676	10PCT_10yr	37545.00	-21.19	13.06		13.80	0.000491	6.90	5438.83	262.24	0.27
D100-00-00_0008	6676	2PCT_50yr	44124.00	-21.19	15.64		16.44	0.000505	7.18	6143.85	285.40	0.27
D100-00-00_0008	6676	1PCT_100yr	47258.00	-21.19	16.82		17.64	0.000515	7.29	6486.42	299.61	0.28
D100-00-00_0008	6676	0.2PCT_500yr	55389.00	-21.19	19.77		20.63	0.000533	7.45	7570.62	681.67	0.28
D100-00-00_0008	6087	10PCT_10yr	37545.00	-21.47	12.70		13.50	0.000542	7.15	5252.98	259.12	0.28
D100-00-00_0008	6087	2PCT_50yr	44124.00	-21.47	15.27		16.13	0.000552	7.42	5947.67	281.32	0.28
D100-00-00_0008	6087	1PCT_100yr	47258.00	-21.47	16.44		17.32	0.000560	7.52	6283.35	294.80	0.29

HEC-RAS Plan: Prop River: D100-00-00 Reach: D100-00-00_0008 (Continued)

Reach	River Sta	Profile	Q Total	Min Ch El	W.S. Elev	Crit W.S.	E.G. Elev	E.G. Slope	Vel Chnl	Flow Area	Top Width	Froude # Chl
			(cfs)	(ft)	(ft)	(ft)	(ft)	(ft/ft)	(ft/s)	(sq ft)	(ft)	
D100-00-00_0008	6087	0.2PCT_500yr	55389.00	-21.47	19.38		20.30	0.000581	7.68	7263.04	512.77	0.29
D100-00-00_0008	5859	10PCT_10yr	37545.00	-21.47	12.60	-2.92	13.35	0.000525	6.97	5647.85	614.26	0.28
D100-00-00_0008	5859	2PCT_50yr	44124.00	-21.47	15.19	-1.41	15.98	0.000475	7.19	6767.82	734.94	0.27
D100-00-00_0008	5859	1PCT_100yr	47258.00	-21.47	16.36	-0.73	17.17	0.000457	7.29	7313.31	930.23	0.26
D100-00-00_0008	5859	0.2PCT_500yr	55389.00	-21.47	19.30	0.83	20.15	0.000413	7.50	8837.25	1417.95	0.26
D100-00-00_0008	5845		Bridge									
D100-00-00_0008	5832	10PCT_10yr	37545.00	-21.47	12.35		13.21	0.000466	7.47	5517.93	574.00	0.27
D100-00-00_0008	5832	2PCT_50yr	44124.00	-21.47	14.86		15.81	0.000455	7.89	6519.85	857.28	0.27
D100-00-00_0008	5832	1PCT_100yr	47258.00	-21.47	15.99		16.98	0.000450	8.07	7024.82	883.82	0.27
D100-00-00_0008	5832	0.2PCT_500yr	55389.00	-21.47	18.74		19.82	0.000439	8.48	8318.25	1245.81	0.27
D100-00-00_0008	5654	10PCT_10yr	37545.00	-21.47	12.28		13.10	0.000558	7.26	5173.60	360.20	0.28
D100-00-00_0008	5654	2PCT_50yr	44124.00	-21.47	14.80		15.69	0.000573	7.56	5835.35	411.38	0.29
D100-00-00_0008	5654	1PCT_100yr	47258.00	-21.47	15.94		16.85	0.000587	7.68	6155.11	438.33	0.29
D100-00-00_0008	5654	0.2PCT_500yr	55389.00	-21.47	18.71		19.68	0.000588	7.91	7195.25	898.46	0.30
D100-00-00_0008	4111	10PCT_10yr	37545.00	-21.35	11.77		12.35	0.000357	6.24	8099.78	887.95	0.23
D100-00-00_0008	4111	2PCT_50yr	44124.00	-21.35	14.34		14.94	0.000335	6.41	9962.99	1128.92	0.22
D100-00-00_0008	4111	1PCT_100yr	47258.00	-21.35	15.50		16.10	0.000323	6.48	10835.15	1215.11	0.22
D100-00-00_0008	4111	0.2PCT_500yr	55389.00	-21.35	18.33		18.95	0.000299	6.67	13084.51	1412.06	0.22
D100-00-00_0008	3429	10PCT_10yr	37545.00	-19.62	11.48		12.09	0.000401	6.25	6147.35	345.05	0.24
D100-00-00_0008	3429	2PCT_50yr	44124.00	-19.62	14.03		14.69	0.000378	6.53	7120.78	415.94	0.24
D100-00-00_0008	3429	1PCT_100yr	47258.00	-19.62	15.18		15.86	0.000368	6.65	7617.78	478.26	0.24
D100-00-00_0008	3429	0.2PCT_500yr	55389.00	-19.62	17.98		18.72	0.000348	6.95	9204.40	1054.47	0.23
D100-00-00_0008	2574	10PCT_10yr	37545.00	-19.41	10.95		11.70	0.000477	6.93	5418.78	437.87	0.26
D100-00-00_0008	2574	2PCT_50yr	44124.00	-19.41	13.48		14.29	0.000533	7.24	6102.36	797.86	0.28
D100-00-00_0008	2574	1PCT_100yr	47258.00	-19.41	14.64		15.48	0.000517	7.34	6450.69	1328.71	0.28
D100-00-00_0008	2574	0.2PCT_500yr	55389.00	-19.41	17.45		18.35	0.000487	7.62	7307.79	1982.32	0.27
D100-00-00_0008	2185	10PCT_10yr	37545.00	-19.41	10.86		11.45	0.000549	6.18	6070.63	383.80	0.27
D100-00-00_0008	2185	2PCT_50yr	44124.00	-19.41	13.42		14.02	0.000526	6.20	7112.86	530.21	0.27
D100-00-00_0008	2185	1PCT_100yr	47258.00	-19.41	14.61		15.20	0.000512	6.18	7649.07	1007.74	0.27
D100-00-00_0008	2185	0.2PCT_500yr	55389.00	-19.41	17.49		18.08	0.000427	6.16	9071.04	1930.93	0.25
D100-00-00_0008	1888	10PCT_10yr	37545.00	-19.76	10.55	-4.82	11.26	0.000552	6.74	5568.91	307.98	0.28
D100-00-00_0008	1888	2PCT_50yr	44124.00	-19.76	13.08	-3.40	13.82	0.000528	6.92	6372.21	327.62	0.28
D100-00-00_0008	1888	1PCT_100yr	47258.00	-19.76	14.24	-2.76	15.00	0.000514	6.99	6758.11	493.21	0.27
D100-00-00_0008	1888	0.2PCT_500yr	55389.00	-19.76	17.09	-1.09	17.88	0.000478	7.16	7738.95	1241.44	0.27
D100-00-00_0008	1871		Bridge									
D100-00-00_0008	1855	10PCT_10yr	37545.00	-19.76	10.26		11.12	0.000522	7.46	5148.90	308.92	0.27
D100-00-00_0008	1855	2PCT_50yr	44124.00	-19.76	12.71		13.67	0.000531	7.88	5940.09	334.51	0.28
D100-00-00_0008	1855	1PCT_100yr	47258.00	-19.76	13.84		14.84	0.000530	8.05	6324.58	343.28	0.28
D100-00-00_0008	1855	0.2PCT_500yr	55389.00	-19.76	16.62		17.71	0.000527	8.43	7313.22	1139.57	0.28
D100-00-00_0008	1410	10PCT_10yr	37545.00	-19.76	9.99	-4.80	10.88	0.000543	7.56	4980.65	240.59	0.28
D100-00-00_0008	1410	2PCT_50yr	44124.00	-19.76	12.42	-3.39	13.42	0.000536	8.02	5620.27	327.67	0.28
D100-00-00_0008	1410	1PCT_100yr	47258.00	-19.76	13.55	-2.76	14.59	0.000529	8.21	6068.85	673.84	0.28
D100-00-00_0008	1410	0.2PCT_500yr	55389.00	-19.76	16.33	-1.24	17.46	0.000510	8.61	7507.23	1575.30	0.28
D100-00-00_0008	1367		Bridge									
D100-00-00_0008	1324	10PCT_10yr	37545.00	-19.76	9.62		10.54	0.000571	7.68	4954.50	300.68	0.29
D100-00-00_0008	1324	2PCT_50yr	44124.00	-19.76	12.07		13.08	0.000573	8.10	5726.53	347.47	0.29
D100-00-00_0008	1324	1PCT_100yr	47258.00	-19.76	13.21		14.26	0.000574	8.27	6111.43	405.17	0.29
D100-00-00_0008	1324	0.2PCT_500yr	55389.00	-19.76	16.01		17.15	0.000575	8.62	7202.43	1365.09	0.30
D100-00-00_0008	760	10PCT_10yr	37545.00	-19.76	9.25	-4.80	10.20	0.000601	7.81	4847.48	272.92	0.29
D100-00-00_0008	760	2PCT_50yr	44124.00	-19.76	11.69	-3.39	12.74	0.000600	8.24	5603.26	330.89	0.30
D100-00-00_0008	760	1PCT_100yr	47258.00	-19.76	12.83	-2.76	13.92	0.000600	8.40	5981.93	377.15	0.30
D100-00-00_0008	760	0.2PCT_500yr	55389.00	-19.76	15.63	-1.24	16.81	0.000600	8.76	6986.61	1320.53	0.30

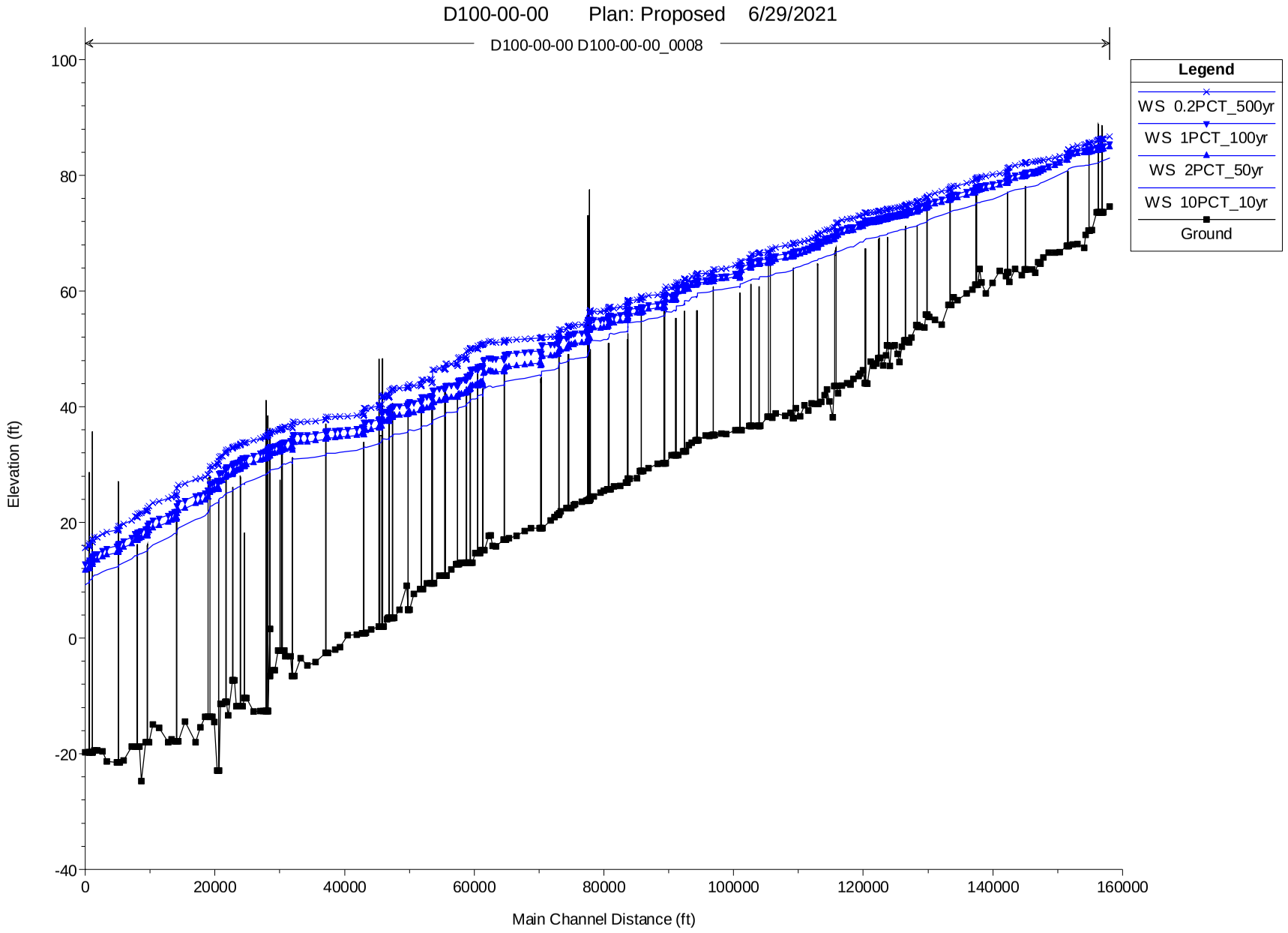
D100-00-00 Plan: Proposed 6/29/2021
D100-00-00 D100-00-00_0008
Legend
WS 0.2PCT_500yr
WS 1PCT_100yr
WS 2PCT_50yr
WS 10PCT_10yr
Ground
Elevation (ft)
Main Channel Distance (ft)
100
80
60
40
20
0
-20
-40
0
20000
40000
60000
80000
100000
120000
140000
160000

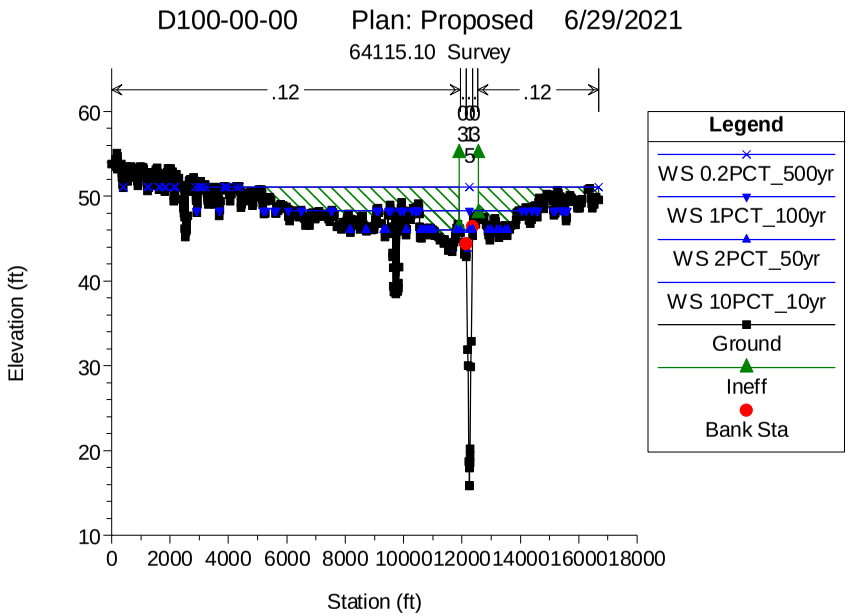
D100-00-00 Plan: Proposed 6/29/2021
64115.10 Survey
.12
.12
Elevation (ft)
Station (ft)
Legend
WS 0.2PCT_500yr
WS 1PCT_100yr
WS 2PCT_50yr
WS 10PCT_10yr
Ground
Ineff
Bank Sta

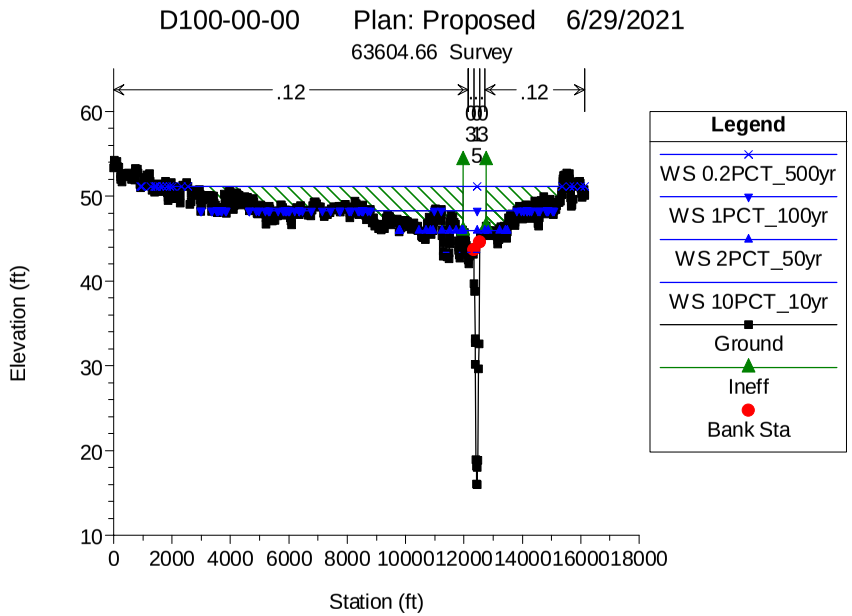
D100-00-00 Plan: Proposed 6/29/2021
63604.66 Survey
.12
.12
Elevation (ft)
Station (ft)
Legend
WS 0.2PCT_500yr
WS 1PCT_100yr
WS 2PCT_50yr
WS 10PCT_10yr
Ground
Ineff
Bank Sta

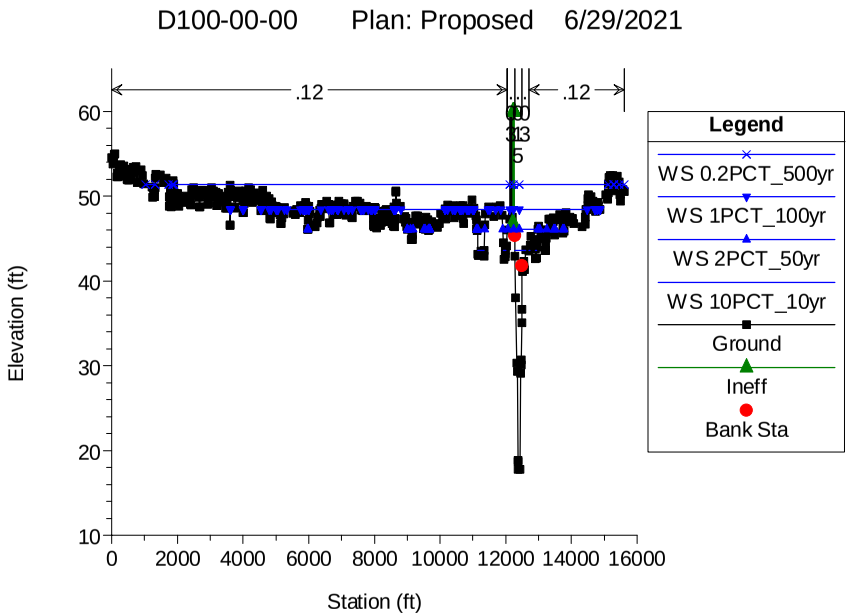
D100-00-00 Plan: Proposed 6/29/2021
.12
.12
Elevation (ft)
Station (ft)
Legend
WS 0.2PCT_500yr
WS 1PCT_100yr
WS 2PCT_50yr
WS 10PCT_10yr
Ground
Ineff
Bank Sta

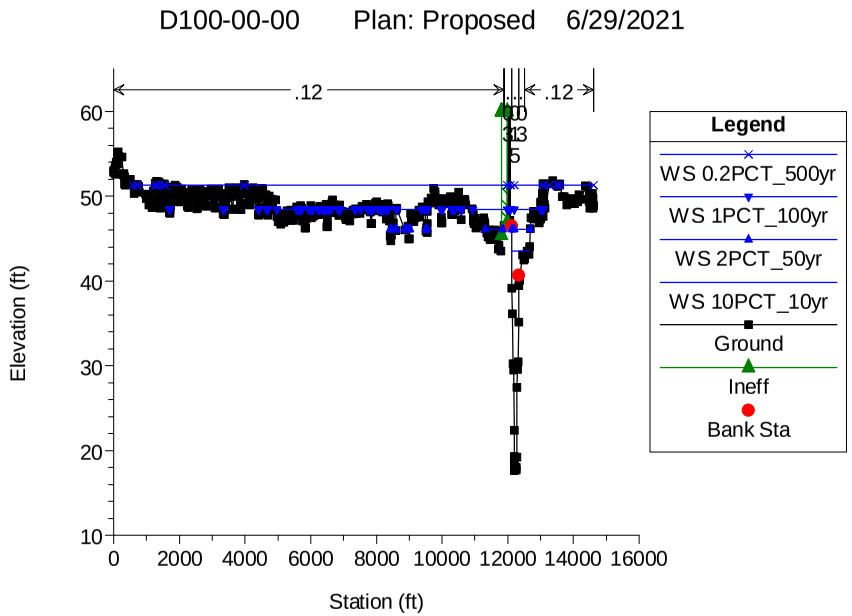
D100-00-00 Plan: Proposed 6/29/2021
.12
.12
Elevation (ft)
Station (ft)
Legend
WS 0.2PCT_500yr
WS 1PCT_100yr
WS 2PCT_50yr
WS 10PCT_10yr
Ground
Ineff
Bank Sta

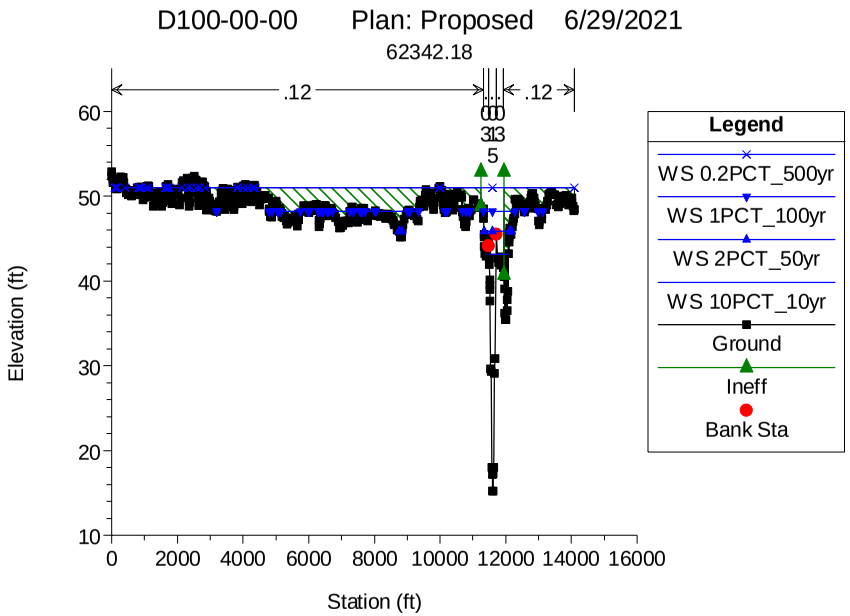
D100-00-00 Plan: Proposed 6/29/2021
62342.18
.12
.12
Elevation (ft)
Station (ft)
Legend
WS 0.2PCT_500yr
WS 1PCT_100yr
WS 2PCT_50yr
WS 10PCT_10yr
Ground
Ineff
Bank Sta

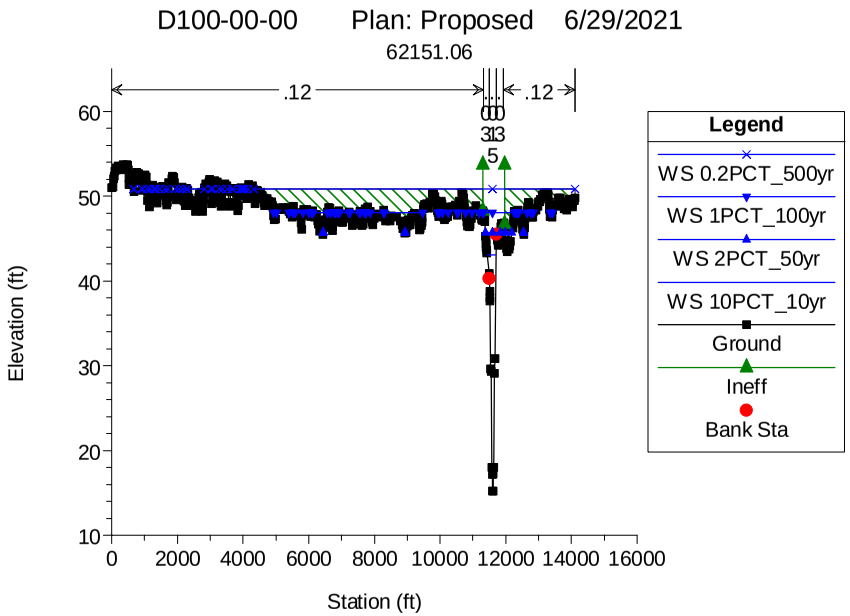
D100-00-00 Plan: Proposed 6/29/2021
62151.06
.12
.12
Elevation (ft)
Station (ft)
Legend
WS 0.2PCT_500yr
WS 1PCT_100yr
WS 2PCT_50yr
WS 10PCT_10yr
Ground
Ineff
Bank Sta

Appendix I: Electrical Diagrams

EAST BUILDING SITE

PLAN

1"=20'-0"

KGL
Kalluri Group, Inc.

Kimley»Horn

THIS DOCUMENT IS INCOMPLETE AND IS NOT INTENDED TO BE USED FOR INTERIM REVIEW, BIDDING, OR PERMIT PURPOSES.

SERIAL NO.:
DATE:

WEST UNIVERSITY
WWTP IMPROVEMENTS

EXHIBIT ES-1
SITE PLAN
EAST OPTION

DATE: JULY 2021
DESIGN: WAH
DRAWN: MRH
CHECKED: WAH
KHA NO.: 067814-002

SHEET

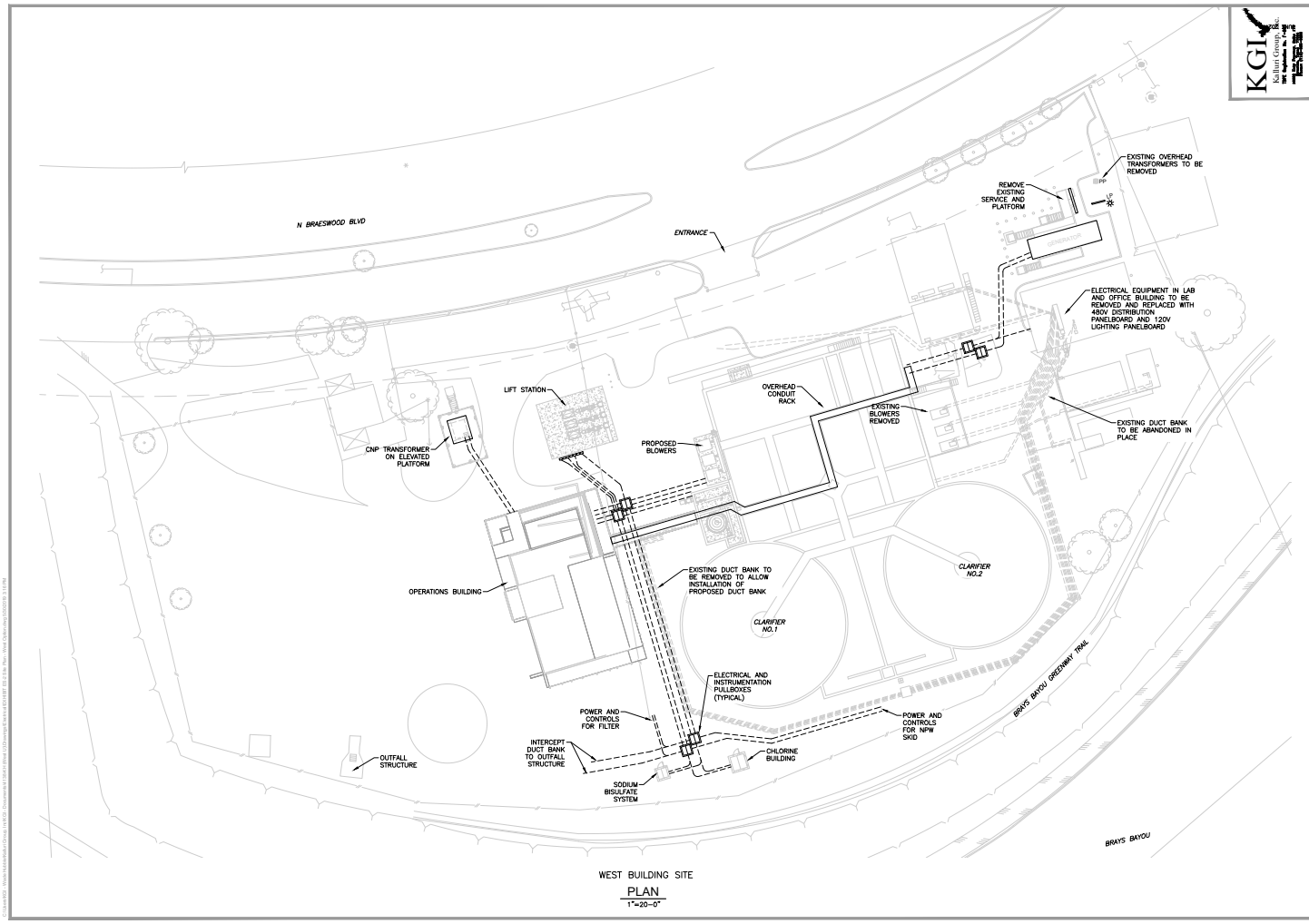

WEST BUILDING SITE

PLAN

1"=20'-0"

KGI Kalluri Group, Inc.

Kimley»Horn

No.	Revision	By	Date

THIS DOCUMENT IS INCOMPLETE AND IS RELEASED TEMPORARILY FOR INTERIM REVIEW ONLY. IT IS NOT INTENDED FOR CONSTRUCTION, BIDDING, OR PERMIT PURPOSES.

SERIAL NO.

DATE:

WEST UNIVERSITY
WWTP IMPROVEMENTS

EXHIBIT ES-2
ELECTRICAL SITE PLAN
WEST OPTION

DATE:	JULY 2021
DESIGN:	WAH
DRAWN:	MRH
CHECKED:	WAH
KHA NO.:	067812102

SHEET

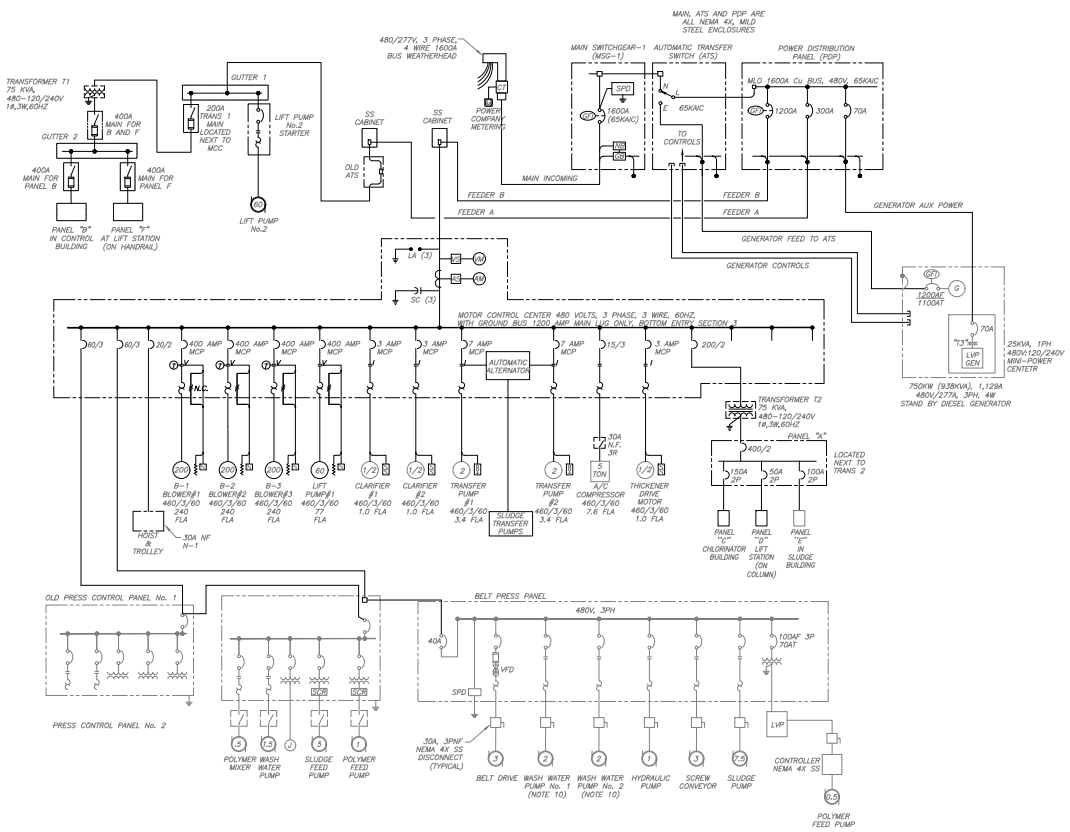

EXISTING OVERALL

ONE LINE DIAGRAM

NONE

GENERAL NOTES:

A. ALL EQUIPMENT SHOWN IS EXISTING. EQUIPMENT SHOWN IN BOLD IS TO BE REMOVED.

KGL
Kallurt Group, Inc.
TBPE Registration No. F-3837

Kimley»Horn
TBPE Reg. No. 528
No. | Revision | By | Date

THIS DOCUMENT IS INCOMPLETE AND IS RELEASED FOR REVIEW PURPOSES ONLY. IT IS NOT TO BE USED FOR BIDDING, OR PERMIT PURPOSES.
SERIAL NO.
DATE:

WEST UNIVERSITY
WWTP IMPROVEMENTS

EXHIBIT E-1
ONE LINE DIAGRAM
EXISTING

DATE: JULY 2021
DESIGN: WAH
DRAWN: MRH
CHECKED: WAH
KHA NO.: 067814162

SHEET

Existing	Proposed	Process Area Description	Tag No.	Equipment Description	Load Value	Units (HP, FLA, KVA)	Voltage	Phase	Controller Type - FVNR, RVSS, ASD, Feeder, Etc	Notes	Running Load Factor (zero to 1)	Load Type	Connected Load (Amps)	Connected Load (kVA)	Running Load (Amps)	Running Load (kVA)	Standby Power? (Y/N)
✓	-	BELT PRESS BUILDING	BP-CP-1	OLD PRESS CONTROL PANEL #1	25	FLA	480	3	FEEDER	CONTROL PANEL COMBINED LOAD	1	Motor	25	21	25	21	Y
✓	-	BELT PRESS BUILDING	BP-CP-2	PRESS CONTROL PANEL #2	25	FLA	480	3	FEEDER	CONTROL PANEL COMBINED LOAD	1	Motor	25	21	25	21	Y
✓	-	BELT PRESS BUILDING	BP-CP-3	BELT PRESS PANEL	50	FLA	480	3	FEEDER	CONTROL PANEL COMBINED LOAD	1	Motor	50	42	50	42	Y
✓	-	BELT PRESS BUILDING	PNL 'E'	PANELBOARD 'E'	25	KVA	480	3	FEEDER	PANELBOARD FEEDER	1	Lighting	30	25	30	25	Y
-	✓	BELT PRESS BUILDING	PNL 'BPH'	PANELBOARD 'BPH'	75	FLA	480	3	FEEDER	EXCESS CAPACITY ALLOWANCE	1	Other	75	62	75	62	Y
-	✓	LAB & OFFICE BUILDING	PNL 'OPBH'	PANELBOARD 'OPBH'	125	FLA	480	3	FEEDER	EXCESS CAPACITY ALLOWANCE	1	Other	125	104	125	104	Y
-	✓	LAB & OFFICE BUILDING	PNL 'OPBL'	PANELBOARD 'OPBL'	37.5	KVA	480	1	FEEDER	FED FROM 'OPBH'	1	Other	78	38	78	38	Y
-	✓	LIFT STATION	LS-1	LIFT STATION PUMP 1	45	HP	480	3	ASD		1	Motor	52	43	52	43	Y
-	✓	LIFT STATION	LS-2	LIFT STATION PUMP 2	45	HP	480	3	ASD		1	Motor	52	43	52	43	Y
-	✓	LIFT STATION	LS-3	LIFT STATION PUMP 3	45	HP	480	3	ASD		0	Motor	52	43	0	0	N
-	✓	OPERATIONS BUILDING	PNL 'OPBH'	PANELBOARD 'OPBH'	200	FLA	480	3	FEEDER	MISC. BLDG 480V LOADS	0.5	Other	200	166	100	83	Y
-	✓	OPERATIONS BUILDING	PNL 'OPBL'	PANELBOARD 'OPBL'	75	KVA	480	3	FEEDER	MISC. BLDG 120V LOADS	1	Other	90	75	90	75	Y
✓	-	PROCESS AREA	CL-1	CLARIFIER 1	0.5	HP	480	3	FVNR		1	Motor	1	1	1	1	Y
✓	-	PROCESS AREA	CL-2	CLARIFIER 2	0.5	HP	480	3	FVNR		1	Motor	1	1	1	1	Y
✓	-	PROCESS AREA	TH-1	THICKENER 1	0.5	HP	480	3	FVNR		1	Motor	1	1	1	1	Y
-	✓	PROCESS AREA	B-1	BLOWER 1	100	HP	480	3	FVNR		1	Motor	124	103	124	103	Y
-	✓	PROCESS AREA	B-2	BLOWER 2	100	HP	480	3	FVNR		1	Motor	124	103	124	103	Y
-	✓	PROCESS AREA	B-3	BLOWER 3	100	HP	480	3	FVNR		1	Motor	124	103	124	103	N
-	✓	PROCESS AREA	BS-1	BAR SCREEN	2	HP	480	3	FVNR		0	Motor	3	3	0	0	Y
-	✓	PROCESS AREA	BSPR-1	BAR SCREEN PRESS	5	HP	480	3	FVNR		1	Motor	8	6	8	6	Y
-	✓	PROCESS AREA	GP-1	GRIT PUMP	7.5	HP	480	3	FVNR		1	Motor	11	9	11	9	Y
-	✓	PROCESS AREA	GPR-1	GRIT PRESS	2	HP	480	3	FVNR		1	Motor	3	3	3	3	Y
-	✓	PROCESS AREA	NPWP-1	NPW PUMP 1	7.5	HP	480	3	FVNR		1	Motor	11	9	11	9	Y
-	✓	PROCESS AREA	NPWP-2	NPW PUMP 2	7.5	HP	480	3	FVNR		1	Motor	11	9	11	9	Y
-	✓	PROCESS AREA	NPWP-3	NPW PUMP 3	7.5	HP	480	3	FVNR		1	Motor	11	9	11	9	N
-	✓	PROCESS AREA	RASP-1	RAS PUMP 1	10	HP	480	3	FVNR		1	Motor	14	12	14	12	Y
-	✓	PROCESS AREA	RASP-2	RAS PUMP 2	10	HP	480	3	FVNR		1	Motor	14	12	14	12	Y
-	✓	PROCESS AREA	RASP-3	RAS PUMP 3	10	HP	480	3	FVNR		1	Motor	14	12	14	12	N
-	✓	PROCESS AREA	RASP-4	RAS PUMP 4	10	HP	480	3	FVNR		1	Motor	14	12	14	12	Y
-	✓	PROCESS AREA	RASP-5	RAS PUMP 5	10	HP	480	3	FVNR		1	Motor	14	12	14	12	Y
-	✓	PROCESS AREA	RASP-6	RAS PUMP 6	10	HP	480	3	FVNR		1	Motor	14	12	14	12	N
-	✓	PROCESS AREA	SCP-1	SCUM PUMP 1	3	HP	480	3	FVNR		1	Motor	5	4	5	4	Y
-	✓	PROCESS AREA	SCP-2	SCUM PUMP 2	3	HP	480	3	FVNR		1	Motor	5	4	5	4	N
-	✓	PROCESS AREA	SCP-3	SCUM PUMP 3	3	HP	480	3	FVNR		1	Motor	5	4	5	4	Y
-	✓	PROCESS AREA	SCP-4	SCUM PUMP 4	3	HP	480	3	FVNR		1	Motor	5	4	5	4	N
-	✓	PROCESS AREA	SP-1	SLUDGE PUMP 1	10	HP	480	3	FVNR		1	Motor	14	12	14	12	Y
-	✓	PROCESS AREA	SP-2	SLUDGE PUMP 2	10	HP	480	3	FVNR		1	Motor	14	12	14	12	Y
-	✓	PROCESS AREA	SP-3	SLUDGE PUMP 3	10	HP	480	3	FVNR	STANDBY (REDUNDANT)	0	Motor	14	12	0	0	N
-	✓	SURROUNDING AREA	FLTRP-1	FILTER PUMP 1	15	HP	480	3	FVNR		1	Motor	21	17	21	17	Y
-	✓	SURROUNDING AREA	FLTRP-2	FILTER PUMP 2	15	HP	480	3	FVNR		1	Motor	21	17	21	17	Y
-	✓	SURROUNDING AREA	BB_CL2_BLDG	SODIUM BISULFITE & CHLORINE BUILDING POWER	60	FLA	480	3	FEEDER		1	Other	60	50	60	50	Y
✓	-												Existing Total:	133	111	133	111	111
-	✓												Proposed Total:	1482	1138	1233	997	948
-	-												Overall Total:	1535	1249	1366	1108	1051

OVERALL PLANT

LOAD ANALYSIS

NONE

GENERAL NOTES:

A. EQUIPMENT SHOWN IN BOLD IS PROPOSED.

B. EXISTING GENERATOR HAS ADEQUATE CAPACITY TO SUPPORT PROPOSED IMPROVEMENTS.

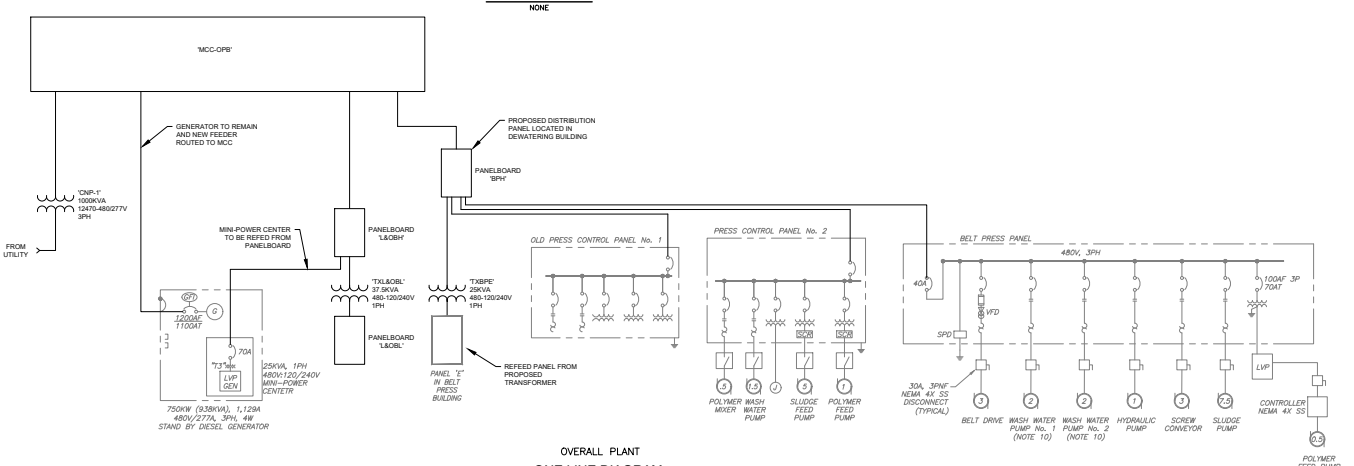

OVERALL PLANT

ONE LINE DIAGRAM

NONE

KGL
Kallurt Group, Inc.
TBPE Registration No. F-3966
TBPLS Registration No. 10194382

Kimley»Horn
© 2021 KIMLEY-HORN AND ASSOCIATES, INC.
801 W. Bay Dr., Suite 1300, Lutz, FL 33549, PH: (813) 620-1460
TBPE Reg. No. 696 TBPLS Reg. No. 10194382

No.	Revision	By	Date

THIS DOCUMENT IS INCOMPLETE AND SHALL NOT BE RELIED UPON FOR INTERIM REVIEW, BID, CONSTRUCTION, BIDDING, OR PERMIT PURPOSES.
SERIAL NO.:
DATE:

WEST UNIVERSITY
WWTP IMPROVEMENTS

EXHIBIT E-2
ONE LINE DIAGRAM
PROPOSED

DATE:	JULY 2021
DESIGN:	WAH
DRAWN:	MRH
CHECKED:	WAH
KHA NO.:	067514102

SHEET

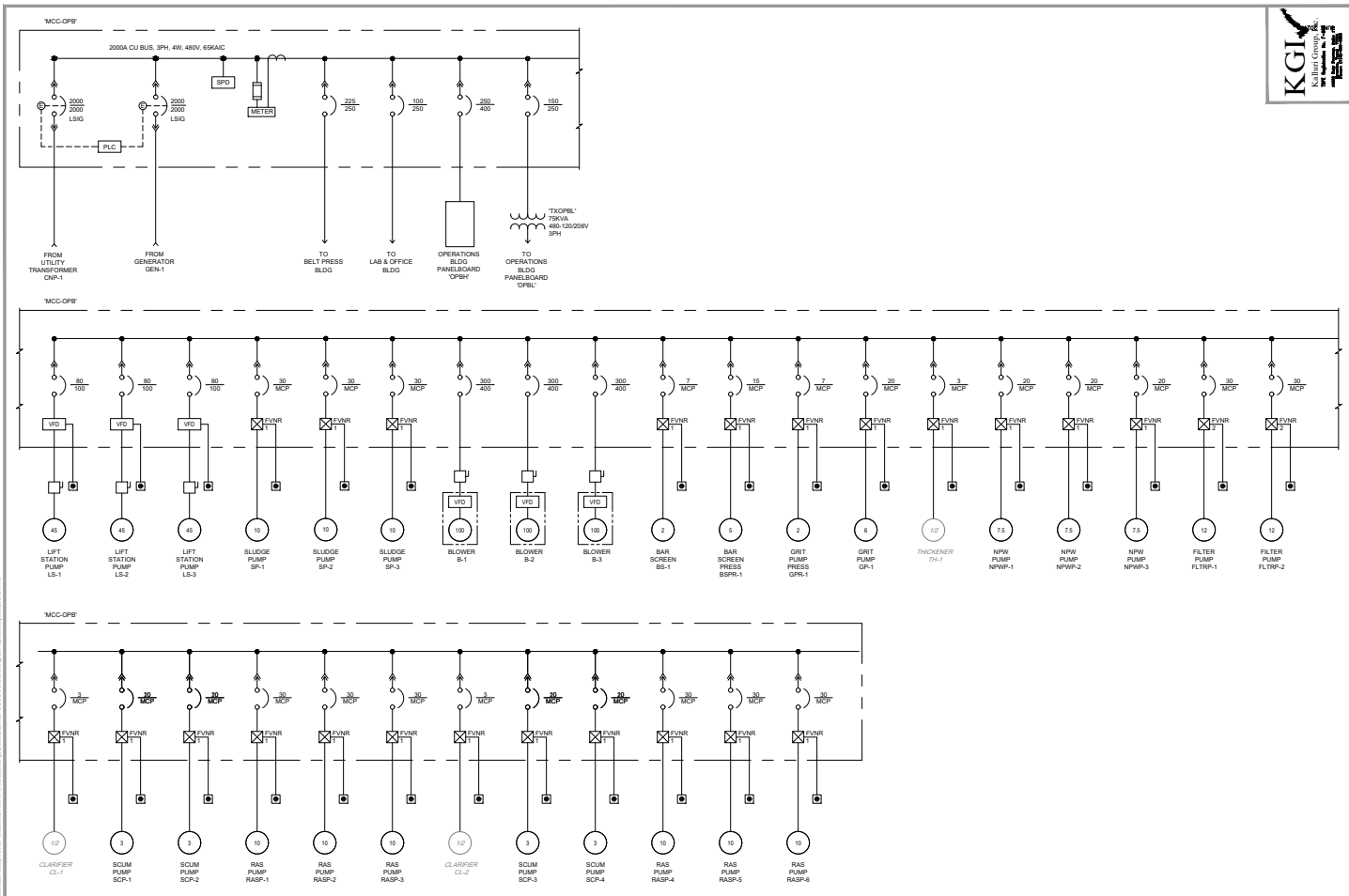

OPERATIONS BUILDING MCC

ONE LINE DIAGRAM

NONE

KGL Kalluri Group, Inc.

Kimley»Horn

No.	Revision	By	Date

THIS DOCUMENT IS INCOMPLETE AND IS RELEASED FOR THE PURPOSE OF INTERIM REVIEW ONLY. IT IS NOT TO BE USED FOR BIDDING, PERMIT, OR CONSTRUCTION PURPOSES.

SERIAL NO.

DATE:

WEST UNIVERSITY
WWTP IMPROVEMENTS

EXHIBIT E-3
OPERATIONS BUILDING
'MCC-OPB'

DATE:	JULY 2021
DESIGN:	WAH
DRAWN:	MRH
CHECKED:	WAH
KHA NO.:	067814162

SHEET

Appendix J: Hydraulic Profile

PEAK FLOW = 6 MGD

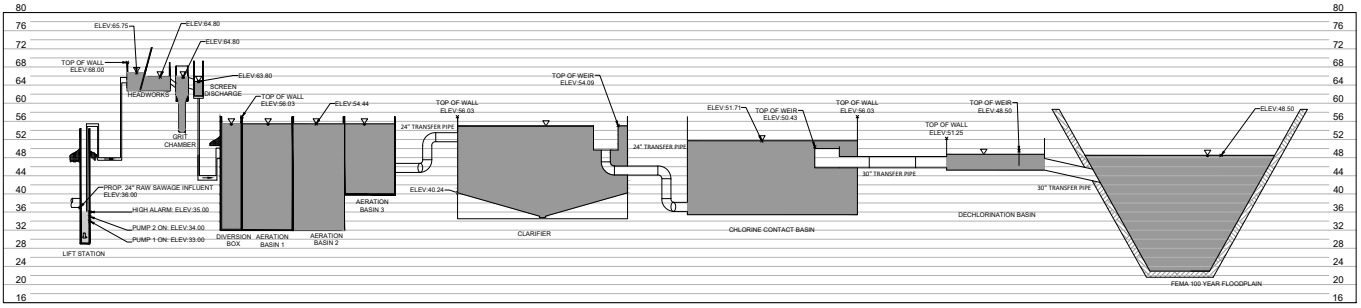

Scale 1" = 100'

811
Know what's **below.**
Call before you dig.

No.	REVISIONS	DATE	BY

Kimley»Horn
© 2021 KIMLEY-HORN AND ASSOCIATES, INC.
11700 KATY FREEWAY, SUITE 300, HOUSTON, TX 77079
PHONE: 281-397-4000
WWW.KIMLEY-HORN.COM
TBPE FIRM REGISTRATION F-928

KHA PROJECT 067783125
DATE JANUARY 2021
SCALE AS SHOWN
DESIGNED BY MPM
DRAWN BY HLR
CHECKED BY MAS

HYDRAULIC PROFILE

WWTP IMPROVEMENTS
PREPARED FOR
CITY OF WEST UNIVERSITY PLACE
HOUSTON TEXAS

SHEET NUMBER

Plotted By: Shelton, Mike Sheet: Sht-Info - Hydraulic Profile (Current) October 04, 2021 11:42:31am K:\HOU_Utilities\067783125 - West U WWTP Improvements\06_CAD\06_Exhibits\Hydraulic Profile.dwg
This document, together with the concepts and designs presented herein, as an instrument of service, is intended only for the specific purpose and client for which it was prepared. Reuse of and improper reliance on this document without written authorization and adaptation by Kimley-Horn and Associates, Inc. shall be without liability to Kimley-Horn and Associates, Inc.

Appendix K: Opinions of Probable Construction Cost

P001

Kimley-Horn & Associates, Inc.			Opinion of Probable Construction Cost
Client:	**City of West University Place**	**Date:**	**10/17/2021**
Project:	**Wastewater Treatment Plant PER**	**Prepared By:**	**MAS**
KHA No.:	**067812102**	**Checked By:**	**KPK**
Title:	**Electrical Power Service Improvements**		

Item No.	Item Description	Quantity	Unit	Unit Price	Item Cost
1	Pad Mounted CNP Transformer Assembly	1	LS	$128,800	$128,800
2	Genset Duct Bank, Conduit, and Conductors	1	LS	$189,000	$189,000
3	Temporary Service for Switchover	1	LS	$23,000	$23,000
4	Demolition and Recycling of Old Service	1	LS	$26,000	$26,000
5	Structural Supports / Flood Resiliency	1	LS	$89,000	$89,000

Basis for Cost Projection:

- ☐ No Design Completed
- ☑ Preliminary Design
- ☐ Final Design

Subtotal:		$455,800
Eng. (%,+/-)	15	$68,657
Conting. (%,+/-)	20	$91,543
Total:		**$616,000**

Total Cost for $641,000

Total Cost for $666,640

Assume annual escalation of 4% for each additional year for construction cost.

The Engineer has no control over the cost of labor, materials, equipment, or over the Contractor's methods of determining prices or over competitive bidding or market conditions. Opinions of probable costs provided herein are based on the information known to Engineer at this time and represent only the Engineer's judgment as a design professional familiar with the construction industry. The Engineer cannot and does not guarantee that proposals, bids, or actual construction costs will not vary from its opinions of probable costs.

Project Description:
High priority electrical projects related to power service.

Justification:
Protect the existing plant from single point failures and increase power reliability.

Prerequisites:
None

Project Key Map

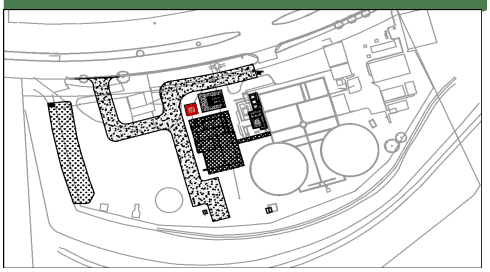



Existing Transformer



Pad Mounted Transformer



Existing Generator and Elec Gear

P002

Kimley-Horn & Associates, Inc. — **Opinion of Probable Construction Cost**

Client:	**City of West University Place**	**Date:**	**10/17/2021**
Project:	**Wastewater Treatment Plant PER**	**Prepared By:**	**MAS**
KHA No.:	**067812102**	**Checked By:**	**KPK**
Title:	**Treatment Process Optimization with Fine Diffusers and Pumps**		

Item No.	Item Description	Quantity	Unit	Unit Price	Item Cost
1	Fine Bubble Diffusers	1	LS	$185,000	$185,000
2	Blowers, Rotary Screw with integral VFD	3	EA	$145,000	$435,000
3	Structural Modifications	1	LS	$35,000	$35,000
4	Submersible RAS Pumps	4	EA	$50,000	$200,000
5	Submersible WAS Pumps	4	EA	$15,000	$60,000
6	Submersible Scum Pumps	4	EA	$5,000	$20,000
7	Piping	1	LS	$270,000	$270,000
8	Sluice Gates	11	EA	$17,000	$187,000
9	Grit Removal from Basins	624	TON	$500	$312,000
10	Demolition of Blowers & Paving	1	LS	$20,000	$20,000
11	Electrical Power and Controls	1	LS	$175,000	$175,000
12	Flood Resiliency Structures	1	LS	$320,000	$320,000

Basis for Cost Projection:

- ☐ No Design Completed
- ☑ Preliminary Design
- ☐ Final Design

Subtotal:		$2,219,000
Eng. (%,+/-)	15	$333,000
Conting. (%,+/-)	20	$444,000
Total:		**$2,996,000**

Total Cost for $3,116,000

Total Cost for $3,240,640

Assume annual escalation of 4% for each additional year for construction cost.

The Engineer has no control over the cost of labor, materials, equipment, or over the Contractor's methods of determining prices or over competitive bidding or market conditions. Opinions of probable costs provided herein are based on the information known to Engineer at this time and represent only the Engineer's judgment as a design professional familiar with the construction industry. The Engineer cannot and does not guarantee that proposals, bids, or actual construction costs will not vary from its opinions of probable costs.

Project Description:

Optimize the existing contact stabilization treatment process by converting it to a conventional activated sludge configuration. This includes installing new blowers, fine bubble diffuser, sluice gates, and submersible pumps to replace process air lifts.

Justification:

Changing treatment process will provide more reliable nutrient removal and cut down in energy costs. Submersible pumps will provide more operation flexibility

Prerequisites: None

Project Key Map

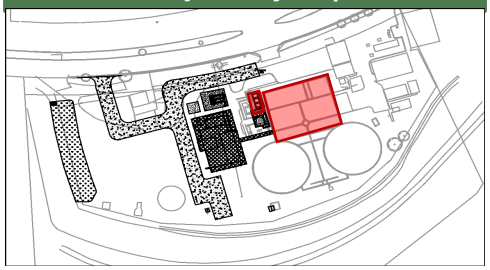

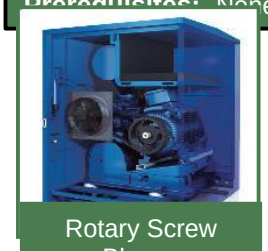

Rotary Screw Blower



Fine Bubble Diffuser



Existing Blowers

P003

Kimley-Horn & Associates, Inc.			Opinion of Probable Construction Cost
Client:	**City of West University Place**	**Date:**	**10/17/2021**
Project:	**Wastewater Treatment Plant PER**	**Prepared By:**	**MAS**
KHA No.:	**067812102**	**Checked By:**	**KPK**
Title:	**Motor Control Center and Controls**		

Item No.	Item Description	Quantity	Unit	Unit Price	Item Cost
1	WWTP Motor Control Center (MCC)	1	LS	$388,000	$388,000
2	Supervisory Control and Data Acquisition (SCADA)	1	LS	$110,100	$110,100
3	Duct banks, Conduit, and Conductors	1	LS	$176,000	$176,000
4	EI&C Distribution System	1	LS	$155,100	$155,100
5	Demolition and Recycling of Old Equipment	1	LS	$26,000	$26,000

Basis for Cost Projection:

- ☐ No Design Completed
- ☑ Preliminary Design
- ☐ Final Design

Subtotal:		$855,200
Eng. (%,+/-)	15	$128,486
Conting. (%,+/-)	20	$171,314
Total:		**$1,155,000**

Total Cost for $1,202,000

Total Cost for $1,250,080

Assume annual escalation of 4% for each additional year for construction cost.

The Engineer has no control over the cost of labor, materials, equipment, or over the Contractor's methods of determining prices or over competitive bidding or market conditions. Opinions of probable costs provided herein are based on the information known to Engineer at this time and represent only the Engineer's judgment as a design professional familiar with the construction industry. The Engineer cannot and does not guarantee that proposals, bids, or actual construction costs will not vary from its opinions of probable costs.

Project Description:

Electrical improvements related to improving the motor control center, improving the SCADA system, and the overall power distribution and control system.
Maintenance of electrical items to protect plant equipment.

Prerequisites:

None

Project Key Map

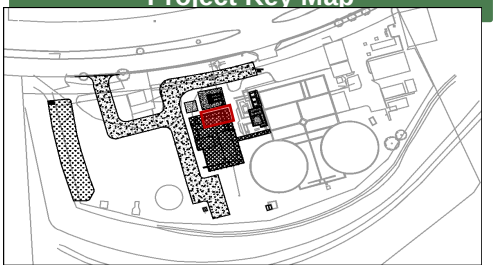



Existing Outlet Body



Existing Conduit



Existing MCC

Kimley-Horn & Associates, Inc. — **Opinion of Probable Construction Cost**

Client:	**City of West University Place**	**Date:**	**10/17/2021**
Project:	**Wastewater Treatment Plant PER**	**Prepared By:**	**MAS**
KHA No.:	**067812102**	**Checked By:**	**KPK**
Title:	**Disinfection Improvements**		

Item No.	Item Description	Quantity	Unit	Unit Price	Item Cost
1	Dechlorinator System Improvements	1	LS	$84,000	$84,000
2	Liquid Bleach Conversion	1	LS	$84,000	$84,000
3	Flood Resiliency Structures	1	LS	$90,000	$90,000
4	Electrical Power and Controls	1	LS	$30,000	$30,000

Basis for Cost Projection:

- ☐ No Design Completed
- ☑ Preliminary Design
- ☐ Final Design

Subtotal:		$288,000
Eng. (%,+/-)	15	$43,286
Conting. (%,+/-)	20	$57,714
Total:		**$389,000**

Total Cost for $405,000

Total Cost for $421,200

Assume annual escalation of 4% for each additional year for construction cost.

The Engineer has no control over the cost of labor, materials, equipment, or over the Contractor's methods of determining prices or over competitive bidding or market conditions. Opinions of probable costs provided herein are based on the information known to Engineer at this time and represent only the Engineer's judgment as a design professional familiar with the construction industry. The Engineer cannot and does not guarantee that proposals, bids, or actual construction costs will not vary from its opinions of probable costs.

Project Description:
Replace the existing dechlorination system and building, and convert the existing chlorine gas disinfection system to liquid bleach.

Justification:
Dechlorination system needs to be replaced to fix existing components and conversion to liquid chlorine system is a lower risk alternative to chlorine gas system.

Prerequisites:
None

Project Key Map

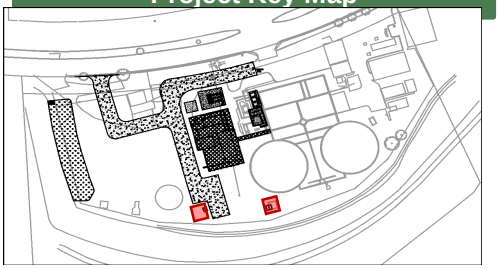



Existing Chlorine Tanks



Existing Dechlor Pump

P007

Kimley-Horn & Associates, Inc. — **Opinion of Probable Construction Cost**

Client:	**City of West University Place**	**Date:**	**10/17/2021**
Project:	**Wastewater Treatment Plant PER**	**Prepared By:**	**MAS**
KHA No.:	**067812102**	**Checked By:**	**KPK**
Title:	**Replace Screw Pumps with Submersible Pumps**		

Item No.	Item Description	Quantity	Unit	Unit Price	Item Cost
1	Removal of Existing Screw Pumps	1	LS	$60,000	$60,000
2	Submersible Pumps	2	EA	$130,000	$260,000
3	Lift Station Piping, Valves, and Connections	1	LS	$170,000	$170,000
4	21' Diameter Wet Well Structure	1	LS	$322,000	$322,000
5	18" Force Main	1	LS	$75,000	$75,000
6	36" Gravity Line	40	LF	$400	$16,000
7	Electrical Power and Controls	1	LS	$97,500	$97,500
8	Flood Resiliency Structures	1	LS	$90,000	$90,000

Basis for Cost Projection:

- ☐ No Design Completed
- ☑ Preliminary Design
- ☐ Final Design

Subtotal:		$1,090,500
Eng. (%,+/-)	15	$163,929
Conting. (%,+/-)	20	$218,571
Total:		**$1,473,000**

Total Cost for $1,532,000

Total Cost for $1,593,280

Assume annual escalation of 4% for each additional year for construction cost.

The Engineer has no control over the cost of labor, materials, equipment, or over the Contractor's methods of determining prices or over competitive bidding or market conditions. Opinions of probable costs provided herein are based on the information known to Engineer at this time and represent only the Engineer's judgment as a design professional familiar with the construction industry. The Engineer cannot and does not guarantee that proposals, bids, or actual construction costs will not vary from its opinions of probable costs.

Project Description:

Remove the existing screw pumps that lift influent into the WWTP. A wet well will be constructed and submersible pumps will be installed to replace the screw pumps.

Justification:

Submersible pumps are more energy efficient than the current screw pumps and are less susceptible to flooding cutting down on operational cost and increasing the WWTP's resiliency to flooding events

Prerequisites:

Site Work

Project Key Map

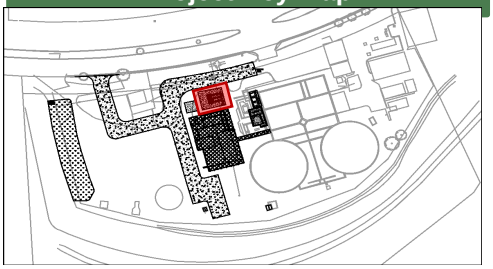



Existing Screw Pumps



Submersible Pump

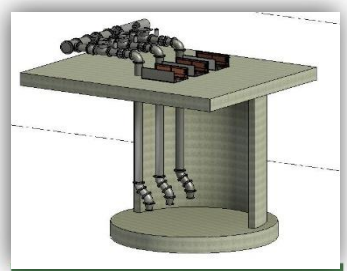

Propsed Lift Station

Kimley-Horn & Associates, Inc. — **Opinion of Probable Construction Cost**

Client:	**City of West University Place**	**Date:**	**10/17/2021**
Project:	**Wastewater Treatment Plant PER**	**Prepared By:**	**MAS**
KHA No.:	**067812102**	**Checked By:**	**KPK**
Title:	**Mechanical Step Screen**		

Item No.	Item Description	Quantity	Unit	Unit Price	Item Cost
1	Mechanical Step Screen	1	LS	$270,000	$270,000
2	Flood Resiliency Structures	1	LS	$110,000	$110,000
3	Sluice Gates	3	EA	$17,000	$51,000
4	Electrical Power and Controls	1	LS	$30,000	$30,000

Basis for Cost Projection:

- ☐ No Design Completed
- ☑ Preliminary Design
- ☐ Final Design

Subtotal:		$461,000
Eng. (%,+/-)	15	$69,429
Conting. (%,+/-)	20	$92,571
Total:		**$623,000**

Total Cost for $648,000

Total Cost for $673,920

Assume annual escalation of 4% for each additional year for construction cost.

The Engineer has no control over the cost of labor, materials, equipment, or over the Contractor's methods of determining prices or over competitive bidding or market conditions. Opinions of probable costs provided herein are based on the information known to Engineer at this time and represent only the Engineer's judgment as a design professional familiar with the construction industry. The Engineer cannot and does not guarantee that proposals, bids, or actual construction costs will not vary from its opinions of probable costs.

Project Description:

Install a mechanical step screen in the existing screw pump bay. This will include relocating the bar screen to act as an emergency bypass screen during maintenance of the proposed screen, and sluice gats to allow operation to direct flow as necessary.

Justification:

The mechanical step screen will remove a higher amount of solids that could have a negative impact to the biological processes in the plant. This would include floatables as well as heavier solids that would settle in the basins.

Prerequisites:

Screw Pump Replacement

Project Key Map

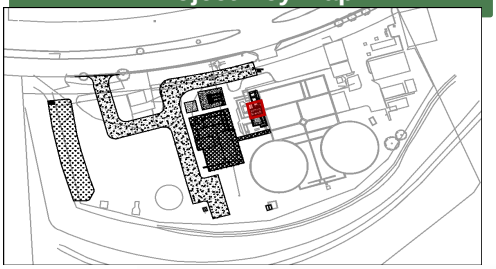



Existing Bar Screen



Barscreen

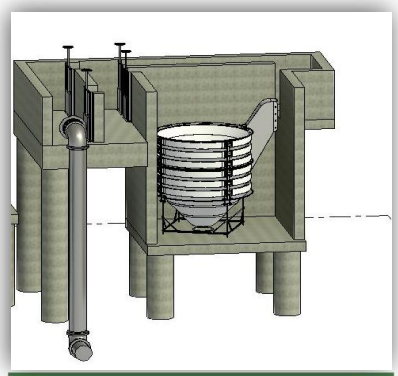

Proposed Headworks

Kimley-Horn & Associates, Inc. — **Opinion of Probable Construction Cost**

Client:	**City of West University Place**	**Date:**	**10/17/2021**
Project:	**Wastewater Treatment Plant PER**	**Prepared By:**	**MAS**
KHA No.:	**067812102**	**Checked By:**	**KPK**
Title:	**Grit Chamber**		

Item No.	Item Description	Quantity	Unit	Unit Price	Item Cost
1	Grit Concentrator	1	LS	$243,000	$243,000
2	Grit Classification Unit	1	LS	$179,000	$179,000
3	Flood Resiliency Structures	1	LS	$185,000	$185,000
4	Electrical Power and Controls	1	LS	$45,000	$45,000

Basis for Cost Projection:

- ☐ No Design Completed
- ☑ Preliminary Design
- ☐ Final Design

Subtotal:		$652,000
Eng. (%,+/-)	15	$98,143
Conting. (%,+/-)	20	$130,857
Total:		**$881,000**

Total Cost for $917,000

Total Cost for $953,680

Assume annual escalation of 4% for each additional year for construction cost.

The Engineer has no control over the cost of labor, materials, equipment, or over the Contractor's methods of determining prices or over competitive bidding or market conditions. Opinions of probable costs provided herein are based on the information known to Engineer at this time and represent only the Engineer's judgment as a design professional familiar with the construction industry. The Engineer cannot and does not guarantee that proposals, bids, or actual construction costs will not vary from its opinions of probable costs.

Project Description:
Install a grit removal chamber at the existing influent channel where the existing screw pumps discharge.

Justification:
Removes inert solid material that interferes with the biological process of the plant and settles out in the basins that needs to be vacuumed out.

Prerequisites:
Remove Screw Pumps

Project Key Map

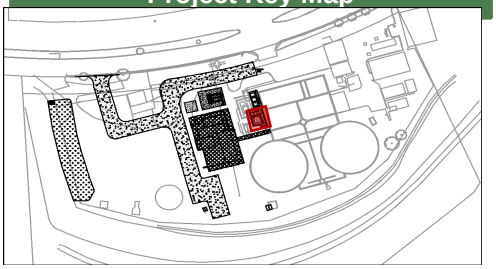

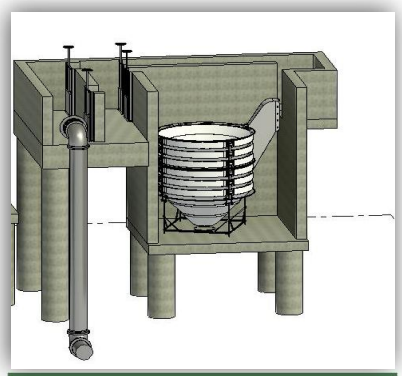

Proposed Headworks



Grit Classification Unit



Grit Washer

P010

Kimley-Horn & Associates, Inc.		Opinion of Probable Construction Cost	
Client:	**City of West University Place**	**Date:**	**10/17/2021**
Project:	**Wastewater Treatment Plant PER**	**Prepared By:**	**MAS**
KHA No.:	**067812102**	**Checked By:**	**KPK**
Title:	**Consolidated Operations and Maintenance Manual**		

Item No.	Item Description	Quantity	Unit	Unit Price	Item Cost
1	O&M Manual	1	LS	$40,000	$40,000

Basis for Cost Projection:

- ☐ No Design Completed
- ☑ Preliminary Design
- ☐ Final Design

Subtotal:		$40,000
Eng. (%,+/-)	15	$6,000
Conting. (%,+/-)	20	$8,000
Total:		**$54,000**

Total Cost for $57,000

Total Cost for $59,280

Assume annual escalation of 4% for each additional year for construction cost.

The Engineer has no control over the cost of labor, materials, equipment, or over the Contractor's methods of determining prices or over competitive bidding or market conditions. Opinions of probable costs provided herein are based on the information known to Engineer at this time and represent only the Engineer's judgment as a design professional familiar with the construction industry. The Engineer cannot and does not guarantee that proposals, bids, or actual construction costs will not vary from its opinions of probable costs.

Project Description:
Write an operation and maintenance manual to provide guidelines for plant maintenance schedule and operational guidelines.

Justification:
Helps ensure longevity of equipment and creates action plan during disruptive plant events.

Prerequisites:
None

Project Key Map

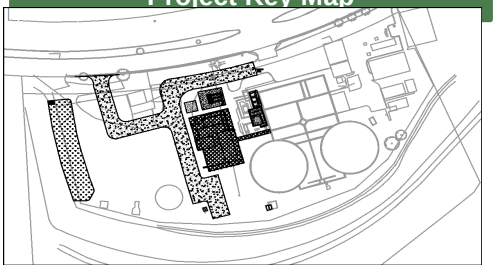



Example O&M Manuals

Kimley-Horn & Associates, Inc. — **Opinion of Probable Construction Cost**

Client:	**City of West University Place**	**Date:**	**10/17/2021**
Project:	**Wastewater Treatment Plant PER**	**Prepared By:**	**MAS**
KHA No.:	**067812102**	**Checked By:**	**KPK**
Title:	**Control Building**		

Item No.	Item Description	Quantity	Unit	Unit Price	Item Cost
1	Control Building (West Option)	1	LS	$1,092,300	$1,092,300
2	Flood Resiliency Structures	1	LS	$862,500	$862,500
3	Electrical Power and Controls	1	LS	$70,000	$70,000

Basis for Cost Projection:

- ☐ No Design Completed
- ☑ Preliminary Design
- ☐ Final Design

Subtotal:		$2,024,800
Eng. (%,+/-)	15	$303,943
Conting. (%,+/-)	20	$405,257
Total:		**$2,734,000**

Total Cost for 2C $2,844,000

Total Cost for 2C $2,957,760

Assume annual escalation of 4% for each additional year for construction cost.

The Engineer has no control over the cost of labor, materials, equipment, or over the Contractor's methods of determining prices or over competitive bidding or market conditions. Opinions of probable costs provided herein are based on the information known to Engineer at this time and represent only the Engineer's judgment as a design professional familiar with the construction industry. The Engineer cannot and does not guarantee that proposals, bids, or actual construction costs will not vary from its opinions of probable costs.

Project Description:
Install and administration and lab building on the west side of the site.
Justification:
The existing admin building flooded during Hurricane Harvey. The new building would provide continuity of operation for the laboratory and facility critical infrastructure.
Prerequisites:
None

Project Key Map

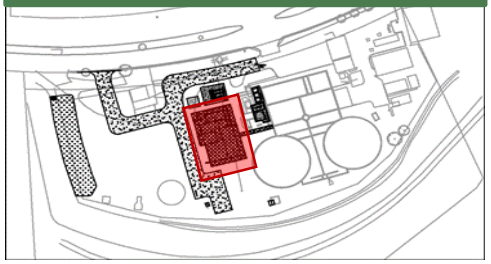



Existing Control Building

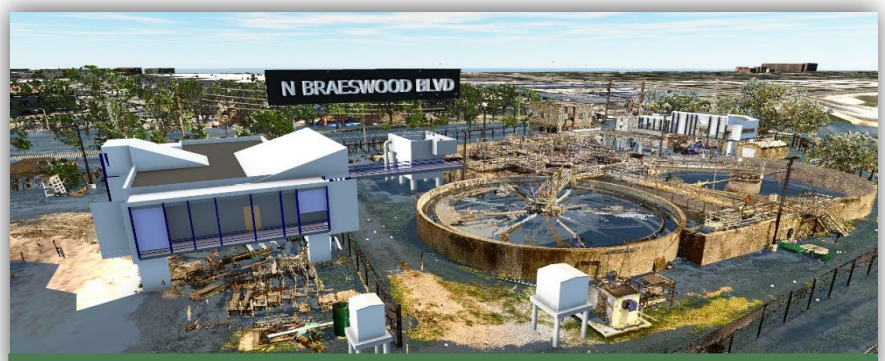

Proposed Control Building

Kimley-Horn & Associates, Inc. — **Opinion of Probable Construction Cost**

Client:	**City of West University Place**	**Date:**	**10/17/2021**
Project:	**Wastewater Treatment Plant PER**	**Prepared By:**	**MAS**
KHA No.:	**067812102**	**Checked By:**	**KPK**
Title:	**Site Work**		

Item No.	Item Description	Quantity	Unit	Unit Price	Item Cost
1	Concrete Paving	1400	SY	$65	$91,000
2	Grading	1	LS	$30,000	$30,000
3	Fence Demolition	200	LF	$10	$2,000
4	Drainage Improvements	1	LS	$40,000	$40,000
5	Automatic Gate Opener	2	EA	$10,000	$20,000
6	Existing Structure Demolition	1	LS	$70,000	$70,000
7	Chain Link Fencing	650	LF	$25	$16,250

Basis for Cost Projection:

- ☐ No Design Completed
- ☑ Preliminary Design
- ☐ Final Design

Subtotal:		$269,250
Eng. (%,+/-)	15	$40,607
Conting. (%,+/-)	20	$54,143
Total:		**$364,000**

Total Cost for 2C $379,000

Total Cost for 2C $394,160

Assume annual escalation of 4% for each additional year for construction cost.

The Engineer has no control over the cost of labor, materials, equipment, or over the Contractor's methods of determining prices or over competitive bidding or market conditions. Opinions of probable costs provided herein are based on the information known to Engineer at this time and represent only the Engineer's judgment as a design professional familiar with the construction industry. The Engineer cannot and does not guarantee that proposals, bids, or actual construction costs will not vary from its opinions of probable costs.

Project Description:
Site improvements, such as improved site access and providing a safe area to pull off of North Braeswood Blvd.

Justification:
Allows for a safe distance to pull off of North Braeswood and secures the west side of the site to allow for future improvements and site access.

Prerequisites:
None

Project Key Map

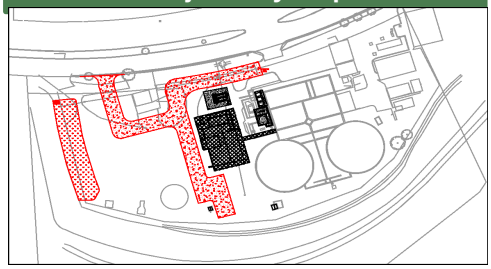



Chain-link Fence



Entrance



Site Pavement

P013

Kimley-Horn & Associates, Inc. — **Opinion of Probable Construction Cost**

Client:	**City of West University Place**	**Date:**	**10/17/2021**
Project:	**Wastewater Treatment Plant PER**	**Prepared By:**	**MAS**
KHA No.:	**067812102**	**Checked By:**	**KPK**
Title:	**WWTP Structural Improvements**		

Item No.	Item Description	Quantity	Unit	Unit Price	Item Cost
1	Treatment Basin Rehabilitation	1	LS	$72,741	$72,741
2	Dewatering Facility Rehabilitation	1	LS	$23,425	$23,425

Basis for Cost Projection:

- ☐ No Design Completed
- ☑ Preliminary Design
- ☐ Final Design

Subtotal:		$96,166
Eng. (%,+/-)	15	$14,500
Conting. (%,+/-)	20	$19,334
Total:		**$130,000**

Total Cost for $136,000

Total Cost for $141,440

Assume annual escalation of 4% for each additional year for construction cost.

The Engineer has no control over the cost of labor, materials, equipment, or over the Contractor's methods of determining prices or over competitive bidding or market conditions. Opinions of probable costs provided herein are based on the information known to Engineer at this time and represent only the Engineer's judgment as a design professional familiar with the construction industry. The Engineer cannot and does not guarantee that proposals, bids, or actual construction costs will not vary from its opinions of probable costs.

Project Description:
Based on the preliminary structural evaluation of the WWTP, including buildings and treatment units, this project includes structural repairs on WWTP structures.

Justification:
There are signs of wear on several areas of the plant. A structural analysis was performed to check for safety or structural concerns that need to be addressed.

Prerequisites:
None

Project Key Map

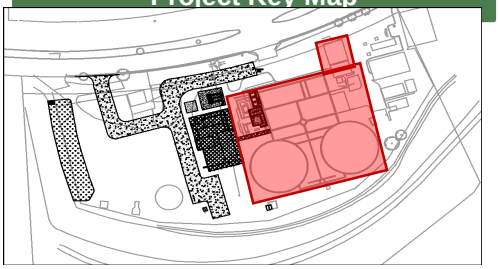



Existing Structural Damage



Existing Structural Damage

Kimley-Horn & Associates, Inc. — **Opinion of Probable Construction Cost**

Client:	**City of West University Place**	**Date:**	**10/17/2021**
Project:	**Wastewater Treatment Plant PER**	**Prepared By:**	**MAS**
KHA No.:	**067812102**	**Checked By:**	**KPK**
Title:	**Convert Thickener to Digester**		

Item No.	Item Description	Quantity	Unit	Unit Price	Item Cost
1	Removal of Existing Internal Components	1	LS	$60,000	$60,000
2	Air Drops	1	LS	$60,000	$60,000
3	Internal Piping	1	LS	$120,000	$120,000

Basis for Cost Projection:

- ☐ No Design Completed
- ☑ Preliminary Design
- ☐ Final Design

Subtotal:		$240,000
Eng. (%,+/-)	15	$36,000
Conting. (%,+/-)	20	$48,000
Total:		**$324,000**

Total Cost for $337,000

Total Cost for $350,480

Assume annual escalation of 4% for each additional year for construction cost.

The Engineer has no control over the cost of labor, materials, equipment, or over the Contractor's methods of determining prices or over competitive bidding or market conditions. Opinions of probable costs provided herein are based on the information known to Engineer at this time and represent only the Engineer's judgment as a design professional familiar with the construction industry. The Engineer cannot and does not guarantee that proposals, bids, or actual construction costs will not vary from its opinions of probable costs.

Project Description:

Remove the internal components of the existing gravity sludge thickener and convert to a pre-digester basin. Scope includes installing air line piping from the blower header to the proposed digester location, installing fine bubble diffusers, decant line and sludge transfer lines to serve the digester.

Justification:

Sludge coming from existing gravity thickener is a lower concentration than anticipated. Modifications will allow for greater operator flexibility.

Prerequisites:

None

Project Key Map

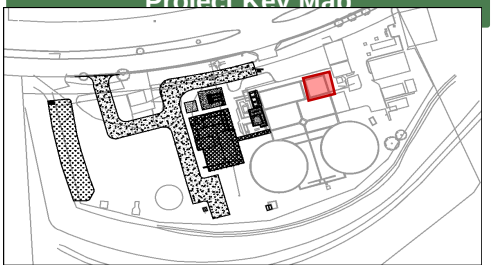



Fine Bubble Diffuser



Existing Gravity Thickener

Kimley-Horn & Associates, Inc. — **Opinion of Probable Construction Cost**

Client:	**City of West University Place**	**Date:**	**10/17/2021**
Project:	**Wastewater Treatment Plant PER**	**Prepared By:**	**MAS**
KHA No.:	**067812102**	**Checked By:**	**KPK**
Title:	**Plant Security Cameras**		

Item No.	Item Description	Quantity	Unit	Unit Price	Item Cost
1	Plant Secrurity Cameras	3	EA	$9,000	$27,000

Basis for Cost Projection:

- ☐ No Design Completed
- ☑ Preliminary Design
- ☐ Final Design

Subtotal:		$27,000
Eng. (%,+/-)	15	$4,286
Conting. (%,+/-)	20	$5,714
Total:		**$37,000**

Total Cost for $39,000

Total Cost for $40,560

Assume annual escalation of 4% for each additional year for construction cost.

The Engineer has no control over the cost of labor, materials, equipment, or over the Contractor's methods of determining prices or over competitive bidding or market conditions. Opinions of probable costs provided herein are based on the information known to Engineer at this time and represent only the Engineer's judgment as a design professional familiar with the construction industry. The Engineer cannot and does not guarantee that proposals, bids, or actual construction costs will not vary from its opinions of probable costs.

Project Description:
Install additional security cameras for plant security

Justification:
Helps ensure public safety and deters unauthorized people from entering the plant.

Prerequisites:
None

Project Key Map

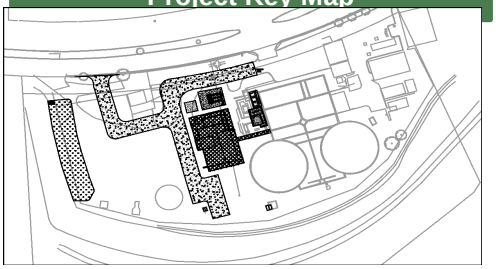



Existing Security Camera

Kimley-Horn & Associates, Inc. — **Opinion of Probable Construction Cost**

Client:	**City of West University Place**	**Date:**	**10/17/2021**
Project:	**Wastewater Treatment Plant PER**	**Prepared By:**	**MAS**
KHA No.:	**067812102**	**Checked By:**	**KPK**
Title:	**Nonpotable Water System**		

Item No.	Item Description	Quantity	Unit	Unit Price	Item Cost
1	NPW Pumps Package	1	LS	$55,000	$55,000
2	Basket Strainers	1	LS	$40,000	$40,000
3	Piping	1	LS	$23,000	$23,000
4	Electrical Power and Controls	1	LS	$29,000	$29,000
5	Demolition of Existing Components	1	LS	$20,000	$20,000

Basis for Cost Projection:

- ☐ No Design Completed
- ☑ Preliminary Design
- ☐ Final Design

Subtotal:		$167,000
Eng. (%,+/-)	15	$25,286
Conting. (%,+/-)	20	$33,714
Total:		**$226,000**

Total Cost for $236,000

Total Cost for $245,440

Assume annual escalation of 4% for each additional year for construction cost.

The Engineer has no control over the cost of labor, materials, equipment, or over the Contractor's methods of determining prices or over competitive bidding or market conditions. Opinions of probable costs provided herein are based on the information known to Engineer at this time and represent only the Engineer's judgment as a design professional familiar with the construction industry. The Engineer cannot and does not guarantee that proposals, bids, or actual construction costs will not vary from its opinions of probable costs.

Project Description:
Replace the existing NPW System with new pumps and intake screen.

Justification:
Existing NPW system utilizes multiple pumps to supply water to components vital to plant operation. New system will simplify system and eliminate potential point of failure.

Prerequisites:
None

Project Key Map

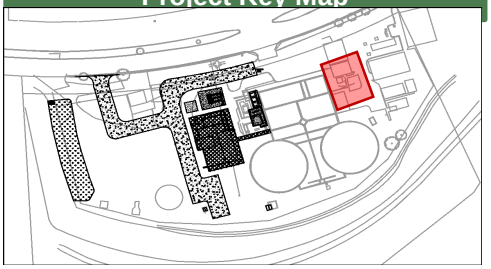



Existing NPW Pumps



Proposed Filter



Proposed Pumps

Appendix L: Sequencing Plan

West Sequencing Plan

West

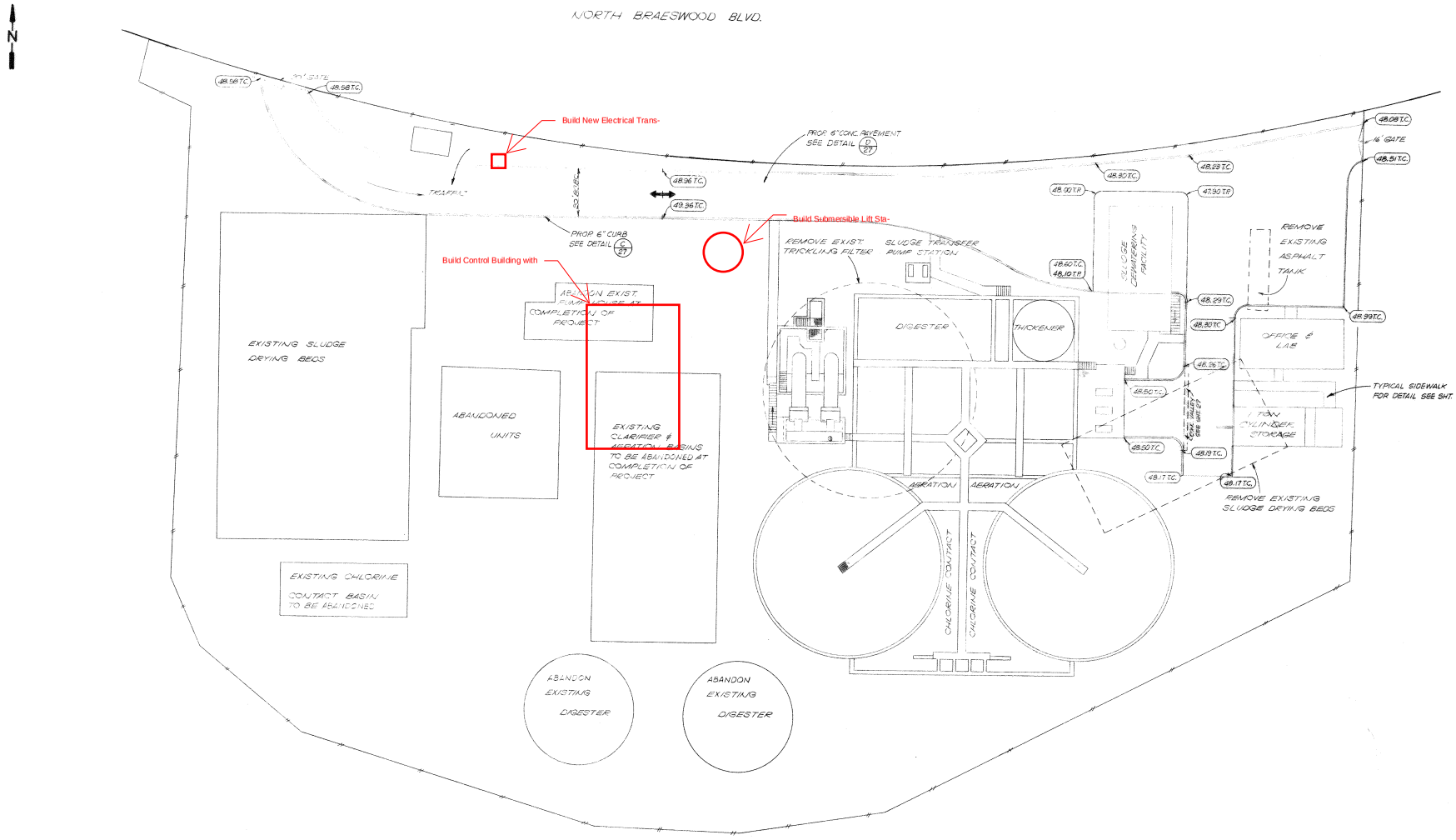

West Option Step 1

No.	Revision	Date	No.	Revision	Date

BEI

BAYSHORE ENGINEERS, INC.
CONSULTING ENGINEERS
P.O. BOX 627
DEER PARK, TEXAS 77536

Scale: 1" = 20'
Dwn. By: M.G. Date: 9/80
Chkd. By: MEC Date: 10/80

WEST UNIVERSITY PLACE
SEWAGE TREATMENT PLANT
PLOT PLAN

Project No: 31-01-78
Drawing No:
Sheet 2 of 40

West Sequencing Plan

West

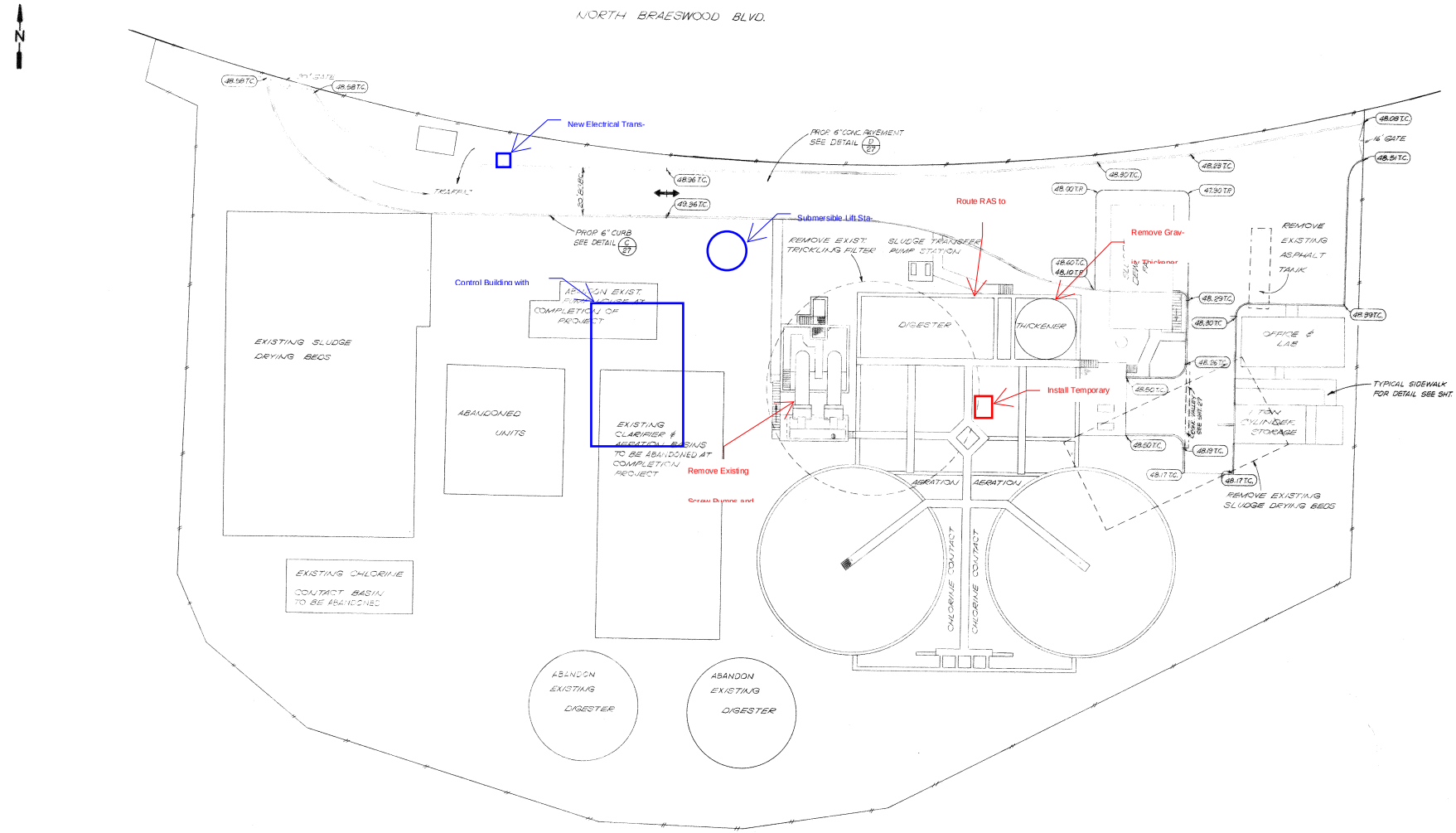

West Option Step 2

No.	Revision	Date	No.	Revision	Date

BEI

BAYSHORE ENGINEERS, INC.
CONSULTING ENGINEERS
P.O. BOX 627
DEER PARK, TEXAS 77536

Scale: 1" = 20'
Dwn. By: M.G. Date: 9/80
Chkd. By: MEC Date: 10/80

WEST UNIVERSITY PLACE
SEWAGE TREATMENT PLANT
PLOT PLAN

Project No: 31-01-78
Drawing No:
Sheet 2 of 40

West Sequencing Plan

West

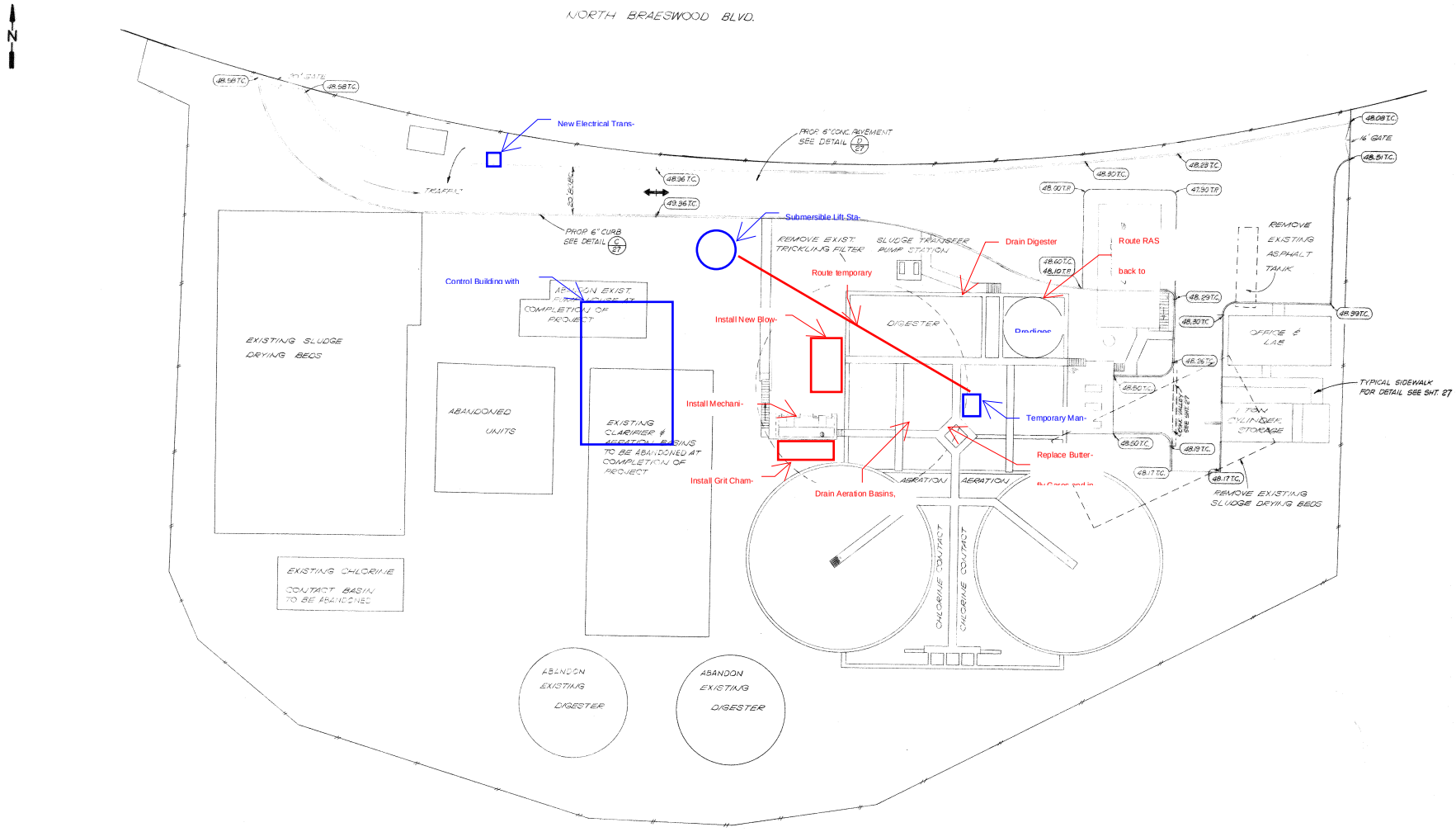

West Option Step 3

No.	Revision	Date	No.	Revision	Date

BEI

BAYSHORE ENGINEERS, INC.
CONSULTING ENGINEERS
P. O. BOX 627
DEER PARK, TEXAS 77536

Scale: 1" = 20'
Dwn. By: M.G. Date: 9/80
Chkd. By: MEC Date:

WEST UNIVERSITY PLACE
SEWAGE TREATMENT PLANT
PLOT PLAN

Project No: 31-01-78
Drawing No:
Sheet 2 of 40

West

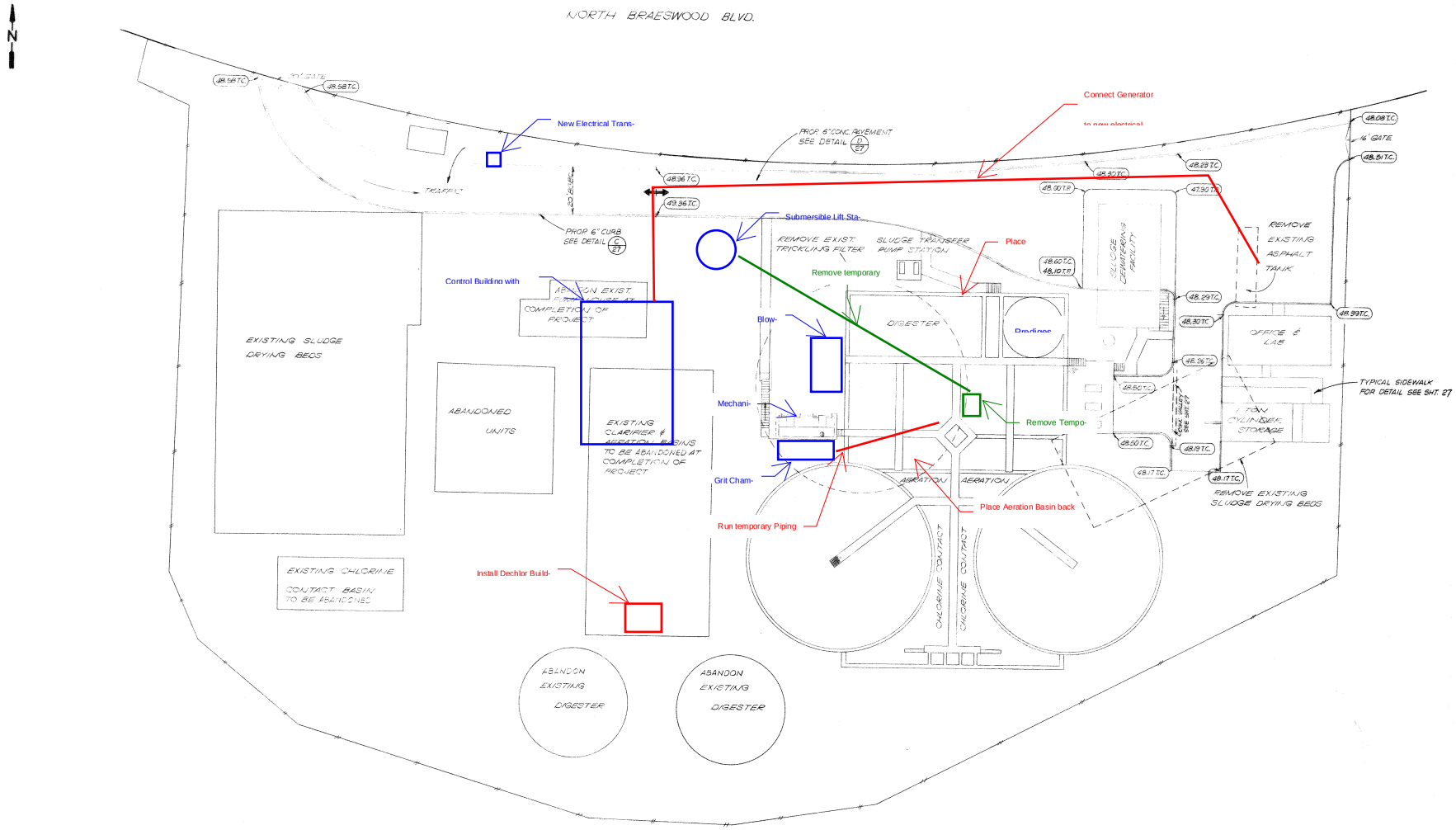

West Option Step 4

No.	Revision	Date	No.	Revision	Date

BEI

BAYSHORE ENGINEERS, INC.
CONSULTING ENGINEERS
P. O. BOX 627
DEER PARK, TEXAS 77536

Scale: 1" = 20'
Dwn. By: M.G. Date: 9/80
Chkd. By: MEC Date:

WEST UNIVERSITY PLACE
SEWAGE TREATMENT PLANT
PLOT PLAN

Project No: 31-01-78
Drawing No:
Sheet 2 of 40

West Sequencing Plan

West

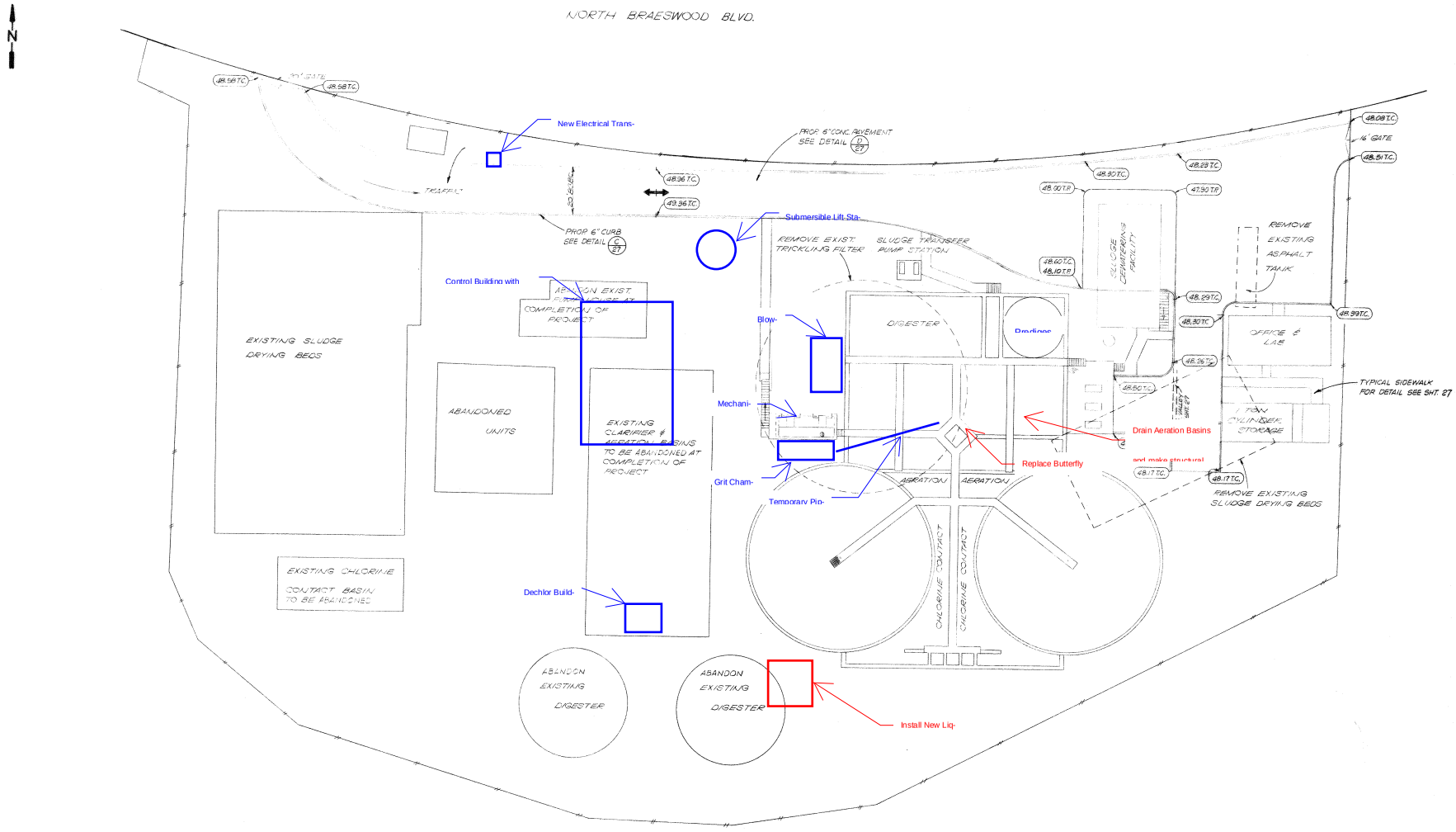

West Option Step 5

No.	Revision	Date	No.	Revision	Date

BEI

BAYSHORE ENGINEERS, INC.
CONSULTING ENGINEERS
P. O. BOX 627
DEER PARK, TEXAS 77536

Scale: 1" = 20'
Dwn. By: M.G. Date: 9/80
Chkd. By: MEC Date:

WEST UNIVERSITY PLACE
SEWAGE TREATMENT PLANT
PLOT PLAN

Project No: 31-01-78
Drawing No:
Sheet 2 of 40

West Sequencing Plan

West

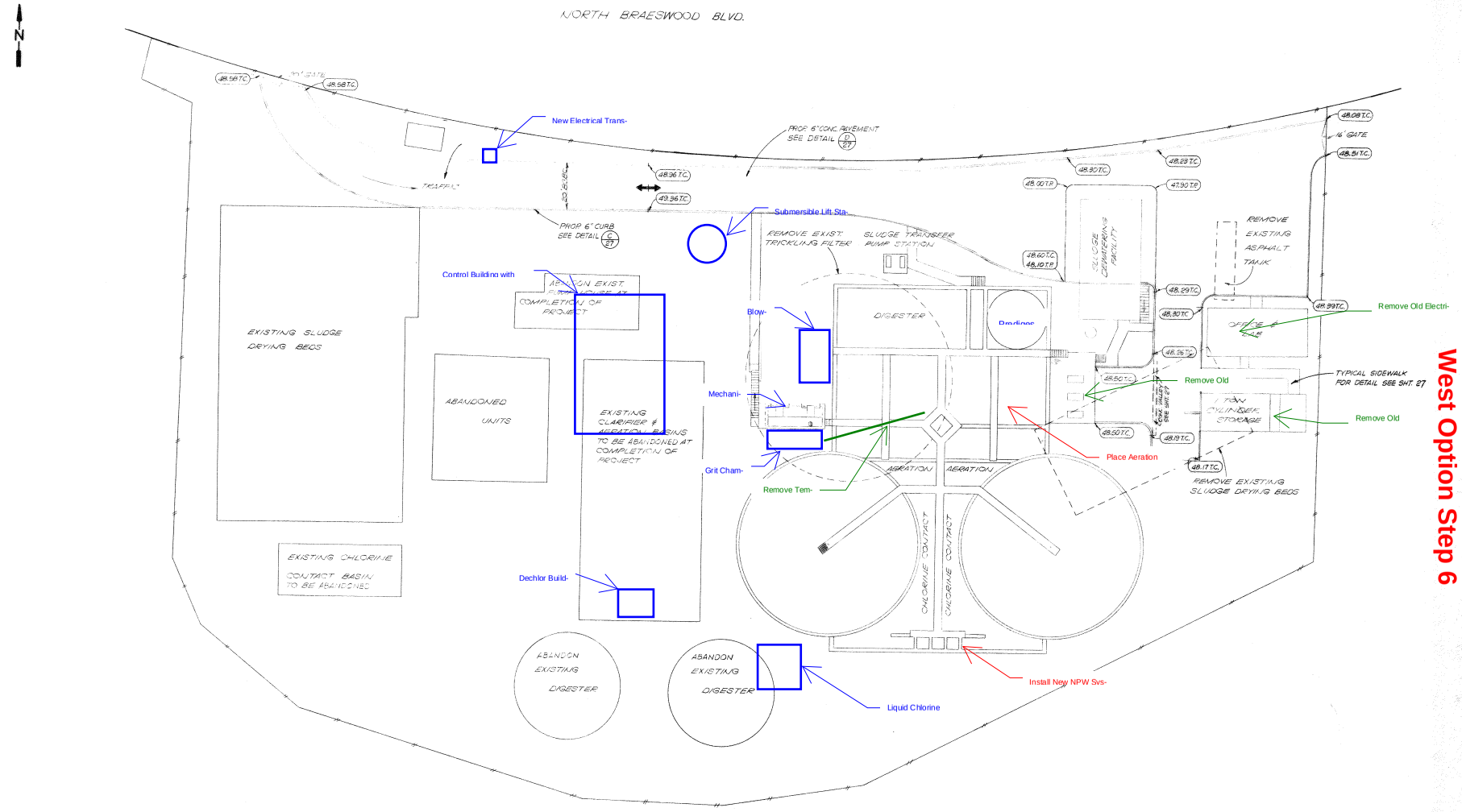

West Option Step 6

No.	Revision	Date	No.	Revision	Date

BEI

BAYSHORE ENGINEERS, INC.
CONSULTING ENGINEERS
P. O. BOX 627
DEER PARK, TEXAS 77536

Scale: 1" = 20'
Dwn. By: M.G. Date: 9/80
Chkd. By: MEC Date:

WEST UNIVERSITY PLACE
SEWAGE TREATMENT PLANT
PLOT PLAN

Project No: 31-01-78
Drawing No:
Sheet 2 of 40